50 FOUNTAIN STREET, MANCHESTER

DRAINAGE CONDITION DISCHARGE REPORT

Project No: 2006-05

November 2026

Rev: P01

FSM-REN-XX-XX-RP-C-00003

This report has been prepared for the sole benefit, use and information of M&G Real Estate for the purposes set out in the report or instructions commissioning it. The liability of **renaissance** in respect of the information contained in the report will not extend to any third party. This document should not be used in whole or part by any third parties without the express written permission of **renaissance**. If any unauthorised third party comes into possession of this report, they rely on it at their own risk and **renaissance** do not owe them any Duty of Care.

Author **James Albert**
BEng

Date **11.11.2026**

Approved **Andy Mclaughlin**
CEng, MIStructE

Date **11.11.2026**

Contact Details:
2nd Floor Tribeca House, Dale Street
Manchester, M1 1EY
t: 0161 393 6509

Rev.	Description	Author	Checked	Date
P01	First Issue	J Albert	A Mclaughlin	11.11.2026

CONTENTS

1. INTRODUCTION 1
1.1 Purpose of this Report 1
1.2 Condition 10 1
2. SITE & DEVELOPMENT 2
2.1 Site Description 2
2.2 Existing Drainage 2
2.3 Proposed Development 2
3. EXISTING & PROPOSED SURFACE WATER DISCHARGE RATES 3
3.1 Pre-Development Surface Water Run-Off Rates 3
3.1.1 Existing Brownfield Run-Off Rates 3
3.1.2 Greenfield Run-Off Rates 3
3.2 Proposed Surface Water Discharge Rates & Attenuation Requirements 4
4. SURFACE WATER DRAINAGE HIERARCHY 5
4.1 Drainage Hierarchy 5
5. ATTENUATION AND SUDS ASSESSMENT 7
5.1 Attenuation requirements 7
5.2 Sustainable Urban Drainage Assessment 7
5.3 Water Quality Assessment 8
5.4 SuDS Maintenance and Management Plan 10
6. DRAINAGE STRATEGY 12
6.1 Surface Water System 12
6.2 Foul Water System 12

APPENDIX A – TOPOGRAPHICAL SURVEY
APPENDIX B – UTILITY AND DRAINAGE SURVEY
APPENDIX C – UNITED UTILITIES SEWER MAP
APPENDIX D – EXISTING DRAINED AREAS PLAN
APPENDIX E – PROPOSED DEVELOPMENT PLANS
APPENDIX F – BELOW GROUND DRAINAGE DRAWINGS
APPENDIX G – GREENFIELD RUN-OFF CALCULATIONS
APPENDIX H – BROWNFIELD RUN-OFF CALCULATIONS
APPENDIX J – SURFACE WATER DRAINAGE CALCULATIONS
APPENDIX K – UNITED UTILITIES CORRESPONDENCE

1. INTRODUCTION

1.1 Purpose of this Report

This Drainage Condition Discharge Report has been prepared on behalf of M&G Real Estate in relation to the redevelopment of 50 Fountain Street.

A Flood Risk Assessment and Drainage Strategy were previously prepared in support of the planning application. The Drainage Strategy, reference FSM-REN-00-ZZ-RP-C-00002, dated August 2021, established the fundamental principles of the proposed surface water and foul drainage arrangements.

This report has been prepared specifically to provide the detailed drainage information required to discharge Condition 10 of planning permission 131859/FO/2021.

The drainage design has developed since submission of the planning application in accordance with detailed design development, renewed pre-development enquiry correspondence with United Utilities (UU) and to align with the latest National Planning Policy Framework (NPPF). This report therefore supersedes the drainage proposals contained within the August 2021 Drainage Strategy where specifically identified.

In particular:

- The below ground drainage network level has been raised to discharge via gravity into the public sewer network;
- the discharge location into Concert Lane has been relocated further upstream along the public sewer to suit a revised basement layout;
- connection into the existing public sewer in concert lane is proposed via a new manhole;
- the discharge rate into the public sewer network has been decreased to 2.0 l/s to suit UU's pre-development enquiry agreement;
- additional attenuation storage has been provided in the form of below ground attenuation tanks beneath the building to suit the reduced discharge rate and the latest climate change allowances.

1.2 Condition 10

"No development shall commence until a surface water drainage scheme for the site, based on sustainable drainage principles, the hierarchy of drainage options in the National Planning Practice Guidance, and an assessment of the hydrological and hydrogeological context of the development, has been submitted to and approved in writing by the City Council as Local Planning Authority. The surface water drainage scheme must be in accordance with the Non-Statutory Technical Standards for Sustainable Drainage Systems (March 2015) or any subsequent replacement national standards.

The drainage scheme shall subsequently be implemented in accordance with the approved details before the development is completed.

Reason - To promote sustainable development, secure proper drainage and to manage the risk of flooding and pollution, pursuant to policies EN8 and EN14 of the Manchester Core Strategy."

Since determination of the planning application, the national drainage standards and the National Planning Policy Framework have been updated. The drainage proposals have therefore been reviewed against the current National Standards for Sustainable Drainage Systems and current NPPF, in addition to the specific requirements of Condition 10.

2. SITE & DEVELOPMENT

2.1 Site Description

The site is circa 0.115 hectares and is currently used for office premises built from brick and stone construction. The building is 5 storeys in height and has a basement/semi-basement across the footprint ranging from 1.25m to 3.00m in depths which is used for car parking and houses an electricity substation. There are some trees present towards the south of the building, along Fountain Street.

The site is generally flat in level, as can be seen from the Topographical survey in Appendix A, however access to the building from Fountain Street is higher in level than the surrounding pavement.

The site is set within a largely commercial district with office buildings, banks and restaurants surrounding the site. All site boundaries are open, Concert Lane bounds the site to the north, Fountain Street to the south and Spring Gardens to the west. The eastern boundary is defined by the adjacent office buildings.

There are currently no access restrictions at the site. Access to the building can be obtained from Concert Lane to the north or Fountain Street to the south. No access can be gained from Spring Gardens to the west.

2.2 Existing Drainage

The existing site is 100% impermeable with associated existing drainage, as shown by the Drainage Survey in Appendix B. Based on an assessment of the development site and the utility survey drawing the existing foul and surface water from the site discharges to the United Utilities (UU) combined sewer along Concert Street.

Refer to Appendix C for the existing combined United Utilities network surrounding the site.

2.3 Proposed Development

Retention and refurbishment of the Grade II Listed 49 Spring Gardens façade following demolition of the existing 50 Fountain Street building and erection of adjoining 8 storey commercial building (Use Class E) with basement areas, roof terraces and plant enclosure, landscaping, and associated works.

The proposed development plans can be seen in Appendix E.

3. EXISTING & PROPOSED SURFACE WATER DISCHARGE RATES

3.1 Pre-Development Surface Water Run-Off Rates

The existing development site area is 1,151m^2 (0.115ha) and is considered 100% impermeable in its current condition and is positively drained via the onsite network.

Refer to Appendix D for Existing Drained Areas Plan.

3.1.1 Existing Brownfield Run-Off Rates

To estimate the pre-development surface water discharge into the existing public sewer the existing onsite network has been simulated using industry approved Micro Drainage Software assuming a critical 60-minute storm. The calculations can be seen in Appendix H with the main results presented in the Table 3.1. The model is based on the existing drainage survey that can be seen in Appendix B.

For comparison the total surface water discharge based on a constant rainfall intensity of 50mm/hr (0.0139 l/s/m^2) has been calculated. For the site this equates to an existing peak discharge run-off of 15.7 l/s based upon an impermeable area of 1,151m^2.

The pre-development run-off rates for the 1-, 2-, 30-and 100-year events and 50mm/hr rainfall intensity are therefore: -

Return Period	$Q_{Brownfield}$ (l/s)
1 in 1 year	8.9
1 in 2 year	11.4
1 in 30 year	22.7
1 in 100 year	29.8
$Q_{50mm/hr}$	15.7

Table 3.1 – Brownfield Run-off Rates

3.1.2 Greenfield Run-Off Rates

Greenfield run-off rates have been calculated using HR Wallingford's online Greenfield runoff rate estimation tool, which estimates Q_{BAR} as 0.7 l/s for the proposed development area at 50 Fountain Street.

The calculated green field run-off rates are present in the below table and calculations can be found in Appendix G.

Return Period	$Q_{Greenfield}$ (l/s)
Q_{bar}	0.7
1 in 1 year	0.6
1 in 2 year	0.7
1 in 10 year	1.0
1 in 30 year	1.3
1 in 100 year	1.5

Table 3.2: Greenfield Run-off Rates

3.2 Proposed Surface Water Discharge Rates & Attenuation Requirements

Consideration has been given to reducing the proposed discharge rate to Greenfield run-off rates however, this is not practicable given the site constraints which include size of site, limitations on infiltration due to interaction with foundations, blockage risks associated with very low flow rates and the proximity to listed buildings and basements.

In accordance with clauses 3.21 and 3.21.1 of the National standards for sustainable drainage systems (SuDS), a relaxation factor of up to 5 can be applied if the greenfield run-off rate cannot be achieved. Therefore, attenuation storage requirements for various run-off rates were reviewed against the spatial constraints of the site and it was concluded that a feasible run-off rate for the proposed development is 2.0 l/s, effectively a relaxation factor of 2.86.

United Utilities have confirmed it is acceptable, via a pre-development enquiry, for surface water to discharge at a rate of 2.0 l/s into the combined sewer within Concert Lane. Refer to Appendix K for United Utilities correspondence.

The post development discharge rates will include for an increase in the rainfall intensity of 40% and 45% for the 3.3% and 1% annual exceedance probability (AEP) respectively, to allow for climate change as is consistent with a design life of the development of 100 years, as outlined by the National Planning Practice Framework (NPPF).

To comply with the Non-Statutory Technical Standards for Sustainable Drainage: Practice Guidance the runoff volume for the post development 1 in 100 year 6 hour rainfall event will not exceed the pre-development runoff volume as the Brownfield runoff rates have been reduced at least 50%.

The total allowable discharge from the site is to be limited to 8.0 l/s, which results in a 64% betterment on the 1 in 30 year discharge rate and a 73% betterment for the 1 in 100 year discharge rate. The proposed discharge rate is subject to confirmation by United Utilities and Manchester City Council.

4. SURFACE WATER DRAINAGE HIERARCHY

4.1 Drainage Hierarchy

The runoff destination hierarchy has been assessed in accordance with current national planning guidance and the National Standards for Sustainable Drainage Systems.

The hierarchy requires runoff destinations to be considered in the following order:

- Priority 1: collected for non-potable use;
- Priority 2: infiltrated to ground;
- Priority 3: discharged to an above ground surface water body;
- Priority 4: discharged to a surface water sewer, or another piped surface water drainage system;
- Priority 5: discharged to a combined sewer

A lower-priority destination should only be adopted where higher-priority destinations are not reasonably practicable.

Rainwater Collection and Reuse

As set out within the National Standards for Sustainable Drainage Systems (SuDS) Standard 1.11, rainwater harvesting systems are to be considered where:

1. There is a demand for non-potable water and available contributing catchment area that will deliver safe and efficient water savings.
2. There is a need for landscape irrigation.
3. The development is in an area identified as seriously water stressed.

The contributing catchment available for rainwater harvesting systems is fixed by the building footprint. The ability of such a catchment to serve the non-potable demand of the building decreases with each floor added. In the case of 50 Fountain Street, the yield generated at roof level would likely struggle to meet the demand at each of the 8 serviceable floors (7 storeys plus mezzanine), meaning the system would be highly ineffective and inefficient.

Given the spatial constraints of the site as a city centre location, there is no need for rainwater harvesting systems for irrigation purposes due to the limited provision of soft landscaping areas.

Finally, as per the Environment Agency's Water stressed areas – final classification 2021, the development is not within an area identified as seriously water stressed.

For the reasons presented above, rainwater harvesting is therefore not considered to be feasible for the 50 Fountain Street development and thus is not intended to form part of the overall surface water drainage strategy.

Infiltration to Ground

Infiltration direct to the ground has been considered, however as the existing building and proposed new building will cover the whole site it is not possible to infiltrate surface water to the ground without impacting the foundations. The site is also surrounded on three sides by Grade II* and Grade II listed buildings which include semi and full basements. Infiltration is therefore not viable.

Surface Water Body

Opportunities to discharge to watercourse have been considered, however as the nearest watercourse 480m away it is deemed not viable.

Surface Water Sewer

There are no surface water drains within the highway around the site, therefore, discharge to the public surface water sewer, as the current situation, has been discounted.

Combined Sewer

There are multiple existing United Utilities combined sewers in the surrounding highways. It has been confirmed via a CCTV survey that the site has a current connection to the combined sewer present within Concert Lane. It is therefore proposed that surface water will discharge to the existing public combined sewer within Concert Lane, utilising the existing connection is possible.

5. ATTENUATION AND SUDS ASSESSMENT

5.1 Attenuation requirements

The proposed development results in circa 0.115 ha of building footprint.

Due to the nature of the development, urban creep has not been considered as the percentage of impermeable area cannot increase during the lifetime of the development.

The post development discharge rates will include for an increase in the rainfall intensity of 40% and 45% for the 3.3% and 1% annual exceedance probability (AEP) respectively, to allow for climate change as is consistent with a design life of the development of 100 years, as outlined by the National Planning Practice Framework (NPPF).

5.2 Sustainable Urban Drainage Assessment

Table 4.1 below provides a summary of typical SUDs techniques outlined within CIRIA guide 753 SUDs manual. Based on a review of the suitability of the SUDs techniques it is proposed that the development at 50 Fountain Street will incorporate the following:

- Adopt blue roof for building roof and level 07 terrace.
- Provide a flow control & underground storage to limit runoff to acceptable limits.

Based on a review of the suitability of the SuDS techniques it is proposed that the development incorporates the following:

SUDS Technique	Description	Suitability for Development Sites	
Rainwater Harvesting	Collection of rainwater run-off for use	Not suitable due to spatial constraints of the proposed development.	×
Soft Landscaping	Grassed areas that allow direct infiltration of rainwater	Not suitable due to no provision of grassed area.	×
Filter Drains	Granular filled Linear drains / soakaway with either granular fill and perforated pipe, or dense vegetation that treat runoff from adjacent impermeable areas	Not suitable due proximity of listed buildings.	×
Swales	Shallow landscape channel that can infiltrate or convey runoff.	Not suitable due to proximity of listed buildings and site layout.	×
Infiltration Basins	Depressions in the ground designed to store and infiltration runoff to the ground. Can be landscaped to provide amenity value.	Not suitable due to proximity of listed buildings and site layout.	×
Wet Ponds	Basins with permanent pool of water providing water quality treatment, wildlife, and amenity benefit. Designed to provide temporary storage for additional runoff.	Not suitable due to proximity of listed buildings and site layout.	×
Extended Detention Basins	Dry basins that are designed to temporarily store runoff providing water quality treatment.	Not suitable due to proximity of listed buildings and site layout.	×
Constructed Wetland	Ponds and shallow wetland areas with vegetation to improve pollution removal and enhance wildlife habitat.	Not suitable due to proximity of listed buildings and site layout.	×
Porous Paving	Granular build-up beneath permeable paving systems that can be used to either store runoff (lined system) and	Not suitable due to proximity of listed buildings and no proposed external areas.	×

	increase time of concentration or allow percolation into the ground.		
Trees Pits	Managed permeable paving systems around tree pits that can be used to either store runoff (lined system) and increase time of concentration or allow percolation into the ground.	Not suitable due to proximity of listed buildings and no proposed external areas.	×
Soakaways	Infiltration device to temporarily store runoff and allow it to percolate into the ground.	Not suitable due to proximity of listed buildings and site layout.	×
Green Roof	Vegetated roof area that reduces runoff and increases time of concentration.	Not viable due to plant and access.	×
Blue Roof	**Roof area designed to store and reduce peak runoff rates during intense storms.**	**Suitable to the roof area.**	✓
Underground Storage	**Attenuation structures installed below ground to provide runoff storage.**	**Suitable**	✓

× Not suitable ? Potentially suitable subject to further investigation ✓ Suitable

Table 6.1 – SuDS Techniques & Suitability for Development Site

5.3 Water Quality Assessment

Water quality is generally affected by frequent rainfall events, 1 in 1-year events or less. To assess the water quality consideration will be given to the guidance with CIRIA Guide C753 The SuDS Manual. The pollution hazard levels for different land uses are presented in the table below.

Land Use	Pollution Hazard Level	Total Suspended Solids	Metals	Hydro-carbons
Residential Roofs	Very Low	0.2	0.2	0.05
Other roofs (typically commercial/ industrial roofs)	Low	0.3	0.2 (up to 0.8 where there is potential for metals to leach from the roof)	0.05
Individual property driveways, residential car parks, low traffic roads (eg cul de sacs, homezones and general access roads) and non-residential car parking within infrequent change (eg schools, offices) ie <300 traffic movements/day	Low	0.5	0.4	0.4
Commercial yard and delivery areas, non-residential car parking with frequent change (eg hospitals, retail), all roads except low traffic roads and trunk roads/motorways	Medium	0.7	0.6	0.7
Site with heavy pollution (eg haulage yards, lorry parks, highly frequented lorry approaches to industrial estates,	High	0.8	0.8	0.9

waste sites), site where chemical and other fuels (other than domestic fuel oil) are to be delivered, handled, stored, used or manufactured, industrial sites; trunk roads and motorways				

Table 6.2 – Pollution Hazard Levels

As the site will be completely covered by the building footprint the Pollution Hazard Level is considered as very low with the primary consideration given to removal of larger debris like leaves, feathers etc. that could cause a blockage.

Based on the above assessment the roof areas have a very low pollution hazard and the receiving sewer is considered as normal surface water. No treatment stages are therefore required.

The adoption of SUDs as noted and good practice will provide inherent treatment. Areas of blue roofs, dependant on detailing, will act to absorb most frequent rainfall events and filter out solids and sediment. Sumps will also be provided to any gullies and channels provided at the ground floor level. Additionally, silt traps and sumps will allow most of the sediment and solids to settle out under low flows, prior to discharging to the sewer.

5.4 SuDS Maintenance and Management Plan

In order to ensure the ongoing functioning of the below ground drainage networks a suitable maintenance strategy is to be adopted to ensure the drainage network is cleaned regularly and the routine maintenance and cleansing regime should be documented.

The following operation and maintenance requirements for the SuDS features incorporated into the development are to be adopted by the maintenance company. These requirements are general and have been extracted from the CIRA Guide C753.

The Main Contractor delivering the development is to update the general requirements to reflect the product specific requirements of the as installed proprietary SuDS and incorporate these into the Operation & Maintenance manual for the building. A Verification Report, including photographic evidence, to demonstrate that the drainage has been constructed as per the design drawings. As-built drawings should be supplied by the Main Contractor where the construction of the drainage varies from the design drawings.

Maintenance Schedule	Required Action	Typical Frequency
Regular Maintenance	Inspect and identify any areas that are not operating correctly. If required, take remedial action	Monthly for 3 months, then annually
	Remove debris from the catchment surface (where it may cause risks to performance)	Monthly
	For systems where rainfall infiltrates into the tank from above, check surface of filter for blockage by sediment, algae or other matter; remove and replace surface infiltration medium as necessary	Annually
	Remove sediment from pre-treatment structures and/ or internal forebays	Annually, or as required
Remedial Actions	Repair/ rehabilitate inlets, outlets, overflows and vents	As required
Monitoring	Inspect/ check all inlets, outlets, vents and overflows to ensure that they are in good condition and operating as designed	Annually
	Survey inside of tanks for sediment build-up and remove if necessary	Every 5 years or as required

Table 6.4 - Operation and Maintenance requirements for Attenuation Storage Tanks (Table 21.3 'The SuDS Manual C753)

Maintenance Schedule	Required Action	Typical Frequency
Regular inspections	Inspect all components including soil substrate, vegetation, drains, irrigation systems (if applicable, membranes and roof structure for proper operation, integrity of waterproofing and structural stability	Annually and after severe storms
	Inspect soil substrate for evidence of erosion channels and identify any sediment sources	Annually and after severe storms
	Inspect drain inlets to ensure unrestricted runoff from the drainage layer to the conveyance or roof drain system	Annually and after severe storms
	Inspect underside of roof for evidence of leakage	Annually and after severe storms
Regular maintenance	Remove debris and litter to prevent clogging of inlet drains and interference with plant growth	Six monthly and annually or as required
	During establishment (ie year one), replace dead plants as required	Monthly (but usually responsibility of manufacturer)
	Post establishment, replace dead plants as required (where >5% of coverage)	Annually (in autumn)
	Remove fallen leaves and debris from deciduous plant foliage	Six monthly or as required
	Remove nuisance and invasive vegetation, including weeds	Six monthly or as required
	Mow grasses, prune shrubs and manage other planting (if appropriate) as required – clippings should be removed and not allowed to accumulate	Six monthly or as required
Remedial Actions	If erosion channels are evident, these should be stabilised with extra soil substrate similar to the original material, and sources of erosion damage should be identified and controlled	As required
	If drain inlet has settled, cracked or moved, investigate and repair as appropriate	As required

Table 6.4 - Operation and Maintenance requirements for Green Roofs (also applies to Blue Roofs) (Table 12.5 'The SuDS Manual C753)

6. DRAINAGE STRATEGY

6.1 Surface Water System

The surface water drainage is to collect the rainwater from the proposed building within a dedicated surface water network. The system is to then discharge under gravity to the United Utilities combined sewer present within Concert Lane subject to agreement with the LLFA and UU. The proposed below ground drainage drawing is presented in Appendix F.

The surface water discharge from the site is to be limited to 2.0 l/s, as agreed with United Utilities via pre-development enquiry, using a flow control device within the final manhole on site prior to discharge into the sewer. Refer to Appendix K for UU pre-development enquiry correspondence.

Attenuation will be provided in the form of blue roofs at the level 07 terrace and roof level along with below ground attenuation tanks beneath the building footprint. Refer to Appendix F for Below Ground Drainage Drawing.

The surface water discharging from the site will be from the building roofs and terraces only. To ensure water quality and that the blue roofs function correctly, they must be maintained as set out in the SUDS management plan.

The surface water drainage network is to be designed in accordance with Building Regulation Part H, BS EN 752 and the 'Codes for Adoption'. In addition, the following requirements will also be adopted in accordance with the Non-Statutory Technical Standards for Sustainable Drainage: Practice Guidance and Manchester City Councils SUDS requirements for new developments:

- No surcharging of drainage network for design storm of 1 in 2 years.
- The drainage system will be designed to ensure flooding does not occur on site for both the 1 in 30 year +40% climate change allowance, and 1 in 100 year +45% climate change allowance.

Surface water network hydraulic calculations can be found in Appendix J.

The new drainage connection will be subject to a Section 106 application under the water industry act.

6.2 Foul Water System

The foul water drainage from the offices, shower rooms, plant areas, and washdown gullies will be collected by a dedicated gravity foul network. The system is to be connected to the existing combined sewer in Concert Lane via a new combined manhole.

The foul drainage network will remain separate from the proposed surface water systems upstream of the final connection.

The new foul drainage connection will be subject to a Section 106 application under the water industry act.

The foul system has been designed in accordance with:

- Building Regulations Approved Document H;
- BS EN 752; and
- applicable Water UK/Sewer Sector Guidance.

Refer to Appendix F for Below Ground Drainage Drawings

APPENDIX A

TOPOGRAPHICAL SURVEY

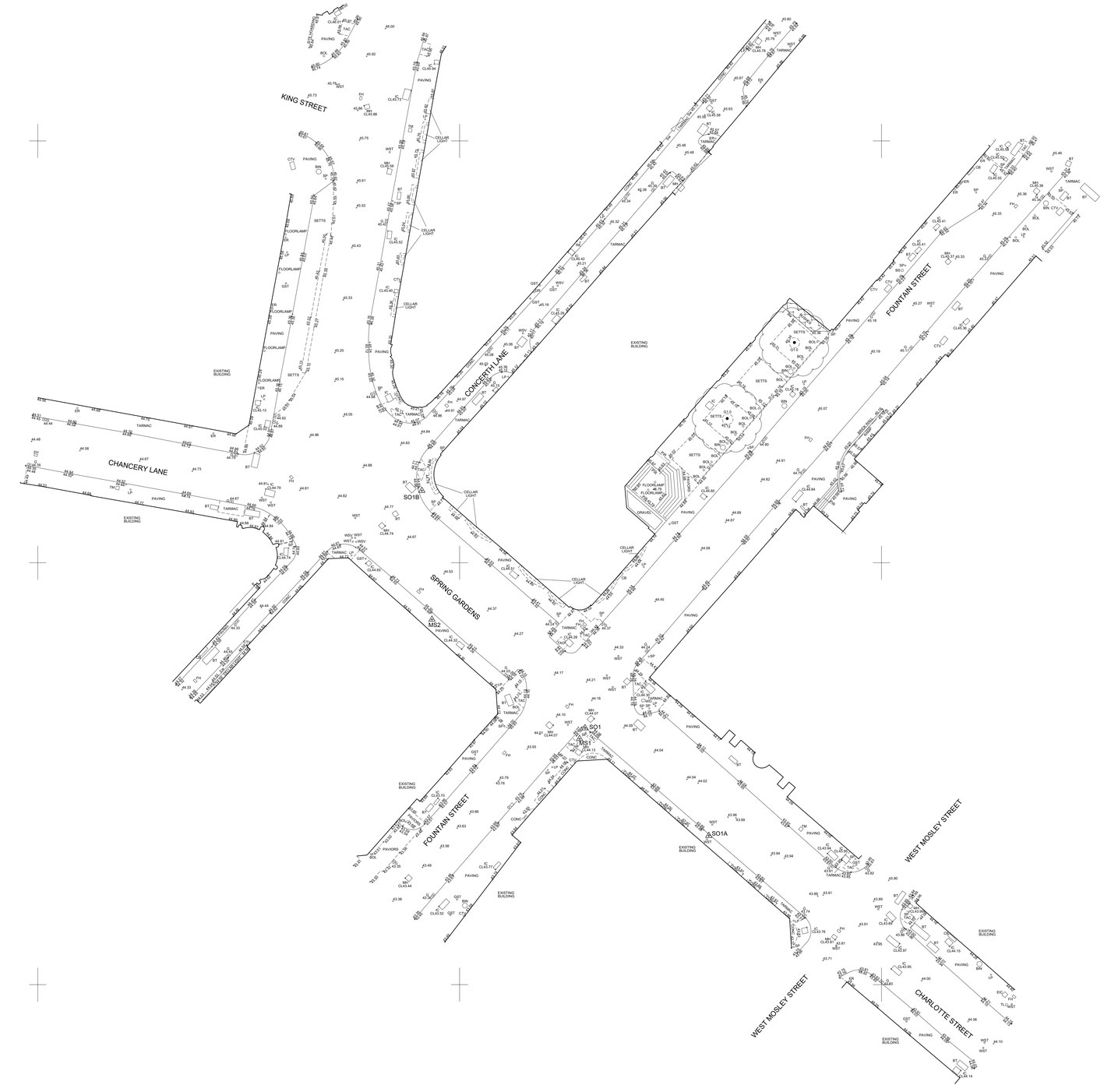

© Survey Operations Limited 2021
Reproduction in whole or in part by any means is prohibited without the prior permission of Survey Operations Limited.

N

Note:
The survey is plotted on a plane local Grid. Orientation to National Grid.
All levels relate to Ordnance Datum, achieved using the OS National GPS Network.

Survey Control Markers established for Mapping purposes only and should not be used for Construction without the written approval of Survey Operations Ltd.

SURVEY STATIONS

Name	Easting	Northing	Height
SO1	384064.87	398180.41	44.18
SO1A	384079.53	398167.66	43.89
SO1B	384045.52	398208.56	44.72
MS2	384046.72	398193.28	44.42
MS1	384064.22	398179.14	44.11

STANDARD REFERENCE & ABBREVIATIONS

(AM).....Assumed Route
AB.....Air Brick
AV.....Air Valve
B/W.....Barbed Wire
BAR.....Barrier
BD.....Bollinhe Beacon
BH.....Borehole
BL.....Bed Level
BOL.....Bollard
BS.....Bus Stop
BT BOX.....British Telecom Box
BT.....British Telecom IC
BRTW.....Brick Retaining Wall
BW.....Brick Wall
C/B.....Close Boarded
C/I.....Corrugated Iron
C/P.....Chestnut Paling
CB.....Control Box
CBW.....Concrete Block Wall
CCTV.....Closed Circuit TV
CD.....Cable Duct
CL.....Cellar Light
CL/L.....Chain Link
CHM.....Chimney
CL.....Cover Level
CM.....Cable Marker
COL.....Column
CONC.....Concrete
CP.....Cable Pit
CRTW.....Concrete Retaining Wall
CTV.....Cable Television
CUL.....Culvert
CW.....Concrete Block Wall
DC.....Drainage Channel
DPC.....Damp Proof Course
DR.....Drain
DRW.....Dry Stone Wall
ECP.....Electricity Cable Pit
EJC.....Expansion Joint
EM.....Electricity Junction Box
EL SUB STN..Electricity Sub Station
ES.....Eaves Level
ELB.....Electricity Box
EP.....Electricity Pole
ER.....Earth Rod
ETL.....Electricity Transmission Line
FB.....Flower Bed
FH.....Fire Hydrant
FL.....Floor Level
FP.....Flagpole
G*.*.....Girth (of tree)
G.....Gulley
GAB.....Gabion
GCP.....Gas Inlet Pipe
GMKR.....Gas Marker
GST.....Gas Stop Tap (Domestic)
GSV.....Gas Stop Valve (Mains)
HSE.....Housing
HT.....Height
HV.....High Voltage
I/R.....Iron Railing
IC.....Inspection Cover
IL.....Invert Level
IP.....Inlet Pipe
KO.....Kerb Outlet
LB.....Letter Box
LP.....Lamp Post
MBL.....Multi-Girth
MH.....Manhole
MMR.....Marker
MP.....Mooring Point
NP.....Street Name Plate
O/H.....Overhead
O/P.....Open Paling
OE.....Overhead Electric Wire
OP.....Outfall Pipe
OSBM.....Ordnance Survey Bench Mark
OT.....Overhead Telecom Wire
P/C.....Post & Chain
P/R.....Post & Rail
P/W.....Post & Wire
PAV.....Paving
PB.....Pillar Box
PC.....Pedestrian Crossing
PP.....Petrol Pump
PT.....Post or Pillar
RE.....Rodding Eye
RS.....Road Sign
RTW.....Retaining Wall
RWP.....Rain Water Pipe
SAP.....Sapling
SL.....Sump Level
SW.....Soffit Level
SP.....Sign Post
SPL.....Springing Level
SRTW.....Stone Retaining Wall
SV.....Stop Valve (unspecified)
SVP.....Soil Vent Pipe
SW.....Stone Wall
TAC.....Tactile Paving
TB.....Traffic Bollard
TBM.....Temporary Bench Mark
TCB.....Telephone Call Box
TPR.....Taken From Records
TIE.....Anchor Point (Masts/Poles)
TL.....Traffic Light
TLB.....Traffic Light Control Box
TM.....Ticket Machine
TMC.....Tarmac
TP.....Telecommunications Pole
TPIT.....Trial Pit
TS.....Trade Screen
U/C.....Under Construction
U/G.....Underground
UTL.....Unable to Lift (BH,IC etc)
UTS.....Unable to Survey
VDP.....Vehicle Detector Pad
VP.....Vent Pipe
W/M.....Wire Mesh
WL.....Water Level
WM.....Water Meter
WN.....Wash Out
WP.....Waste Pipe
WST.....Water Stop Tap (Domestic)
WSV.....Water Stop Valve (Mains)

Survey Operations
Smith Street, Skelmersdale, Lancs. WN8 8LN
Tel: 01695 725662 Fax: 01695 51816
Email: mail@survops.co.uk — www.survops.co.uk

Client
Chroma Consulting UK Limited

Drawing Title
Topographical Survey of Land at:
50 Fountain Street
Manchester

Scale(s)	1:200	Surveyor	DC
Date	JAN 21	Drawn	JR
Job Number	20L115	Checked	TP

Sheet Size & Drg Number & Revision
A0 20L115/001

APPENDIX B

UTILITY AND DRAINAGE SURVEY



BURIED ASSETS DETECTED ON SITE:

LINETYPE		SERVICE DESCRIPTION
BT	BT	TELECOMMUNICATIONS (BT)
CATV		TELECOMMUNICATIONS (CATV)
TELE		TELECOMMUNICATIONS (OTHER)
G	G	GAS
TCSU		TRAFFIC CONTROL SENSOR UNIT
SL	SL	STREET LIGHTING
LV		LOW VOLTAGE
HV		HIGH VOLTAGE
W	W	WATER
FWD		FOUL WATER DRAINAGE
SWD		SURFACE WATER DRAINAGE
FWRM		FOUL WATER RISING MAIN
CS		COMBINED SEWER
OF		OIL/FUEL
		SUSPENDED RAINWATER PIPE
U(GPR)		UNKNOWN UTILITY (GPR)
U(EML)		UNKNOWN UTILITY (RADIO)

EOT END OF TRACE A/R ASSUMED ROUTE

UTD UNABLE TO OBTAIN DEPTH DUE TO FEINT SIGNAL

TFR TRANSFERRED FROM RECORDS

KEY DIMENSIONS SHOULD BE CHECKED ON SITE BEFORE COMMENCEMENT OF ANY WORKS

Amendments			
	Date	Surveyor	Description of work

Lanes Group plc

Meridian House
58/60 Hillside Road, Frodsham, Cheshire WA6 6AG
Tel: 01928 734473 Fax: 01928 735573
Email: mail@powerstiltman.co.uk
www.powerstiltman.co.uk

50 Fountain Street

Manchester

Drainage Survey

Client : Lanes Group

Surveyed By : CS	Date : 24/03/21	A0 @ 1:200
Drawn By : CS	Drawing No : 8780/01	
Checked By : ****	Amendment : ****	

APPENDIX C

UNITED UTILITIES SEWER MAP

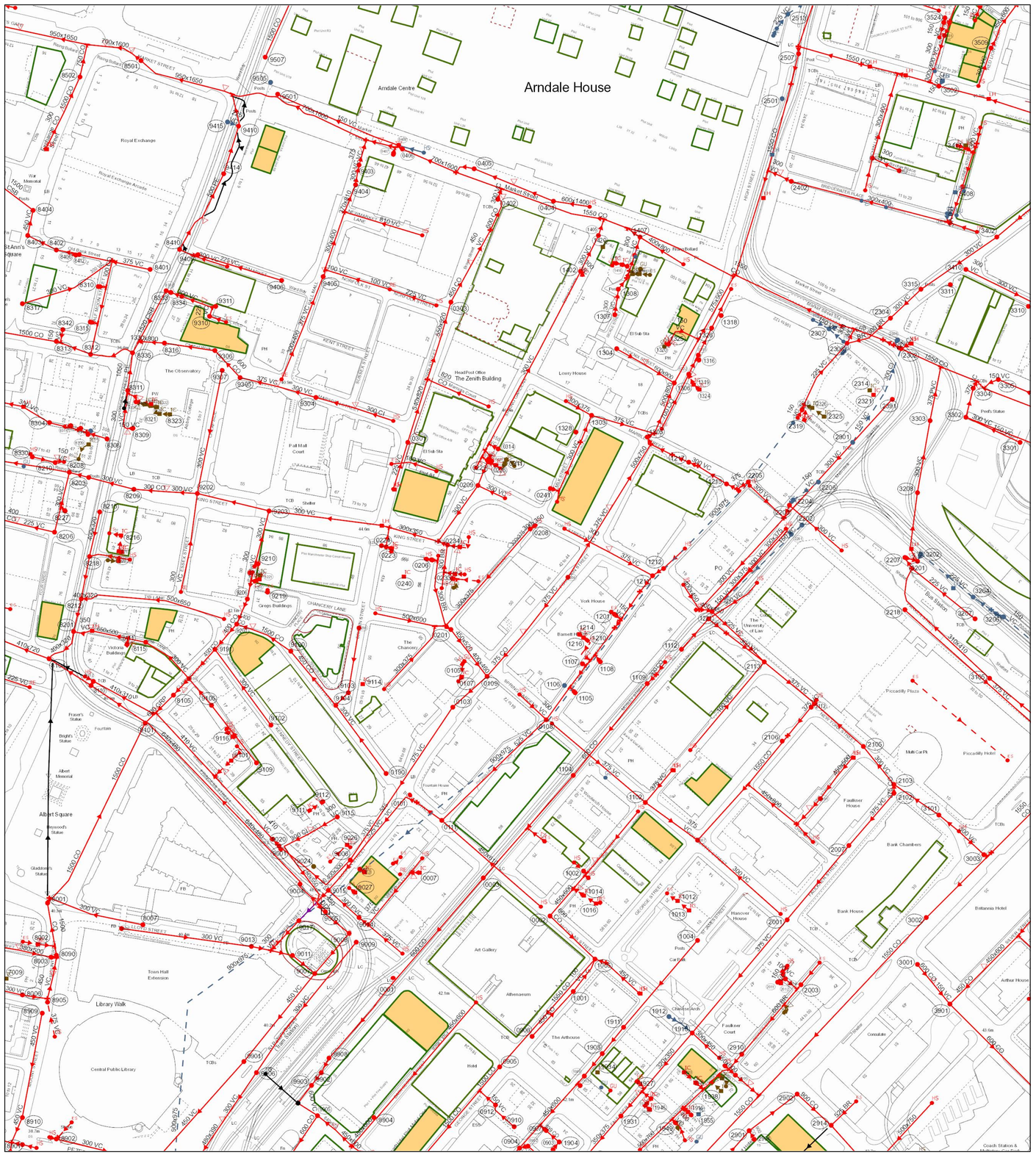

Refno	Cover	Func	Invert	Size x	Size y	Shape	Matl	Length	Grad
1212	44.72	CO	40.02	375			VC	7.211102	1 in 361
2405	45.87	CO	0	300			VC	16.55295	
1221	44.78	CO	40.76	225			VC	20.51828	1 in 20
0407	40.62	CO	31.03	225			VC	4.123106	
8105	40.38	CO	35.19	600			GRP	22.22377	1 in 47
2204	44.75	SW	43.92	150			VC	1.414214	1 in 1
9219		CO		150			VC	1.277161	
8330		CO		100			VC	13.17195	
8001	40.32	CO	35.23	1500			CO	3.162278	
9006	41.76	CO	38.86	400			VC	52.9587	1 in 22
0101	42.33	CO	39.02	525			VC	34.05877	1 in 110
1906	42.05	CO	39.56	450			BR	53.8145	
8106	40.62	CO	36.63	450			VC	6.142605	1 in 27
9190	42.4	CO	37.69	1500			CO	24.35539	
8309		CO		150			VC	3.056886	
3207	45.24	CO	43.52	225			VC	44.82187	
1906		CO		0			UN	15.93075	
3509	46.1	CO	42.64	440			BR	6.708204	
8401	37.17	CO	28.79	375			VC	40.28788	1 in 204
0001	41.79	CO	37.67	600			CO	55.16547	
2391	44.66	CO	0	300			VC	89.19641	
1201		CO		150			VC	4.736042	
1904		CO	0	939			CO	9.508459	
8310		CO		150			VC	4.474856	
9115	41.29	CO	38.62	300			VC	17.49286	1 in 194
3315	44.45	CO	42.06	300			VC	23.34524	1 in 78
2306	44.07	CO	41.7	300			VC	8.944272	
2102	44.44	CO	39.04	375			VC	38.28838	
8203	37.8	CO	32.62	400			VC	11.07758	1 in 58
2304	44.23	CO	41.74	300			BR	16.27862	
3001	44.05	CO	0	600			CO	14.21267	
1206	45.27	CO	0	375			VC	40.60788	
8905	39.82	CO	36.02	375			VC	2	
9410	38.23	CO	28.36	500			PE	18.14539	1 in 107
3206	45.19	SW	42.79	225			VC	3.162278	
9005	41.23	CO	34.35	450			VC	18.04156	1 in 113
3505	45.99	CO	41.41	300			VC	13.60147	
8910		CO	0	450			VC	15.23155	
8334		CO		300			VC	6.37267	
8104	39	CO	32.26	410			BR	27.92051	
9307	38.74	CO	35.62	300			VC	69.73816	1 in 61
1102	43.99	CO	38.59	375			VC	35.80503	1 in 16
9020	40.82	CO	37.95	400			VC	5.272538	1 in 3
0904	41.33	CO	37.89	450			BR	59.5483	1 in
8215	38.29	CO	35.26	400			VC	25.46346	1 in 31
0405	42.15	CO	28.53	700			BR	11.70457	
8902	39.04	CO	33.7	300			VC	55.54278	1 in 40
3101	44.68	CO	39.42	300			VC	30.23243	1 in 62
8315		CO		150			VC	4.180113	
2218		CO	0	375			VC	121.8277	
8227		CO		150			VC	3.213574	
1304	45.47	CO	40.73	500			BR	18.35756	1 in 63
2305	44.3	CO	0	1550			CO	3.605551	
9013	40.37	CO	34.26	300			VC	11.09918	1 in 50
2205	44.4	CO	40.54	375			VC	7.211102	
8327		CO		150			VC	8.139123	
9901	39.86	CO	33.36	450			VC	75.0733	1 in 70
8406	39.23	CO	37.53	225			VC	48.60643	
2910		CO		600			BR	10.95603	
8304	37.03	CO	33.07	300			VC	48.08697	1 in 117
1306	44.82	CO	34.8	575			BR	67.60178	
9007	40.94	CO	33.45	450			VC	62.85285	1 in 210
9906	39.99	CO	0	300			VC	33.83785	
1911		CO		100			UN	18.80264	1 in
1949		CO		100			VC	2.902814	
8006	39.66	CO	36.75	300			VC	14.14214	
0906	42.19	CO	39.18	450			CO	33.97058	
8001	40.32	CO	34.32	1500			CO	114.3893	1 in 126
3002	44.38	CO	37.69	1550			VC	179.6942	1 in 97.6598919
1105	43.97	CO	40.56	150			VC	4.24264	
2904	42.44	CO	35.59	900			CO	5.454705	1 in 5
3502	45.9	CO	39.14	1550			CO	44.68402	
1402	44.15	CO	37.22	300			VC	22.36068	1 in 37
1316		CO		100			UN	1.60341	
8313	36.83	CO	31.57	1500			CO	105.5462	
2318		CO		150			VC	3.235048	
2513	45	SW	37.36	225			VC	18.02776	1 in 18
9017	40.87	CO	36.37	600			BR	19.45703	
9002	40.8	CO	35.84	410			VC	95.59898	
0907		CO	0	939			VC	4.598767	
3401	45.13	CO	40.74	300			VC	90.95603	1 in 72
8901	38.88	CO	35.32	550			BR	6.082763	
9011	40.78	CO	34.11	300			VC	15.91152	1 in 265
1305	44.87	CO	39.48	500			BR	4.472136	
3524		CO		150			VC	8.503856	
1206	45.27	CO	41.14	375			VC	43.56604	
2206	44.67	SW		150			VC	17.20465	
1405	43.58	CO	31.3	300			VC	9.486833	
1407	43.84	CO	30.74	400			CO	8.602325	
0225		CO		225			CO	6.998517	
8317	36.69	CO	29.19	300			VC	56.17143	
2404	45.73	CO	41.29	300			VC	25	
3410	44.7	CO	40.77	300			VC	63.50591	1 in 45
8406		CO		150			VC	1.642787	
9305	39.21	CO	31.37	600			CO	20.51828	1 in 187
0301	44.48	CO	40.58	540			BR	36.68797	
1915	43.08	CO	40.19	320			BR	46.09772	1 in 85
9105	40.8	CO	37.04	300			VC	19.3541	1 in 114
2307	44.03	SW	43.34	150			VC	7.28011	
9103	42.8	CO	38.59	300			CO	9.899495	
1326		CO		700			CO	24.3218	
3304	44.81	CO	36.09	375			CO	2.236068	
8403	36.74	CO	28.36	450			VC	14.31782	1 in 143
1104	44.09	CO	40.13	600			CO	75.82216	1 in 63
2902	42.9	CO	32.9	900			CO	25.66232	
1004		CO	0				UN	63.43118	1 in
8208	38.67	CO	33.53	300			VC	25.91794	1 in 28
0903		CO	0	939			CO	5.263057	
8110	39.44	CO	33.9	640			VC	27.54636	1 in 17
1107	44.21	CO	40.11	150			VC	2.236068	
3202	45.25	SW	42.94	225			VC	4.472136	1 in 22
0109	43.96	CO	39.68	375			CO	25.4951	1 in 40
9102	42.09	CO	38.56	300			VC	52.20153	1 in 39
8402	38.66	CO	28.51	450			VC	17.88854	1 in 138
2900	42.71	CO	37.53	650			CO	8.922686	
0003	42.91	CO	38.91	600			VC	76.57676	1 in 64
8007	40.26	CO	36.01	300			VC	54.31236	
0190	42.4	CO	39.03	300			VC	47.20169	1 in 66
8201	39	CO	33.06	400			VC	22.28452	1 in 28
3204	45.27	SW	43.45	225			VC	37.64306	1 in 25
3408	45.36	CO	40.99	300			VC	21.18962	
2207	45.33	CO	43.02	225			VC	4.123106	1 in 2
3301	45.33	CO	44.37	150			VC	33.10589	1 in 16
1209	44.78	CO	39.01	300			VC	12.80625	
1108	44.33	CO	40.85	150			VC	5	
2301	44.62	SW	43.67	150			VC	33.28663	
8101	40.16	CO	33.28	640			VC	36.62938	1 in 59
2001		CO	0	375			VC	81.95041	
0201	44.68	CO	41.15	450			BR	16.40122	1 in 61
8210		CO		100			VC	1.413869	
0209	46.31	CO	40.06	300			VC	38.01316	
1112	44.64	CO	39.43	300			VC	22.67157	1 in 57
2203	44.76	CO	41.01	300			VC	7.615773	
9902	40.37	CO	36.65	600			CO	9.036009	1 in 452
9415		SW	35.66	225			VC	6.624982	1 in 35
9414	38.02	CO	32.15	500			PE	27.83223	1 in 58
9009	41.37	CO	38.67	300			VC	91.27059	
3303	44.93	CO	37.77	375			PVC	30.59412	
0402	42.51	CO	29.65	300			VC	3.162278	
8218	38.49	CO	34.43	400			VC	23.89805	1 in 25
8008	40.31	CO	34.87	300			VC	72.90787	1 in 124
8909		CO	0	450			VC	59.03389	
8401	37.17	CO	28.79	375			VC	12.86285	1 in 49
3105	45.21	CO	40.75	310			VC	81.86182	
3305	44.96	CO	44.03	150			VC	9.627806	
2201	44.89	SW	41.17	150			VC	2.828427	
3208	45.15	CO	38.55	300			VC	40.60788	1 in 71
2102	44.44	CO	39.02	375			VC	3	1 in 75
0108	43.74	CO	39.59	525			VC	80.62395	1 in 187
8102	39.44	CO	33.9	300			VC	2.708573	1 in 12
9905	40.25	CO	36.28	600			CO	33.83785	1 in 13
0303	43.96	CO	39.49	450			VC	22.82542	
1303	45.34	CO	40.94	375			VC	36.40055	
1217	44.31	CO	40.06	300			VC	9.848858	
8115		CO		650			BR	31.19168	
9014	41.5	CO	38.57	300			PVC	22.79389	1 in 134
9104	42.66	CO	38.31	450			CO	39.05125	1 in 98
9310		CO		225			VC	11.31291	
1315		CO		700			CO	16.69862	
1912	43.11	SW	40.52	300			BR	8.062258	1 in 47
0207	45.7	CO	42.36	300			BR	5.385165	
2011		CO		150			VC	4.538065	
8306	38.22	CO	31.24	600			CO	28.3249	1 in 189
1925		CO		150			VC	1.886142	
1308	44.66	CO	38.76	270			VC	7.781502	
9202	39.78	CO	34.41	300			VC	17.35456	1 in 46
8206	37.53	CO	33.45	225			VC	21.50517	1 in 98
2113	44.63	CO	38.63	375			VC	36.23534	
1109	44.58	CO	40.93	600			CO	65.43699	1 in 84
9191	41.7	CO	37.12	450			CO	21.75631	1 in 49
1322		CO		700			CO	11.95414	
0408	40.37	CO	37.37	150			VC	73.01138	1 in 187
8090	40.1	CO	35.72	1500			CO	29.42788	1 in 63
2202	44.88	SW	43.99	150			VC	69.31089	1 in 630
9403	40.06	CO	29.5	375			VC	7.28011	
2103	44.47	CO	38.91	300			VC	27.01851	1 in 68
0314		CO		150			VC	5.901427	
2402	45.12	CO	0	300			VC	6.708204	
0902	41.39	CO	37.64	375			CO	4.857104	1 in 54
2003		CO		600			BR	50.75463	
1211	44.84	CO	39.98	525			VC	11.40175	
1307	44.92	CO	39.54	300			VC	7.071068	1 in 19
3005	41.23	CO	34.87	450			VC	21.7533	1 in 104
9405	40.4	CO	35.98	375			VC	2.236068	
9004	40.98	CO	34.65	640			VC	125.2555	1 in 93
0111	42.53	CO	39.14	525			VC	17.20465	
0406	40.87	CO	28.12	1600			BR	2.236068	
0404	42.85	CO	28.46	600			BR	23.76973	
8212	38.79	CO	33.48	400			VC	18.7454	1 in 45
8308	37.5	CO	33.56	300			VC	16.76305	1 in 70
2901	42.59	CO	34.39	900			CO	33.58457	1 in 23
1001		CO	0	150			VC	21.78838	
8206	37.53	CO	33.68	300			VC	34.18039	1 in 35
3402	45	CO	42.73	300			VC	51.0392	1 in 79
9304	41.64	CO	36.67	300			VC	21.84033	1 in 8
3201	45.05	CO	38.99	300			VC	39.31926	1 in 94
1005	42.97	CO	34.41	1550			CO	80.05623	1 in 55
9903	40.42	CO	36.63	600			VC	25.39497	1 in 77
1406	43.88	CO	33.38	300			VC	10.44031	1 in 23
3003	44.68	CO	39.08	300			VC	2.236068	
2105	44.48	CO	38.49	375			VC	36.12478	

Refno	Cover	Func	Invert	Size x	Size y	Shape	Matl	Length	Grad
2004		CO		225			VC	8.731195	
9409		CO		225			VC	2.734224	
9507		CO	0	1500			CO	179.9222	
3901	43.89	CO	38.57	600			VC	67.88225	1 in 36
8404	36.74	CO	28.24	1500			CSB	51.40039	
9008	41.26	CO	34.19	450			VC	29.41236	1 in 42
2914	42.83	CO		900			CO	48.45311	
2007	44.21	CO	40.14	375			VC	53.64089	
3302	44.99	CO	40.4	300			VC	16.49242	1 in 7
8003	40.1	CO	35.71	380			VC	3	
8208	37.6	CO	32.43	300			VC	60.91538	
8501	37.04	CO	26.34	950			BR	6.403124	
0103	43.37	CO	39.02	375			VC	102.3426	1 in 787
8502		CO	0	750			CO	18.43909	
9090	44.08	CO	39.7	300			VC	36.49657	1 in 33
2112	44.5	CO	37.91	1550			CO	20.61553	
9207	41.95	CO	37.49	400			CO	9.219544	1 in 54
9908		CO		600			CO	9.084469	
8410	37.34	CO	33.84	500			PE	22.32272	1 in 17
2507	45.32	CO	35.35	1550			CO	17.46425	
0208	45.61	CO	42.67	300			BR	71.5891	
2302	44.4	CO	33.93	1550			CO	4.472136	
1215	44.16	CO	40.52	300			VC	18.86796	
9404	40.13	CO	33	340			BR	6.082763	1 in 7
2101	44.1	CO	39.63	490			BR	9.219544	
8332	37.17	CO	31.4	1520			CSB	39.20944	1 in 47
8316	37.12	CO		1330			CO	12.53283	
9206	41.98	CO	38.04	375			VC	7.615773	1 in 45
8311	37.12	CO	29.13	1050			PE	20.90259	1 in 348
8335	36.91	CO	26.82	1500			BR	25.03875	
0905	42.03	CO	32.95	1500			CO	87.96593	1 in 54
8342		CO		150			VC	7.322624	
9116		CO		150			VC	1.061039	
1002		CO		150			VC	2.200355	
8333		CO	31.79	900			PSC	2.935409	1 in 18
0912		CO		150			VC	12.02503	
9015	41.13	CO	38.38	300			PVC	8.792014	1 in 88
0002	42.98	CO	40	600			CO	34.65545	1 in 40
8312	36.88	CO	31.5	600			CO	20.25456	1 in 225
0910		CO		150			VC	16.8695	
9203	41.57	CO	35.97	300			VC	40.93669	1 in 27
9001	40.78	CO	38.41	750			BR	37.16894	1 in 186
9109		CO		300			VC	40.75195	

LEGEND

Abandoned | Foul | Surface Water | Combined

- Public Sewer
- Private Sewer
- Section 104
- Rising Main
- Sludge Main
- Overflow
- Water Course
- Highway Drain

All point assets follow the standard colour convention:
red - combined blue - surface water
brown - foul purple - overflow

- Manhole
- Head of System
- Extent of Survey
- Rodding Eye
- Inlet
- Discharge Point
- Vortex
- Penstock
- Washout Chamber
- Valve
- Air Valve
- Non Return Valve
- Soakaway
- Gully
- Cascade
- Flow Meter
- Hatch Box
- Oil Interceptor
- Summit
- Drop Shaft
- Orifice Plate
- Side Entry Manhole
- Outfall
- Screen Chamber
- Inspection Chamber
- Bifurcation Chamber
- Lamp Hole
- T Junction / Saddle
- Catchpit
- Valve Chamber
- Vent Column
- Vortex Chamber
- Penstock Chamber
- Network Storage Tank
- Sewer Overflow
- Ww Treatment Works
- Ww Pumping Station
- Septic Tank
- Control Kiosk
- Change of Characteristic

MANHOLE FUNCTION

FO	Foul
SW	Surface Water
CO	Combined
OV	Overflow

SEWER SHAPE

CI	Circular	TR	Trapezoidal
EG	Egg	AR	Arch
OV	Oval	BA	Barrel
FT	Flat Top	HO	HorseShoe
RE	Rectangular	UN	Unspecified
SQ	Square		

SEWER MATERIAL

AC	Asbestos Cement
BR	Brick
PE	Polyethylene
RP	Reinforced Plastic Matrix
CO	Concrete
CSB	Concrete Segment Bolted
CSU	Concrete Segment Unbolted
CC	Concrete Box Culverted
PSC	Plastic / Steel Composite
GRC	Glass Reinforced Plastic
DI	Ductile Iron
PVC	Polyvinyl Chloride
CI	Cast Iron
SI	Spun Iron
ST	Steel
VC	Vitrified Clay
PP	Polypropylene
PF	Pitch Fibre
MAC	Masonry, Coursed
MAR	Masonry, Random
U	Unspecified

Address or Site Reference:

Fountain Street 50 Fountain Street,
Manchester,
M2 2AS

Scale: 1:1250 **Date:** 18/12/2020

Sheet: 1 of 1

Printed by: Property Searches

SEWER RECORDS

United Utilities
Water for the North West

The position of the underground apparatus shown on this plan is approximate only and is given in accordance with the best information currently available. United Utilities Water will not accept liability for any loss or damage caused by the actual position being different from those shown.

Crown copyright and database rights 2017 Ordnance Survey 100022432. Unauthorised reproduction will infringe these copyrights.

APPENDIX D

EXISTING DRAINED AREAS PLAN

NOTES:

1. THIS DRAWING HAS BEEN PRODUCED TO INDICATE THE EXISTING DRAINED AREAS OF THE 50 FOUNTAIN STREET SITE. IT IS BASED ON A REVIEW OF THE TOPOGRAPHICAL AND DRAINAGE SURVEYS.
2. FOR TOPOGRAPHICAL SURVEY, REFER TO SURVEY OPERATIONS DRAWING 20L115.
3. FOR DRAINAGE SURVEY, REFER TO REFER TO LANES GROUP PLC DRAWING 8780/01.

LEGEND	
REF	DESCRIPTION
	INDICATIVE PLANNING BOUNDARY AREA: 1151m²
	HARD LANDSCAPED AREAS AREA: 1151m²

Ghost Node

EXISTING SITE DRAINAGE TO BE GRUBBED UP AND BACKFILLED.

CONCERTH LANE

SPRING GARDENS

FOUN

EXISTING BUILDING

TARMAC

PAVING

SETTS

GRAVEL

CELLAR LIGHT

INT MHC01 A UTR DUE TO BEING OUTSIDE LIFT

MHC01 CL 44.04 IL 43.30

MHC02 CL 44.11 IL 43.30

MHC03 CL 44.13 IL 43.33

EXT CP01 CL 45.21 IL 43.51

D CAPPED

MH CL 44.77

MH CL 44.78

0290 CL 44.76

0201 CL 44.73 IL 41.18

MS2

Renaissance Associates Ltd
2nd Floor Tribeca House
21-27 Dale Street
Manchester
M1 1EY

Rev:	Description:	Date:	By:	Chkd:
P01	FOR INFORMATION	18.05.26	JA	KG

Project:

50 FOUNTAIN STREET, MANCHESTER

Drawing Title:

EXISTING DRAINED AREAS PLAN

Status:

STAGE 2

Size:	Date:	Drawn by:	Designed by:	Checked by:
A1	MAY 26	JA	-	KG

Scale: 1:100 | Project No: 2006-05

Project – Originator – Volume – Level – Type – Role – Number:	Revision:
FSM-REN-XX-00-DR-C-00050	P01

This drawing has been prepared for the sole benefit, use and information of the client for the purpose set out in the instructions commissioning it. The liability of **renaissance** in the respect of the information contained in this drawing will not extend to any third party. This document should not be used in whole or part by any third parties without the express written permission of **renaissance**

APPENDIX E

PROPOSED DEVELOPMENT PLANS

04 05

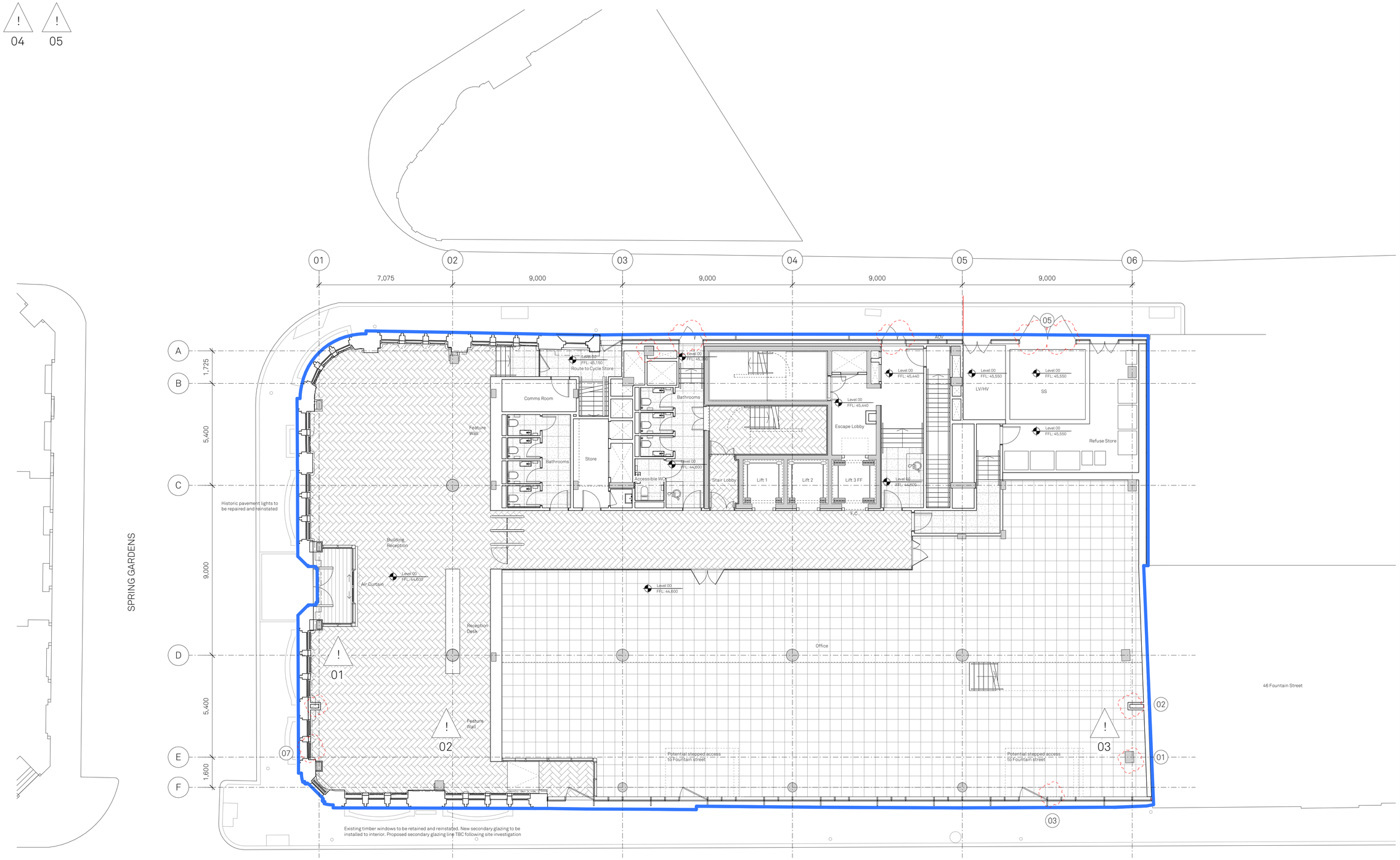

Copyright of this drawing is vested in Jon Matthews Architects and it must not be copied or reproduced without written consent. Figured dimensions only are to be taken from this drawing. Do not scale from this drawing.

All Contractors must visit the site and are responsible for taking and checking all dimensions relative to their work. Jon Matthews Architects are to be advised of any variation between drawings and site conditions.

Electronic data/ drawings issued as 'read only' and should not be interrogated for measurement. All dimensions and levels should be 'read only' from those values stated in text, on the drawings

⚠ CONSTRUCTION - It is considered that the proposed works are within the scope of a competent Contractor and as such no unusual hazards have been identified, refer to relevant Key/ Schedule/ Designers Risk Assessment

PLAN KEY:

F.C.	Fire Curtain - Recessed
RWO	Rainwater Outlet
OFL	Rainwater Overflow
RWP	Rainwater Pipe
	Existing Basement extents
	In Abeyance

ABEYANCE NOTE:

01 Column line position TBC with Structural Eng.

02 Rain water drainage position subject to further coordination

03 Thermal check in RIBA Stage 4

04 Basement waterproofing TBA

05 Door swing beyond ownership boundary. TBC

06 Rain water drain positions TBC

07 Internal wall line and secondary glazing line to be confirmed following further site investigations

08 Coordination with MEP designer regarding service routes and floor-to-underside of services heights

09 Interface with Party wall to be developed following further site investigation

10 Structural support of Grade II listed facade TBC with Structural engineer

11 Structural column & cladding line to be confirmed at next RIBA stage

12 Access and maintenance strategy to be agreed at next stage

RESIDUAL RISK

The following residual risks have been identified for this floor level:

01 - Retention of existing Grade II listed facade
02 - Double height space
03 - Building along party wall line with 46 Fountain Street
04 - Requirement for Access & Maintenance Strategy for information on cleaning/ maintenance of building facade.
05 - Refer to Asbestos Survey
06 - Maintenance work at height required at terrace/roof level

Rev:	Date:	Details:
P06	03/07/26	RIBA Stage 3 Issue
P05	19/06/26	WIP RIBA Stage 3 Issue
P04	20/12/21	Issued for Information
P03	01/09/21	Issued for Stage 2
P02	06/08/21	Issued for Information
P01	19/05/21	Issued for Information

Jon Matthews Architects
Union, 2-10 Albert Square, Manchester, M2 6LW

Project:
50 Fountain Street

Title:
Ground Floor

Scale:	Origin Date:	Drawn:	Checked:
1:100@A1	03/19/21	VD	MH

Status:
S2

Drawing No: 142-JMA-B1-00-P-A-022200

Rev: P06

04 05

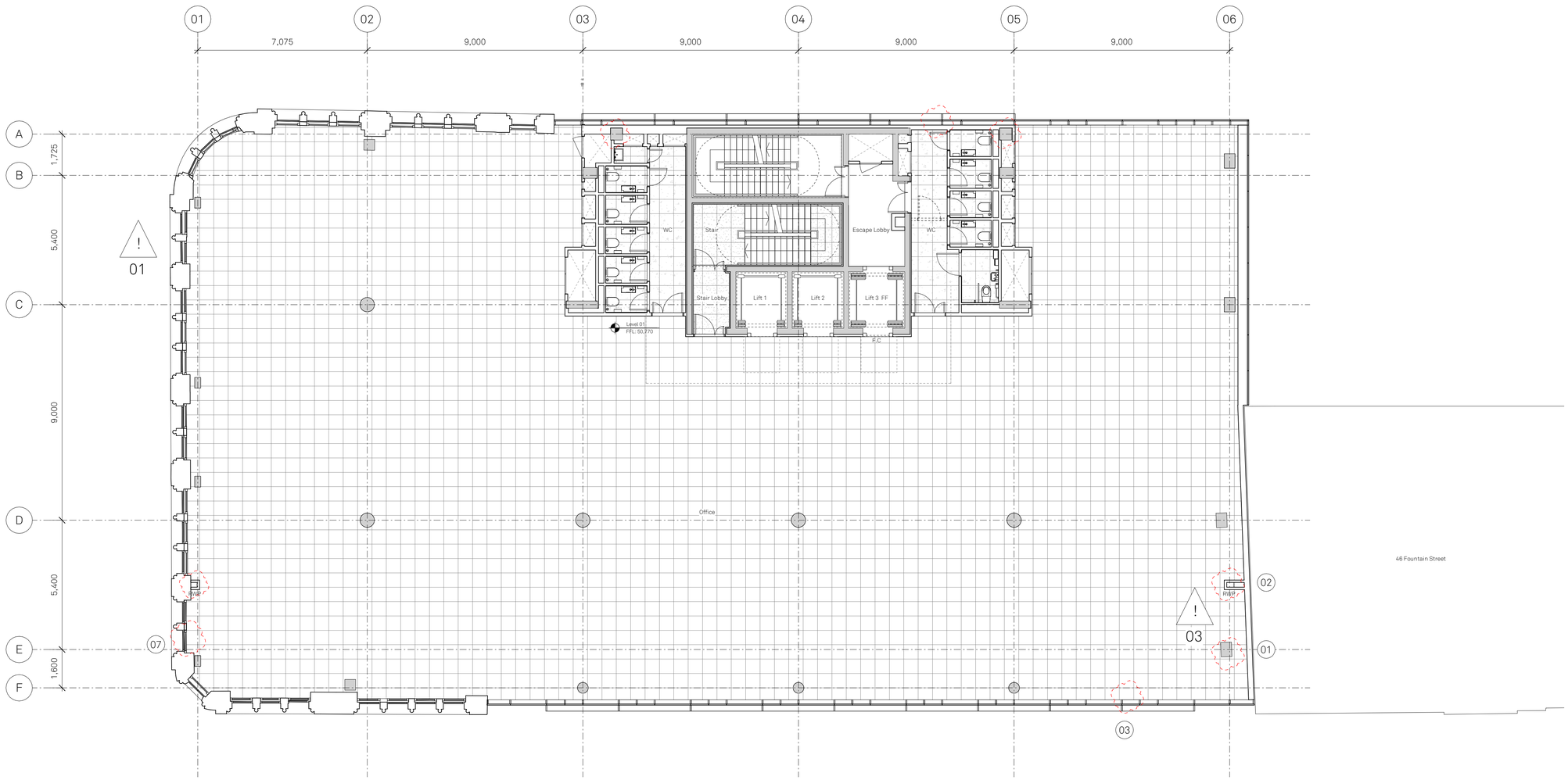

Copyright of this drawing is vested in Jon Matthews Architects and it must not be copied or reproduced without written consent. Figured dimensions only are to be taken from this drawing. Do not scale from this drawing.

All Contractors must visit the site and are responsible for taking and checking all dimensions relative to their work. Jon Matthews Architects are to be advised of any variation between drawings and site conditions.

Electronic data/ drawings issued as 'read only' and should not be interrogated for measurement. All dimensions and levels should be 'read only' from those values stated in text, on the drawings

CONSTRUCTION - It is considered that the proposed works are within the scope of a competent Contractor and as such no unusual hazards have been identified, refer to relevant Key/ Schedule/ Designers Risk Assessment

PLAN KEY:

F.C.	Fire Curtain - Recessed
RWO	Rainwater Outlet
OFL	Rainwater Overflow
RWP	Rainwater Pipe
	Existing Basement extents
	In Abeyance

ABEYANCE NOTE:

01 Column line position TBC with Structural Eng.

02 Rain water drainage position subject to further coordination

03 Thermal check in RIBA Stage 4

04 Basement waterproofing TBA

05 Door swing beyond ownership boundary. TBC

06 Rain water drain positions TBC

07 Internal wall line and secondary glazing line to be confirmed following further site investigations

08 Coordination with MEP designer regarding service routes and floor-to-underside of services heights

09 Interface with Party wall to be developed following further site investigation

10 Structural support of Grade II listed facade TBC with Structural engineer

11 Structural column & cladding line to be confirmed at next RIBA stage

12 Access and maintenance strategy to be agreed at next stage

RESIDUAL RISK

The following residual risks have been identified for this floor level:

01 - Retention of existing Grade II listed facade
02 - Double height space
03 - Building along party wall line with 46 Fountain Street
04 - Requirement for Access & Maintenance Strategy for information on cleaning/ maintenance of building facade.
05 - Refer to Asbestos Survey
06 - Maintenance work at height required at terrace/roof level

Rev:	Date:	Details:
P06	03/07/26	RIBA Stage 3 Issue
P05	25/06/26	Issued for Coordination
P04	19/06/26	WIP RIBA Stage 3 Issue
P03	01/09/21	Issued for Stage 2
P02	06/08/21	Issued for Information
P01	19/05/21	Issued for Information

Jon Matthews Architects
Union, 2-10 Albert Square, Manchester, M2 6LW

Project:
50 Fountain Street

Title:
1st Floor

Scale:	Origin Date:	Drawn:	Checked:
1:100@A1	03/19/21	VD	MH

Status:
S2

Drawing No:
142-JMA-B1-01-P-A-022201

Rev:
P06

04 05

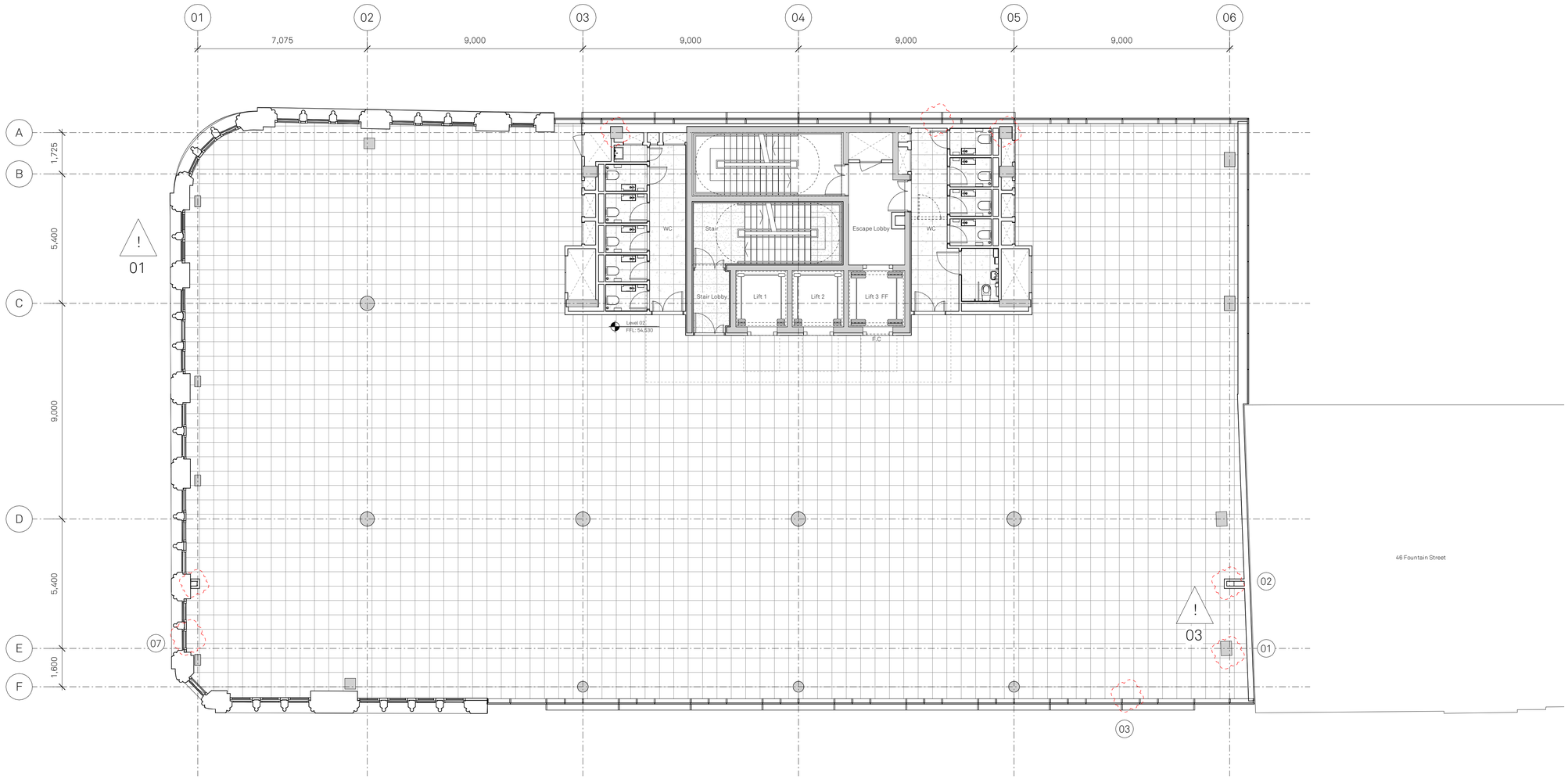

Copyright of this drawing is vested in Jon Matthews Architects and it must not be copied or reproduced without written consent. Figured dimensions only are to be taken from this drawing. Do not scale from this drawing.

All Contractors must visit the site and are responsible for taking and checking all dimensions relative to their work. Jon Matthews Architects are to be advised of any variation between drawings and site conditions.

Electronic data/ drawings issued as 'read only' and should not be interrogated for measurement. All dimensions and levels should be 'read only' from those values stated in text, on the drawings

CONSTRUCTION - It is considered that the proposed works are within the scope of a competent Contractor and as such no unusual hazards have been identified, refer to relevant Key/ Schedule/ Designers Risk Assessment

PLAN KEY:

F.C.	Fire Curtain - Recessed
RWO	Rainwater Outlet
OFL	Rainwater Overflow
RWP	Rainwater Pipe
- - -	Existing Basement extents
	In Abeyance

ABEYANCE NOTE:

01 Column line position TBC with Structural Eng.

02 Rain water drainage position subject to further coordination

03 Thermal check in RIBA Stage 4

04 Basement waterproofing TBA

05 Door swing beyond ownership boundary. TBC

06 Rain water drain positions TBC

07 Internal wall line and secondary glazing line to be confirmed following further site investigations

08 Coordination with MEP designer regarding service routes and floor-to-underside of services heights

09 Interface with Party wall to be developed following further site investigation

10 Structural support of Grade II listed facade TBC with Structural engineer

11 Structural column & cladding line to be confirmed at next RIBA stage

12 Access and maintenance strategy to be agreed at next stage

RESIDUAL RISK

The following residual risks have been identified for this floor level:

01 - Retention of existing Grade II listed facade
02 - Double height space
03 - Building along party wall line with 46 Fountain Street
04 - Requirement for Access & Maintenance Strategy for information on cleaning/ maintenance of building facade.
05 - Refer to Asbestos Survey
06 - Maintenance work at height required at terrace/roof level

Rev:	Date:	Details:
P01	03/07/26	RIBA Stage 3 Issue

Jon Matthews Architects
Union, 2-10 Albert Square, Manchester, M2 6LW

Project:
50 Fountain Street

Title:
2nd Floor

Scale:	Origin Date:	Drawn:	Checked:
1:100@A1	03/07/26	VD	MH

Status:
S2

Drawing No:
142-JMA-B1-02-P-A-022202

Rev:
P01

04 05

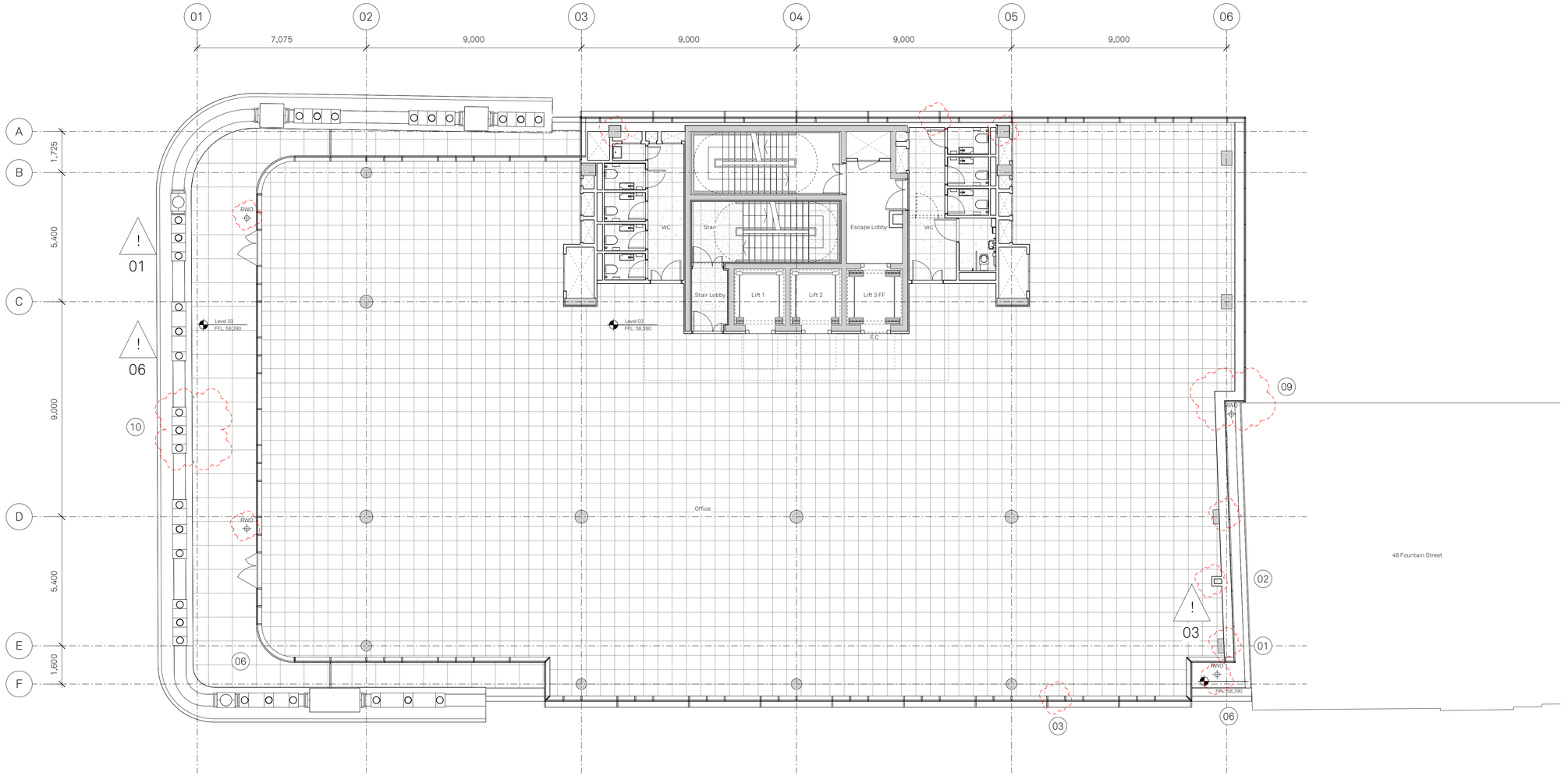

Copyright of this drawing is vested in Jon Matthews Architects and it must not be copied or reproduced without written consent. Figured dimensions only are to be taken from this drawing. Do not scale from this drawing.

All Contractors must visit the site and are responsible for taking and checking all dimensions relative to their work. Jon Matthews Architects are to be advised of any variation between drawings and site conditions.

Electronic data/ drawings issued as 'read only' and should not be interrogated for measurement. All dimensions and levels should be 'read only' from those values stated in text, on the drawings

CONSTRUCTION - It is considered that the proposed works are within the scope of a competent Contractor and as such no unusual hazards have been identified, refer to relevant Key/ Schedule/ Designers Risk Assessment

PLAN KEY:

F.C.	Fire Curtain - Recessed
RWO	Rainwater Outlet
OFL	Rainwater Overflow
RWP	Rainwater Pipe
—·—	Existing Basement extents
	In Abeyance

ABEYANCE NOTE:

01 Column line position TBC with Structural Eng.

02 Rain water drainage position subject to further coordination

03 Thermal check in RIBA Stage 4

04 Basement waterproofing TBA

05 Door swing beyond ownership boundary. TBC

06 Rain water drain positions TBC

07 Internal wall line and secondary glazing line to be confirmed following further site investigations

08 Coordination with MEP designer regarding service routes and floor-to-underside of services heights

09 Interface with Party wall to be developed following further site investigation

10 Structural support of Grade II listed facade TBC with Structural engineer

11 Structural column & cladding line to be confirmed at next RIBA stage

12 Access and maintenance strategy to be agreed at next stage

RESIDUAL RISK

The following residual risks have been identified for this floor level:

01 - Retention of existing Grade II listed facade
02 - Double height space
03 - Building along party wall line with 46 Fountain Street
04 - Requirement for Access & Maintenance Strategy for information on cleaning/ maintenance of building facade.
05 - Refer to Asbestos Survey
06 - Maintenance work at height required at terrace/roof level

Rev:	Date:	Details:
P06	03/07/26	RIBA Stage 3 Issue
P05	25/06/26	Issued for Coordination
P04	19/06/26	WIP RIBA Stage 3 Issue
P03	01/09/21	Issued for Stage 2
P02	06/08/21	Issued for Information
P01	19/05/21	Issued for Information

Jon Matthews Architects
Union, 2-10 Albert Square, Manchester, M2 6LW

Project:
50 Fountain Street

Title:
3rd Floor

Scale:	Origin Date:	Drawn:	Checked:
1:100@A1	04/22/21	VD	MH

Status:
S2

Drawing No: 142-JMA-B1-03-P-A-022203

Rev: P06

04 05

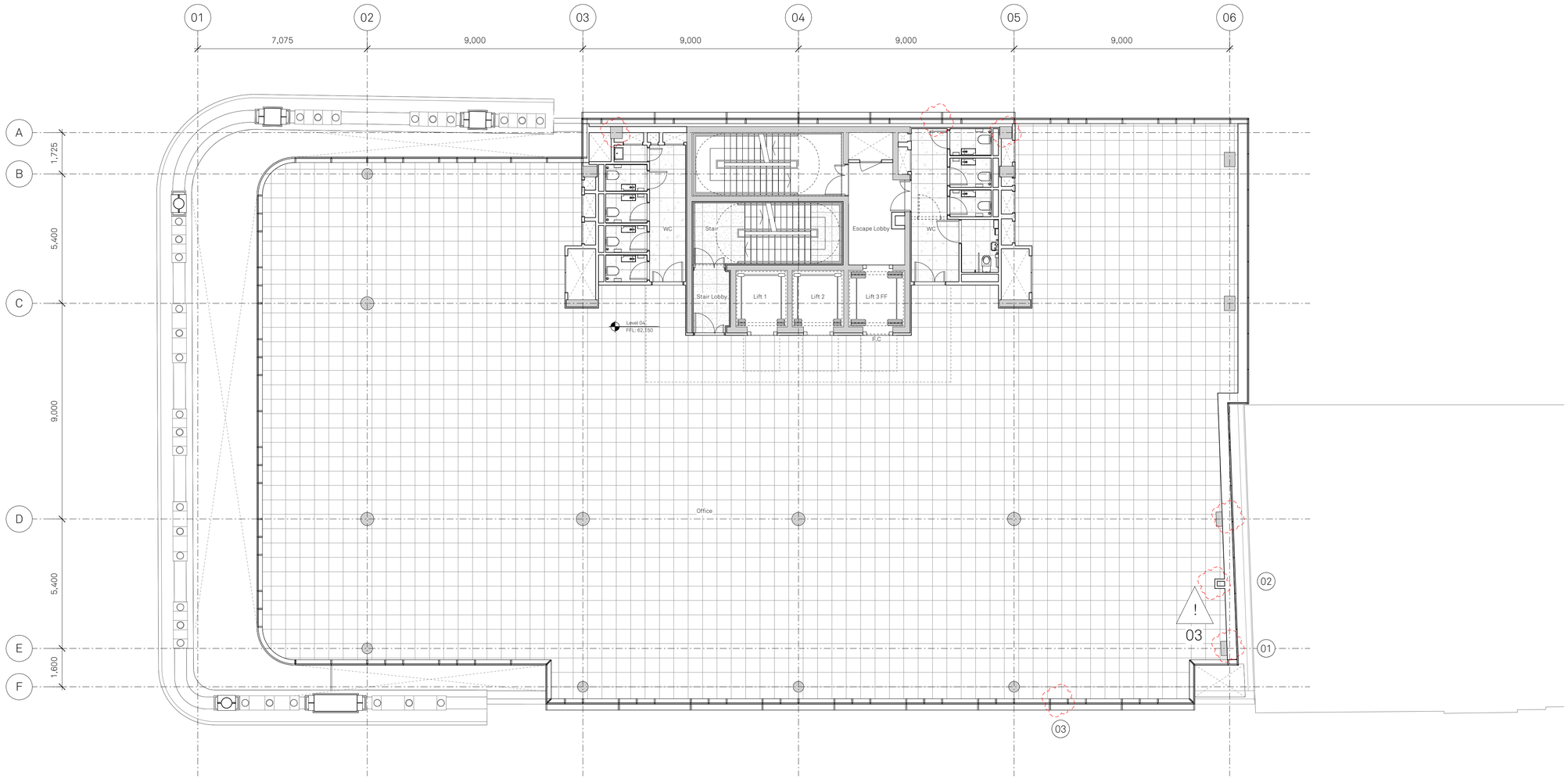

Copyright of this drawing is vested in Jon Matthews Architects and it must not be copied or reproduced without written consent. Figured dimensions only are to be taken from this drawing. Do not scale from this drawing.

All Contractors must visit the site and are responsible for taking and checking all dimensions relative to their work. Jon Matthews Architects are to be advised of any variation between drawings and site conditions.

Electronic data/ drawings issued as 'read only' and should not be interrogated for measurement. All dimensions and levels should be 'read only' from those values stated in text, on the drawings

⚠ CONSTRUCTION - It is considered that the proposed works are within the scope of a competent Contractor and as such no unusual hazards have been identified, refer to relevant Key/ Schedule/ Designers Risk Assessment

PLAN KEY:

F.C. Fire Curtain - Recessed
RWO Rainwater Outlet
OFL Rainwater Overflow
RWP Rainwater Pipe
Existing Basement extents
In Abeyance

ABEYANCE NOTE:

01 Column line position TBC with Structural Eng.
02 Rain water drainage position subject to further coordination
03 Thermal check in RIBA Stage 4
04 Basement waterproofing TBA
05 Door swing beyond ownership boundary. TBC
06 Rain water drain positions TBC
07 Internal wall line and secondary glazing line to be confirmed following further site investigations
08 Coordination with MEP designer regarding service routes and floor-to-underside of services heights
09 Interface with Party wall to be developed following further site investigation
10 Structural support of Grade II listed facade TBC with Structural engineer
11 Structural column & cladding line to be confirmed at next RIBA stage
12 Access and maintenance strategy to be agreed at next stage

RESIDUAL RISK

The following residual risks have been identified for this floor level:

01 - Retention of existing Grade II listed facade
02 - Double height space
03 - Building along party wall line with 46 Fountain Street
04 - Requirement for Access & Maintenance Strategy for information on cleaning/ maintenance of building facade.
05 - Refer to Asbestos Survey
06 - Maintenance work at height required at terrace/roof level

Rev:	Date:	Details:
P05	03/07/26	RIBA Stage 3 Issue
P04	19/06/26	WIP RIBA Stage 3 Issue
P03	01/09/21	Issued for Stage 2
P02	06/08/21	Issued for Information
P01	19/05/21	Issued for Information

Jon Matthews Architects
Union, 2-10 Albert Square, Manchester, M2 6LW

Project:
50 Fountain Street

Title:
4th Floor

Scale:	Origin Date:	Drawn:	Checked:
1:100@A1	04/22/21	VD	MH

Status:
S2

Drawing No: 142-JMA-B1-04-P-A-022204
Rev: P05

04 05

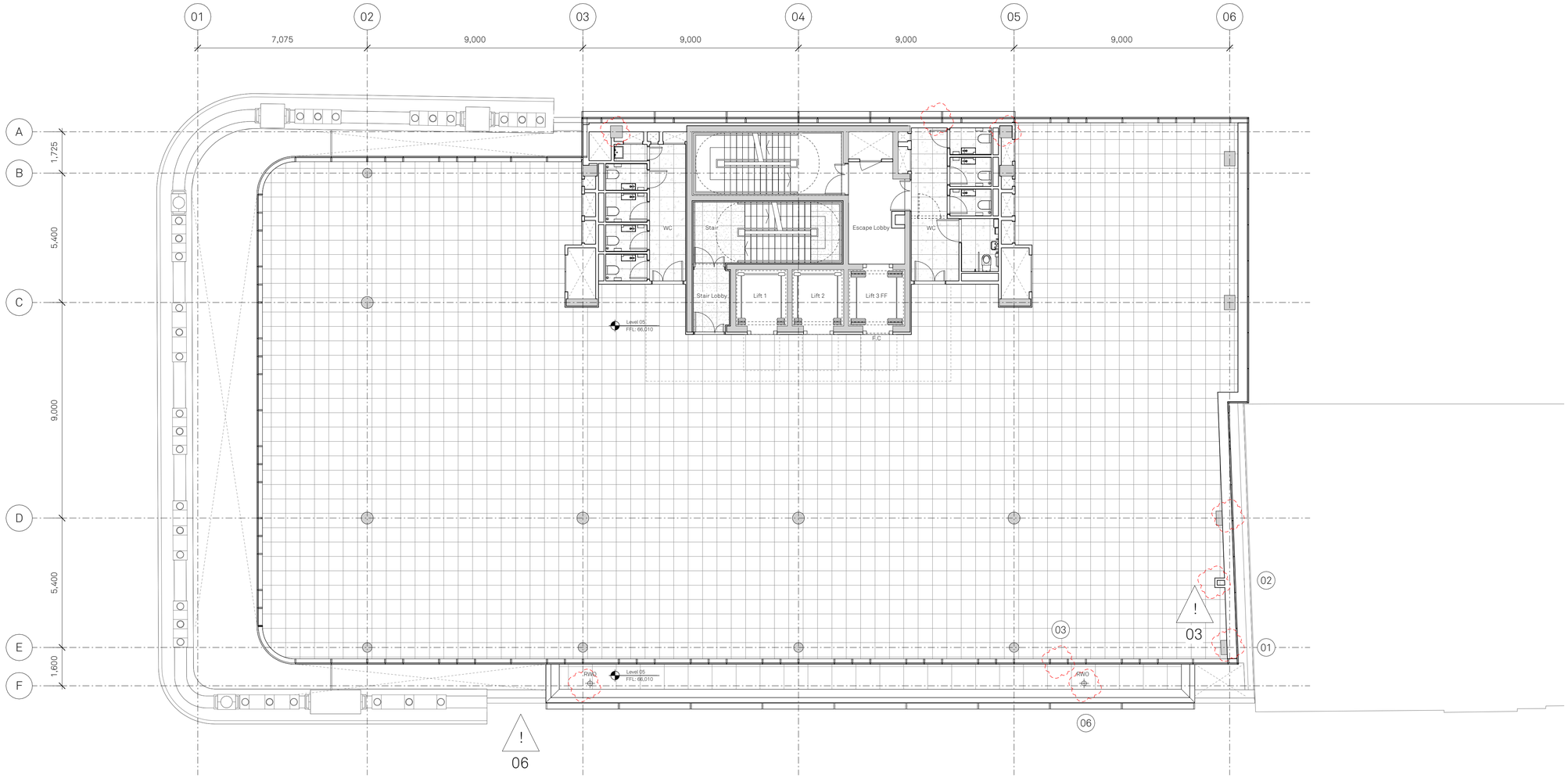

Copyright of this drawing is vested in Jon Matthews Architects and it must not be copied or reproduced without written consent. Figured dimensions only are to be taken from this drawing. Do not scale from this drawing.

All Contractors must visit the site and are responsible for taking and checking all dimensions relative to their work. Jon Matthews Architects are to be advised of any variation between drawings and site conditions.

Electronic data/ drawings issued as 'read only' and should not be interrogated for measurement. All dimensions and levels should be 'read only' from those values stated in text, on the drawings

CONSTRUCTION - It is considered that the proposed works are within the scope of a competent Contractor and as such no unusual hazards have been identified, refer to relevant Key/ Schedule/ Designers Risk Assessment

PLAN KEY:

F.C.	Fire Curtain - Recessed
RWO	Rainwater Outlet
OFL	Rainwater Overflow
RWP	Rainwater Pipe
	Existing Basement extents
	In Abeyance

ABEYANCE NOTE:

01 Column line position TBC with Structural Eng.

02 Rain water drainage position subject to further coordination

03 Thermal check in RIBA Stage 4

04 Basement waterproofing TBA

05 Door swing beyond ownership boundary. TBC

06 Rain water drain positions TBC

07 Internal wall line and secondary glazing line to be confirmed following further site investigations

08 Coordination with MEP designer regarding service routes and floor-to-underside of services heights

09 Interface with Party wall to be developed following further site investigation

10 Structural support of Grade II listed facade TBC with Structural engineer

11 Structural column & cladding line to be confirmed at next RIBA stage

12 Access and maintenance strategy to be agreed at next stage

RESIDUAL RISK

The following residual risks have been identified for this floor level:

01 - Retention of existing Grade II listed facade
02 - Double height space
03 - Building along party wall line with 46 Fountain Street
04 - Requirement for Access & Maintenance Strategy for information on cleaning/ maintenance of building facade.
05 - Refer to Asbestos Survey
06 - Maintenance work at height required at terrace/roof level

Rev:	Date:	Details:
P05	03/07/26	RIBA Stage 3 Issue
P04	19/06/26	WIP RIBA Stage 3 Issue
P03	01/09/21	Issued for Stage 2
P02	06/08/21	Issued for Information
P01	19/05/21	Issued for Information

Jon Matthews Architects
Union, 2-10 Albert Square, Manchester, M2 6LW

Project:
50 Fountain Street

Title:
5th Floor

Scale:	Origin Date:	Drawn:	Checked:
1:100@A1	04/22/21	VD	MH

Status:
S2

Drawing No: 142-JMA-B1-05-P-A-022205

Rev: P05

04 05

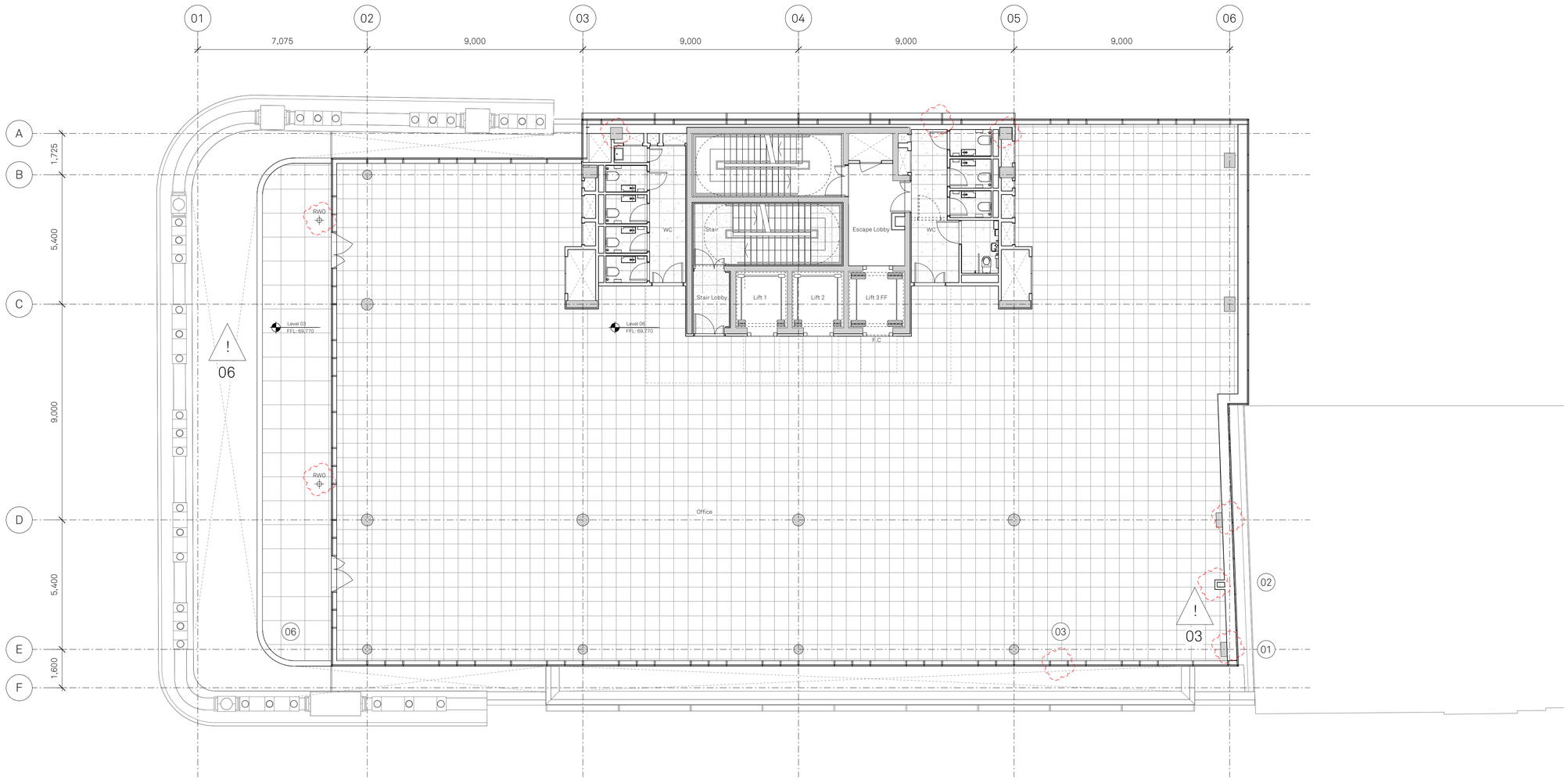

Copyright of this drawing is vested in Jon Matthews Architects and it must not be copied or reproduced without written consent. Figured dimensions only are to be taken from this drawing. Do not scale from this drawing.

All Contractors must visit the site and are responsible for taking and checking all dimensions relative to their work. Jon Matthews Architects are to be advised of any variation between drawings and site conditions.

Electronic data/ drawings issued as 'read only' and should not be interrogated for measurement. All dimensions and levels should be 'read only' from those values stated in text, on the drawings

CONSTRUCTION - It is considered that the proposed works are within the scope of a competent Contractor and as such no unusual hazards have been identified, refer to relevant Key/ Schedule/ Designers Risk Assessment

PLAN KEY:

- F.C. Fire Curtain - Recessed
- RWO Rainwater Outlet
- OFL Rainwater Overflow
- RWP Rainwater Pipe
- Existing Basement extents
- In Abeyance

ABEYANCE NOTE:

01 Column line position TBC with Structural Eng.

02 Rain water drainage position subject to further coordination

03 Thermal check in RIBA Stage 4

04 Basement waterproofing TBA

05 Door swing beyond ownership boundary. TBC

06 Rain water drain positions TBC

07 Internal wall line and secondary glazing line to be confirmed following further site investigations

08 Coordination with MEP designer regarding service routes and floor-to-underside of services heights

09 Interface with Party wall to be developed following further site investigation

10 Structural support of Grade II listed facade TBC with Structural engineer

11 Structural column & cladding line to be confirmed at next RIBA stage

12 Access and maintenance strategy to be agreed at next stage

RESIDUAL RISK

The following residual risks have been identified for this floor level:

01 - Retention of existing Grade II listed facade
02 - Double height space
03 - Building along party wall line with 46 Fountain Street
04 - Requirement for Access & Maintenance Strategy for information on cleaning/ maintenance of building facade.
05 - Refer to Asbestos Survey
06 - Maintenance work at height required at terrace/roof level

Rev:	Date:	Details:
P05	03/07/26	RIBA Stage 3 Issue
P04	19/06/26	WIP RIBA Stage 3 Issue
P03	01/09/21	Issued for Stage 2
P02	06/08/21	Issued for Information
P01	19/05/21	Issued for Information

Jon Matthews Architects
Union, 2-10 Albert Square, Manchester, M2 6LW

Project:
50 Fountain Street

Title:
6th Floor

Scale:	Origin Date:	Drawn:	Checked:
1:100@A1	04/22/21	VD	MH

Status:
S2

Drawing No: 142-JMA-B1-06-P-A-022206

Rev: P05

04 05

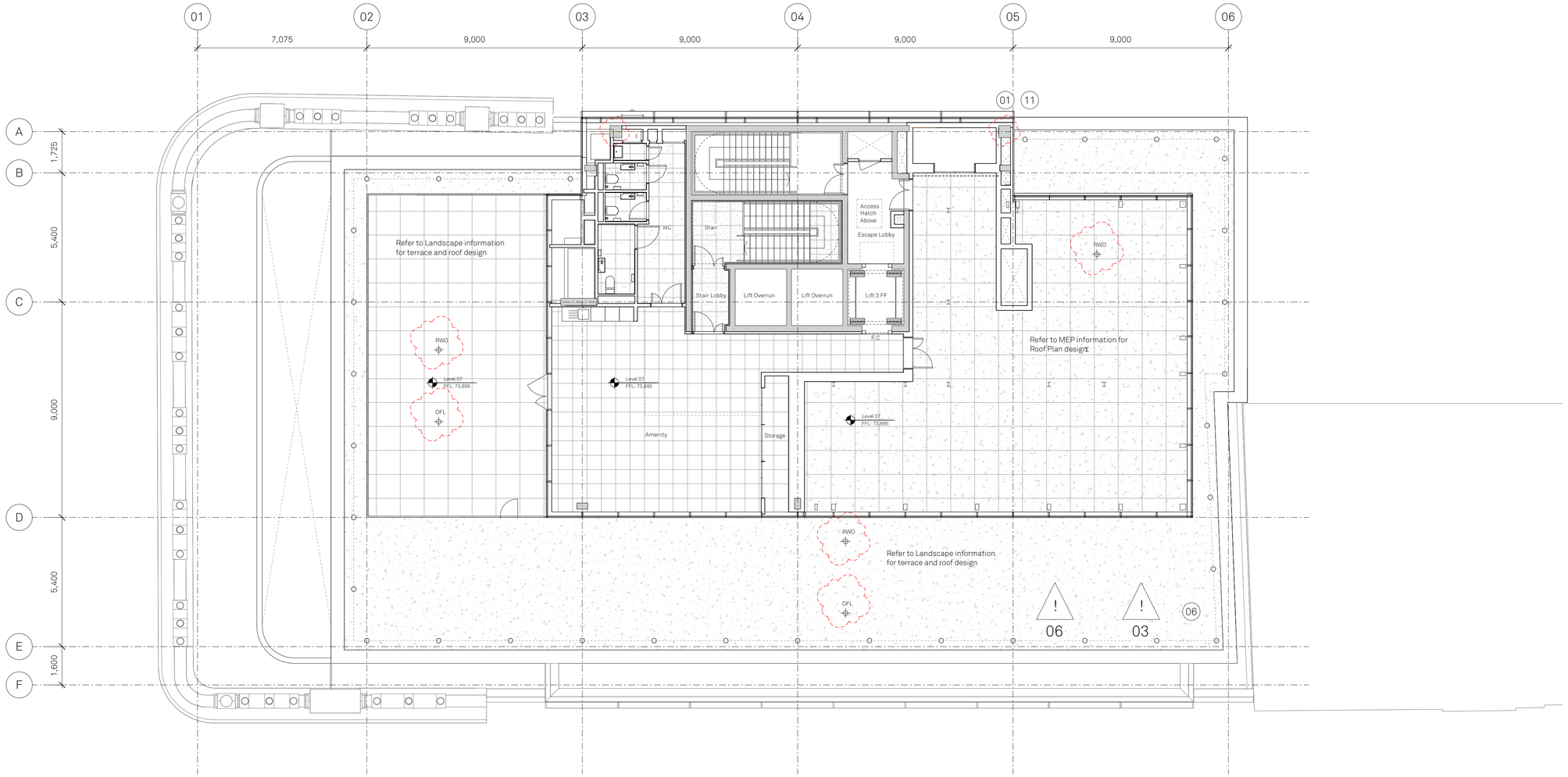

Copyright of this drawing is vested in Jon Matthews Architects and it must not be copied or reproduced without written consent. Figured dimensions only are to be taken from this drawing. Do not scale from this drawing.

All Contractors must visit the site and are responsible for taking and checking all dimensions relative to their work. Jon Matthews Architects are to be advised of any variation between drawings and site conditions.

Electronic data/ drawings issued as 'read only' and should not be interrogated for measurement. All dimensions and levels should be 'read only' from those values stated in text, on the drawings

⚠ CONSTRUCTION - It is considered that the proposed works are within the scope of a competent Contractor and as such no unusual hazards have been identified, refer to relevant Key/ Schedule/ Designers Risk Assessment

PLAN KEY:

F.C.	Fire Curtain - Recessed
RWO	Rainwater Outlet
OFL	Rainwater Overflow
RWP	Rainwater Pipe
	Existing Basement extents
	In Abeyance

ABEYANCE NOTE:

01 Column line position TBC with Structural Eng.

02 Rain water drainage position subject to further coordination

03 Thermal check in RIBA Stage 4

04 Basement waterproofing TBA

05 Door swing beyond ownership boundary. TBC

06 Rain water drain positions TBC

07 Internal wall line and secondary glazing line to be confirmed following further site investigations

08 Coordination with MEP designer regarding service routes and floor-to-underside of services heights

09 Interface with Party wall to be developed following further site investigation

10 Structural support of Grade II listed facade TBC with Structural engineer

11 Structural column & cladding line to be confirmed at next RIBA stage

12 Access and maintenance strategy to be agreed at next stage

RESIDUAL RISK

The following residual risks have been identified for this floor level:

01 - Retention of existing Grade II listed facade
02 - Double height space
03 - Building along party wall line with 46 Fountain Street
04 - Requirement for Access & Maintenance Strategy for information on cleaning/ maintenance of building facade.
05 - Refer to Asbestos Survey
06 - Maintenance work at height required at terrace/roof level

Rev:	Date:	Details:
P05	03/07/26	RIBA Stage 3 Issue
P04	19/06/26	WIP RIBA Stage 3 Issue
P03	01/09/21	Issued for Stage 2
P02	06/08/21	Issued for Information
P01	19/05/21	Issued for Information

Jon Matthews Architects
Union, 2-10 Albert Square, Manchester, M2 6LW

Project:
50 Fountain Street

Title:
7th Floor

Scale:	Origin Date:	Drawn:	Checked:
1:100@A1	04/22/21	VD	MH

Status:
S2

Drawing No: 142-JMA-B1-07-P-A-022207

Rev: P05

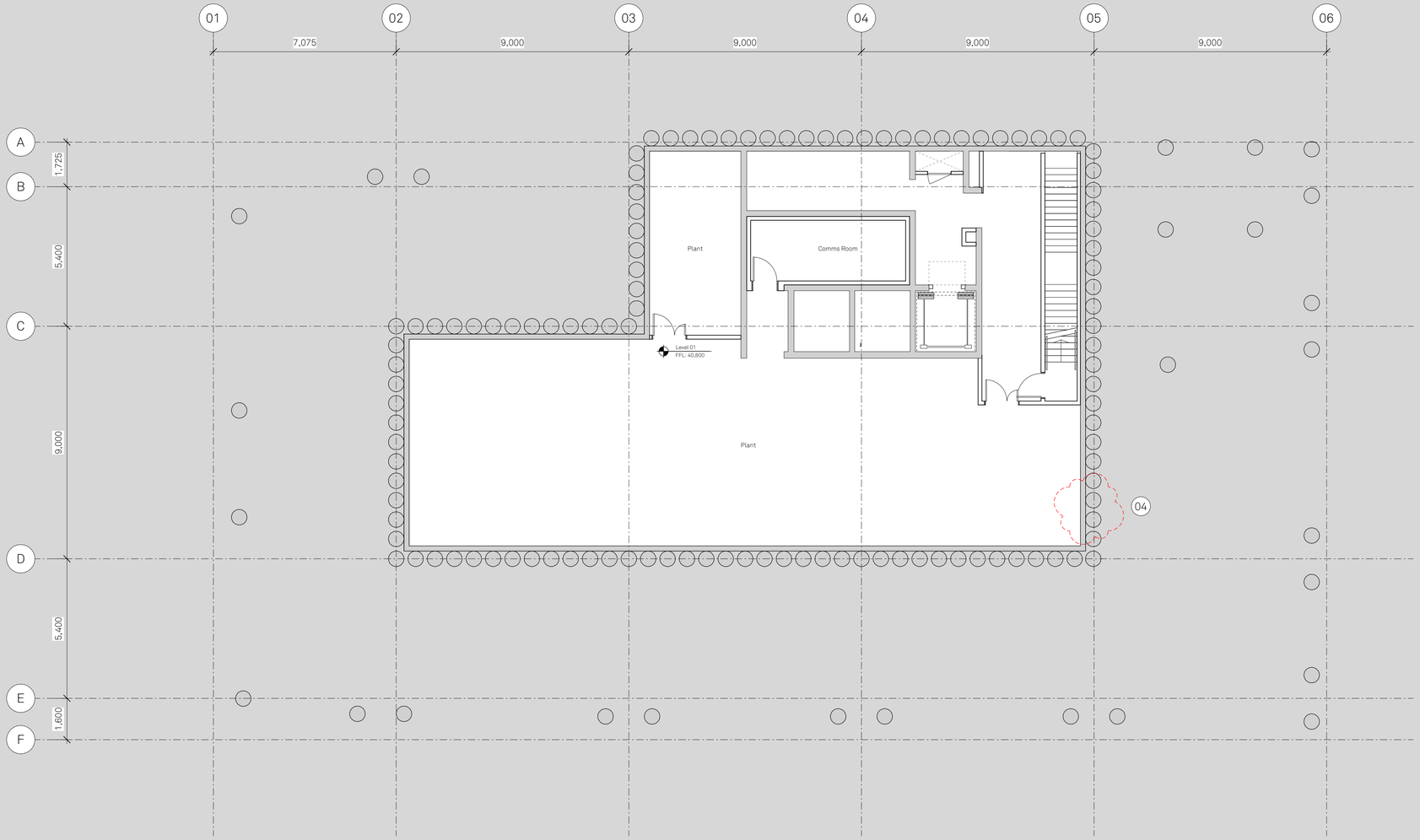

Copyright of this drawing is vested in Jon Matthews Architects and it must not be copied or reproduced without written consent. Figured dimensions only are to be taken from this drawing. Do not scale from this drawing.

All Contractors must visit the site and are responsible for taking and checking all dimensions relative to their work. Jon Matthews Architects are to be advised of any variation between drawings and site conditions.

Electronic data/ drawings issued as 'read only' and should not be interrogated for measurement. All dimensions and levels should be 'read only' from those values stated in text, on the drawings

⚠ CONSTRUCTION - It is considered that the proposed works are within the scope of a competent Contractor and as such no unusual hazards have been identified, refer to relevant Key/ Schedule/ Designers Risk Assessment

PLAN KEY:

F.C.	Fire Curtain - Recessed
RWO	Rainwater Outlet
OFL	Rainwater Overflow
RWP	Rainwater Pipe
- - -	Existing Basement extents
	In Abeyance

ABEYANCE NOTE:

01 Column line position TBC with Structural Eng.

02 Rain water drainage position subject to further coordination

03 Thermal check in RIBA Stage 4

04 Basement waterproofing TBA

05 Door swing beyond ownership boundary. TBC

06 Rain water drain positions TBC

07 Internal wall line and secondary glazing line to be confirmed following further site investigations

08 Coordination with MEP designer regarding service routes and floor-to-underside of services heights

09 Interface with Party wall to be developed following further site investigation

10 Structural support of Grade II listed facade TBC with Structural engineer

11 Structural column & cladding line to be confirmed at next RIBA stage

12 Access and maintenance strategy to be agreed at next stage

! RESIDUAL RISK

The following residual risks have been identified for this floor level:

01 - Retention of existing Grade II listed facade
02 - Double height space
03 - Building along party wall line with 46 Fountain Street
04 - Requirement for Access & Maintenance Strategy for information on cleaning/ maintenance of building facade.
05 - Refer to Asbestos Survey
06 - Maintenance work at height required at terrace/roof level

Rev:	Date:	Details:
P05	03/07/26	RIBA Stage 3 Issue
P04	19/06/26	WIP RIBA Stage 3 Issue
P03	01/09/21	Issued for Stage 2
P02	06/08/21	Issued for Information
P01	19/05/21	Issued for Information

Jon Matthews Architects
Union, 2-10 Albert Square, Manchester, M2 6LW

Project:
50 Fountain Street

Title:
Basement

Scale:	Origin Date:	Drawn:	Checked:
1:100@A1	04/22/21	VD	MH

Status:
S2

Drawing No: 142-JMA-B1-B1-P-A-022299

Rev: P05

04 05

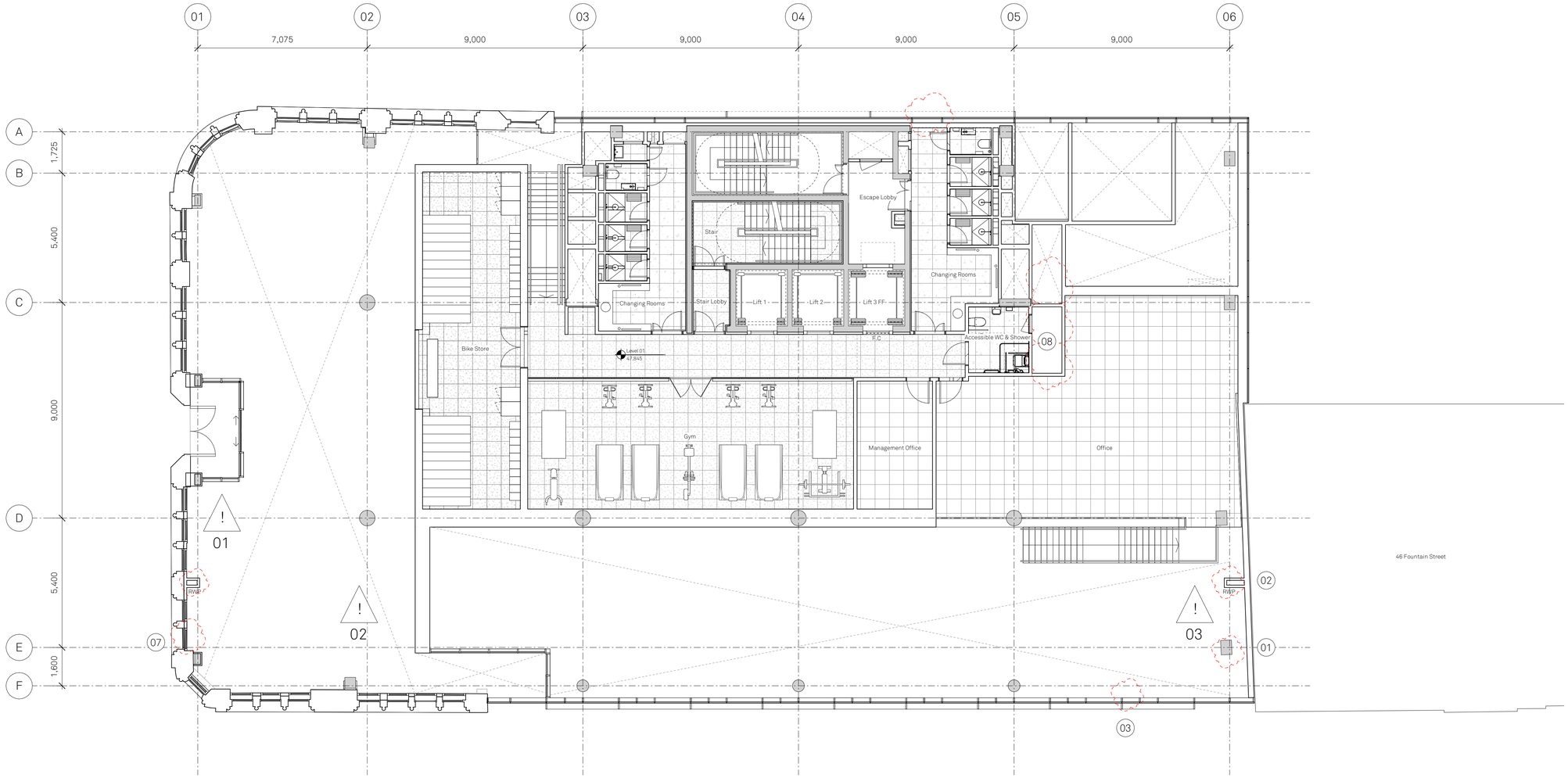

Copyright of this drawing is vested in Jon Matthews Architects and it must not be copied or reproduced without written consent. Figured dimensions only are to be taken from this drawing. Do not scale from this drawing.

All Contractors must visit the site and are responsible for taking and checking all dimensions relative to their work. Jon Matthews Architects are to be advised of any variation between drawings and site conditions.

Electronic data/ drawings issued as 'read only' and should not be interrogated for measurement. All dimensions and levels should be 'read only' from those values stated in text, on the drawings

⚠ CONSTRUCTION - It is considered that the proposed works are within the scope of a competent Contractor and as such no unusual hazards have been identified, refer to relevant Key/ Schedule/ Designers Risk Assessment

PLAN KEY:

F.C.	Fire Curtain - Recessed
RWO	Rainwater Outlet
OFL	Rainwater Overflow
RWP	Rainwater Pipe
– – –	Existing Basement extents
(✓)	In Abeyance

ABEYANCE NOTE:

01 Column line position TBC with Structural Eng.

02 Rain water drainage position subject to further coordination

03 Thermal check in RIBA Stage 4

04 Basement waterproofing TBA

05 Door swing beyond ownership boundary. TBC

06 Rain water drain positions TBC

07 Internal wall line and secondary glazing line to be confirmed following further site investigations

08 Coordination with MEP designer regarding service routes and floor-to-underside of services heights

09 Interface with Party wall to be developed following further site investigation

10 Structural support of Grade II listed facade TBC with Structural engineer

11 Structural column & cladding line to be confirmed at next RIBA stage

12 Access and maintenance strategy to be agreed at next stage

RESIDUAL RISK

The following residual risks have been identified for this floor level:

01 - Retention of existing Grade II listed facade
02 - Double height space
03 - Building along party wall line with 46 Fountain Street
04 - Requirement for Access & Maintenance Strategy for information on cleaning/ maintenance of building facade.
05 - Refer to Asbestos Survey
06 - Maintenance work at height required at terrace/roof level

Rev:	Date:	Details:
P05	03/07/26	RIBA Stage 3 Issue
P04	19/06/26	WIP RIBA Stage 3 Issue
P03	01/09/21	Issued for Stage 2
P02	06/08/21	Issued for Information
P01	19/05/21	Issued for Information

Jon Matthews Architects
Union, 2-10 Albert Square, Manchester, M2 6LW

Project:
50 Fountain Street

Title:
Mezzanine

Scale:	Origin Date:	Drawn:	Checked:
1:100@A1	04/22/21	VD	MH

Status:
S2

Drawing No:
142-JMA-B1-M-P-A-022200M

Rev:
P05

04 05

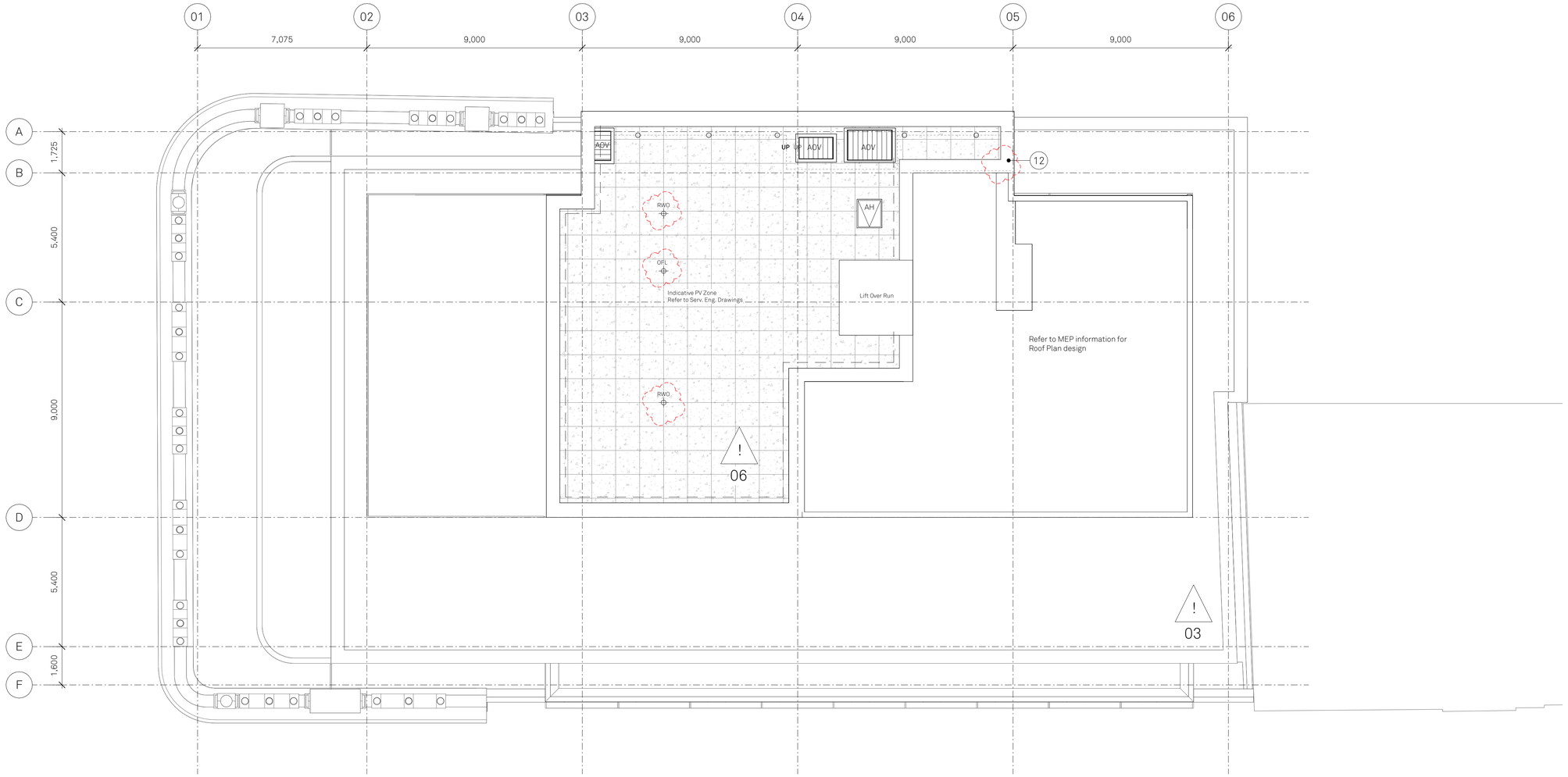

Copyright of this drawing is vested in Jon Matthews Architects and it must not be copied or reproduced without written consent. Figured dimensions only are to be taken from this drawing. Do not scale from this drawing.

All Contractors must visit the site and are responsible for taking and checking all dimensions relative to their work. Jon Matthews Architects are to be advised of any variation between drawings and site conditions.

Electronic data/ drawings issued as 'read only' and should not be interrogated for measurement. All dimensions and levels should be 'read only' from those values stated in text, on the drawings

CONSTRUCTION - It is considered that the proposed works are within the scope of a competent Contractor and as such no unusual hazards have been identified, refer to relevant Key/ Schedule/ Designers Risk Assessment

PLAN KEY:

F.C. Fire Curtain - Recessed
RWO Rainwater Outlet
OFL Rainwater Overflow
RWP Rainwater Pipe
Existing Basement extents
In Abeyance

ABEYANCE NOTE:

01 Column line position TBC with Structural Eng.
02 Rain water drainage position subject to further coordination
03 Thermal check in RIBA Stage 4
04 Basement waterproofing TBA
05 Door swing beyond ownership boundary. TBC
06 Rain water drain positions TBC
07 Internal wall line and secondary glazing line to be confirmed following further site investigations
08 Coordination with MEP designer regarding service routes and floor-to-underside of services heights
09 Interface with Party wall to be developed following further site investigation
10 Structural support of Grade II listed facade TBC with Structural engineer
11 Structural column & cladding line to be confirmed at next RIBA stage
12 Access and maintenance strategy to be agreed at next stage

RESIDUAL RISK

The following residual risks have been identified for this floor level:

01 - Retention of existing Grade II listed facade
02 - Double height space
03 - Building along party wall line with 46 Fountain Street
04 - Requirement for Access & Maintenance Strategy for information on cleaning/ maintenance of building facade.
05 - Refer to Asbestos Survey
06 - Maintenance work at height required at terrace/roof level

Rev.	Date:	Details:
P05	03/07/26	RIBA Stage 3 Issue
P04	19/06/26	WIP RIBA Stage 3 Issue
P03	01/09/21	Issued for Stage 2
P02	06/08/21	Issued for Information
P01	19/05/21	Issued for Information

Jon Matthews Architects
Union, 2-10 Albert Square, Manchester, M2 6LW

Project:
50 Fountain Street

Title:
Roof

Scale:	Origin Date:	Drawn:	Checked:
1:100@A1	04/22/21	VD	MH

Status:
S2

Drawing No:
142-JMA-B1-RF-P-A-022208

Rev:
P05

APPENDIX F

BELOW GROUND DRAINAGE DRAWINGS

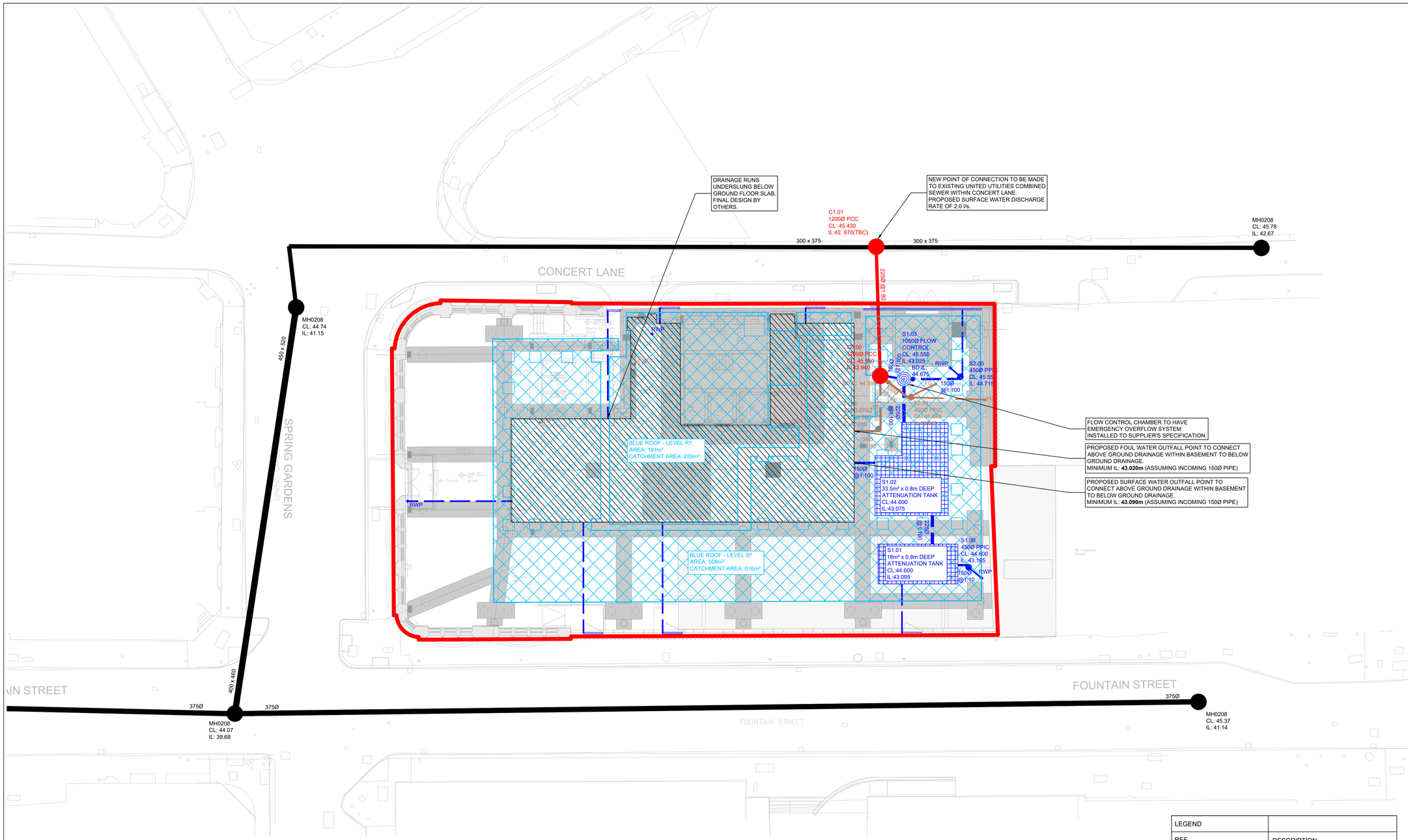

MH REF	CO-ORDINATES		COVER LEVEL (mAOD)	INVERT LEVEL (mAOD)	DEPTH TO INVERT (m)	DEPTH TO SOFFIT (m)	PIPES IN		PIPE OUT (mm)	INTERNAL SIZE (mm)	MANHOLE TYPE	COVER		COMMENTS
							SIZE (mm)	INVERT LEVEL mAOD)				SIZE	RATING	
S1.00	E: N:	384088.881 398229.413	44.600	43.185	1.415	1.265	100 Ø	43.235	150 Ø	450 Ø	PPIC	450x450	FACTA AAA	RECESSED RESTRICTOR CAP
S2.00	E: N:	384077.727 398238.406	45.550	44.715	0.835	0.685	100 Ø 100 Ø	44.765 44.765	150 Ø	450 Ø	PPIC	450x450	FACTA AAA	RECESSED RESTRICTOR CAP
S1.03	E: N:	384075.055 398235.106	45.550	43.025	2.525	2.300	225 Ø 150 Ø	43.025 44.675 BD	150 Ø	1050 Ø	PCC	600x600	FACTA AAA	RECESSED FLOW CONTROL
F1.00	E: N:	384076.598 398231.185	44.600	42.995	1.605	1.455	150 Ø	42.995	150 Ø	450 Ø	PPIC	450x450	FACTA AAA	RECESSED TRIPLE SEALED RESTRICTOR CAP
F2.00	E: N:	384076.422 398234.604	45.550	44.640	0.910	0.760	100 Ø 100 Ø	44.690 44.690	150 Ø	450 Ø	PPIC	450x450	FACTA AAA	RECESSED TRIPLE SEALED RESTRICTOR CAP
C1.00	E: N:	384073.688 398233.938	45.550	42.940	2.710	2.485	150 Ø 150 Ø 150 Ø	43.015 43.015 44.590 BD	225 Ø	1200 Ø	PCC	600x600	FACTA AAA	RECESSED TRIPLE SEALED
C1.01	E: N:	POSITIONED ON SITE	45.430	42.670 (TBC)	2.760	2.385	300x375 225 Ø	TBC	300x375	1200 Ø	PCC	600x600	D400	SEE DRAINAGE DETAILS

LEGEND	
REF	DESCRIPTION
	INDICATIVE PLANNING BOUNDARY
	PROPOSED SURFACE WATER DRAINAGE
	PROPOSED FOUL WATER DRAINAGE
	PROPOSED COMBINED WATER DRAINAGE
	EXISTING UNITED UTILITIES COMBINED SEWER
	PROPOSED ATTENUATION TANK
	PROPOSED BLUE ROOF ATTENUATION AREAS
	PROPOSED HYDROBRAKE FLOW CONTROL CHAMBER CHAMBER TO HAVE EMERGENCY OVERFLOW INSTALLED
	THRESHOLD DRAINS

NOTES

1. THIS DRAWING IS TO BE READ IN CONJUNCTION WITH ALL RENAISSANCE, ARCHITECTS, LANDSCAPE ARCHITECTS AND BUILDING SERVICES ENGINEERS DRAWINGS.
2. THE FINAL CONNECTION TO THE PUBLIC SEWER IS SUBJECT TO UNITED UTILITIES APPROVAL AND IS TO BE IN ACCORDANCE WITH THIER AGREED DETAILS.
3. ALL BELOW GROUND DRAINAGE WORKS TO BE IN ACCORDANCE WITH RELEVANT BUILDING REGULATIONS AND SEWER SECTOR GUIDANCE APPENDIX C- DESIGN AND CONSTRUCTION GUIDANCE. IF DISCREPANCIES ARE NOTED BETWEEN SSG AND DRAWINGS THESE SHOULD BE BROUGHT TO THE ATTENTION OF RENAISSANCE FOR REVIEW.
4. RWPs, SVPs, SSs AND FLOOR GULLEYS ARE TO HAVE RODDABLE ACCESS POINTS ABOVE GROUND FLOOR TO BUILDING SERVICES DETAILS.
5. SEWERS TO BE LAID IN CLASS S BEDDING (150mm DIA GRANULAR BED AND SURROUND). WHERE DEPTH OF COVER TO TOP OF THE SEWER IS LESS THAN; 1.2m IN HIGHWAYS OR VERGES, OR LESS THAN 0.9m IN PEDESTRIAN AREAS, THEN A 150mm DIA CONCRETE SLAB SHOULD BE PROVIEDED ABOVE THE GRANULAR RED AND SURROUND.REFER TO DETAILS SHEETS.
6. THE CONTRACTOR IS TO UNDERTAKE A FULL CCTV SURVEY AT COMPLETION OF THE PROJECT TO DEMONSTRATE THAT THE DRAINAGE IS CLEAN ANY DEFECTS ARE TO BE CORRECTED BY THE CONTRACTOR PRIOR TO HANDOVER OF THE SYSTEM TO THE CLIENT.
7. THE CONTRACTOR IS TO KEEP A RECORD SET OF THE AS INSTALLED DRAINAGE ON SITE AND PROVIDE THIS TO RENAISSANCE UPON COMPLETION OF THE WORKS TO ALLOW FOR PRODUCTION OF A 'FINAL CONSTRUCTION' ISSUE DRAWING.
8. DURING THE WORKS ALTERATIONS TO THE DRAINAGE LAYOUT ARE TO BE MARKED UP BY THE CONTRACTOR AND AGREED WITH RENAISSANCE IN WRITING.
9. THE CHAMBER SIZE OF PCC MANHOLES WITH MORE THAN ONE CONNECTION IN THEM MAY NEED TO BE INCREASED AN INCREMENT TO ACCOMMODATE THE CONNECTIONS AND BENDS.
10. MANHOLE COVERS ARE TO BE IN ACCORDANCE WITH BS EN 124 FOR THE RATING INDICATED IN THE MANHOLE SCHEDULE. THE CONTRACTOR IS TO SUBMIT DETAILS FOR THE PROPOSED MANHOLE COVERS TO THE ENGINEER AND LANDSCAPE ARCHITECT FOR REVIEW PRIOR TO INSTALLATION.
11. ALL INTERNAL COVERS TO BE RECESSED AND TRIPLE SEALED
12. COVER SLABS MUST CARRY THE BSI KITEMARK. WHERE THE CLEAR OPENING OF THE KITEMARKED PRODUCT IS DIFFERENT TO THAT OF THE COVER AND FRAME, A LOAD BEARING REDUCING SLAB SHOULD BE FITTED ABOVE THE COVER SLAB TO BRING THE SIZE DOWN TO REQUIRED SIZE.
13. ALL SEWERS TO BE BSI KITEMARK (CERTIFIED TO WIS 4-35-01)
14. ALL CONCRETE PIPES TO BE TO ES EN 1916 CLASS 120 (54kN/m).
15. BEDDING AND BACKFILL MATERIAL TO CONFORM TO THE REQUIREMENTS OF THE WATER INDUSTRY SPECIFICATION 4-08092 (TABLE A2).
16. IF PLASTIC PIPES ARE TO BE USED THEN THE FOLLOWING MUST APPLY:
A.BSI KITEMARK (CERTIFIED TO BS EN 13476-1 AND WIS 4-35-01)
B.PIPES LESS THAN OR EQUAL TO 500mm DIA
C.BEDDING AND BACKFILL MATERIAL TO CONFORM TO THE REQUIREMENTS OF THE WATER INDUSTRY SPECIFICATION 4-08092 (TABLE A2)
17. THE MINIMUM CRUSHING STRENGTH FOR CLAY PIPES SHOULD BE AS FOLLOWS: 100mm DIA. 40kN/m, 150mm DIA DIA. 40kN/m, 225mm DIA. 45kN/m AND 300mm DIA. 72kN/m.
18. THE MINIMUM CRUSHING STRENGTH FOR CONCRETE PIPES SHOULD BE -(CLASS 120 TO EN 1916/BS5911-1 2002). PLASTIC PIPES SHOULD CONFORM TO WIS 4-35-01 AND BS EN13476.
19. SULPHATE RESISTANT CEMENT (C20-DC3) AND PRECAST CONCRETE PRODUCTS MUST BE USED OR A LABORATORY REPORT PROVIDING THAT SUCH PRECAUTIONS ARE NOT NECESSARY.
20. SEWER PIPES TO BE LAID IN MAXIMUM 3 METER LENGTHS UNLESS THERE IS A SPECIFIC OPERATIONAL NEED TO LAY LONGER PIPES, AND THIS IS AGREED BY THE CONTRACTOR WITH THE PIPE MANUFACTURER.
21. ALL FOUL AND SURFACE WATER BELOW GROUND SYSTEMS ARE TO BE VENTED WITHIN THE ABOVE GROUND DRAINAGE TO THE BUILDING SERVICES ENGINEERS DETAILS.
22. ALLOW FOR ALL THE EXISTING SURFACE WATER DRAINAGE ON SITE TO BE GRUBBED UP AND BACKFILLED. ANY CONNECTIONS FROM THE SITE TO THE PUBLIC SEWER TO THE SITE ARE TO BE CAPPED AND GROUTED.

RIBA STAGE 4
THIS DRAWING IS INTENDED TO COMMUNICATE THE INTERIM PROGRESS OF THE TECHNICAL DESIGN AND IS APPROPRIATE FOR RIBA STAGE 4
A DESIGN CONTINGENCY OF 10-15% IS RECOMMENDED TO ALLOW FOR DESIGN DEVELOPMENT DURING RIBA STAGE 5 AND TO REFLECT INPUT FROM THE CONTRACTOR DESIGNED PACKAGES.

ATTENUATION TANK
ATTENUATION TANK TO BE DESIGNED FOR SUITABLE LOADING. SUPPLIERS TO UNDERTAKE DETAILED BUOYANCY CHECK AND ADVISE ON ANY TIE DOWN DETAILS.
ALLOW FOR VENT PIPE AND INSPECTION CHAMBERS.
ALL STORAGE VOLUMES ARE INDICATVIE ONLY AND SUBJECT TO CHANGE AS THE DESIGN PROGRESSES.

SVP & RWP SETTING OUT AND CALCULATIONS
SVP AND RWP LOCATIONS ARE INDICATIVE, FOR DETAILED SETTING OUT REFER TO ARCHITECTS DRAWINGS. ALL CONNECTIONS BETWEEN ABOVE GROUND DRAINAGE TO BE SIZED TO SUIT ABOVE GROUND DRAINAGE.

COVER LEVELS
LANDSCAPE ARCHITECT TO VALIDATE COVER LEVELS IN ALL EXTERNAL AREAS. ARCHITECT TO VALIDATE COVER LEVELS IN ALL INTERNAL AREAS.

Rev:	Description:	Date:	By:	Chkd:
P03	UPDATED TO SUIT COMMENTS	11.11.26	JA	AMc
P02	STAGE 4A ISSUE	16.10.26	JA	AMc
P01	STAGE 3 ISSUE	03.07.26	JA	AMc

renaissance
Renaissance Associates Ltd
2nd Floor Tribeca House
21-27 Dale Street
Manchester
M1 1EY

Project:
50 FOUNTAIN STREET, MANCHESTER

Drawing Title:
BELOW GROUND DRAINAGE GENERAL ARRANGEMENT

Status:
STAGE 4A

Size:	Date:	Drawn by:	Designed by:	Checked by:
A1	JUL 26	JA	JA	AMc

Scale: 1:150 | Project No: 2006-05

Project – Originator – Volume – Level – Type – Role – Number: FSM-REN-XX-00-DR-C-01100 | Revision: P03

This drawing has been prepared for the sole benefit, use and information of the client for the purpose set out in the instructions commissioning it. The liability of **renaissance** in the respect of the information contained in this drawing will not extend to any third party. This document should not be used in whole or part by any third parties without the express written permission of **renaissance**

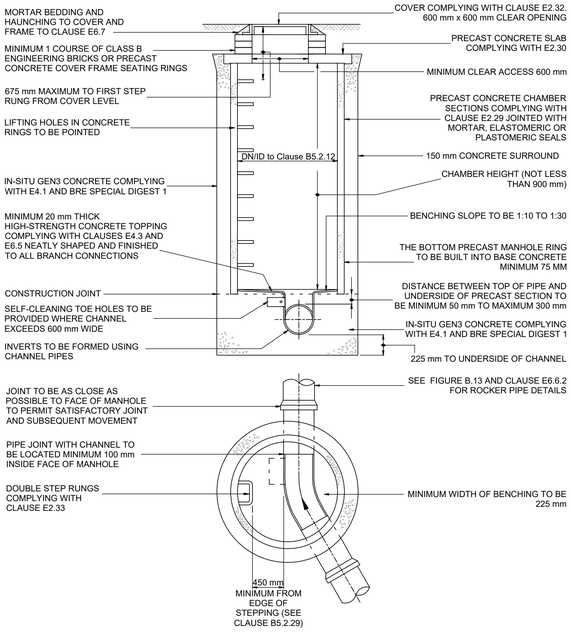

NOT TO SCALE

TYPICAL MANHOLE DETAIL - TYPE B

DEPTH FROM COVER LEVEL TO SOFFIT OF PIPE 1.5 M TO 3.0 M ALTERNATIVE RIGID MATERIAL CONSTRUCTION WITH CONCRETE SURROUND

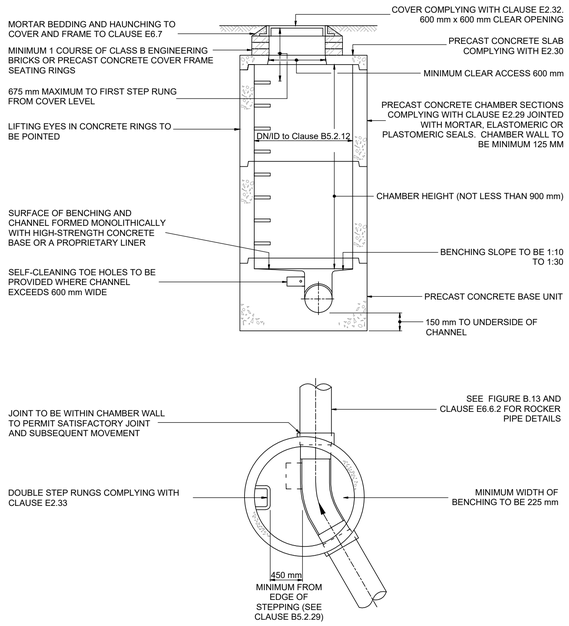

NOT TO SCALE

TYPICAL MANHOLE DETAIL - TYPE B

DEPTH FROM COVER LEVEL TO SOFFIT OF PIPE 1.5 M TO 3.0 M RIGID MATERIAL CONSTRUCTION WITHOUT CONCRETE SURROUND

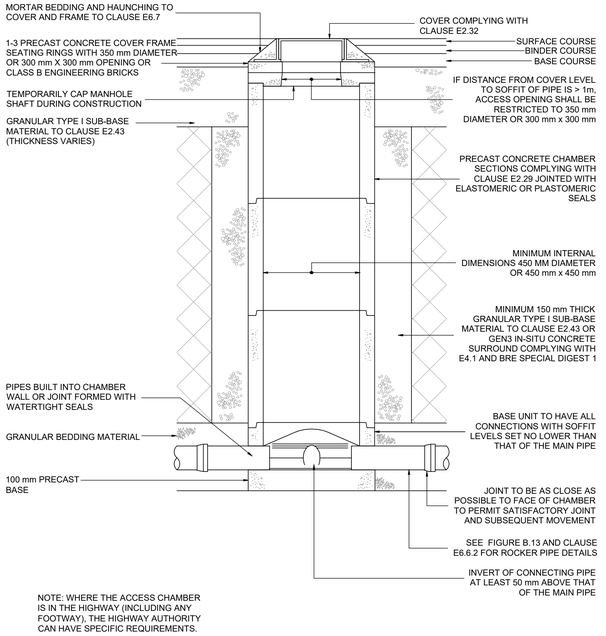

NOTE: WHERE THE ACCESS CHAMBER IS IN THE HIGHWAY (INCLUDING ANY FOOTWAY), THE HIGHWAY AUTHORITY CAN HAVE SPECIFIC REQUIREMENTS.

NOT TO SCALE

TYPICAL INSPECTION CHAMBER DETAIL - TYPE D

DEPTH FROM COVER LEVEL TO SOFFIT OF PIPE UP TO 2 M RIGID MATERIAL CONSTRUCTION FOR USE IN AREAS SUBJECT TO VEHICLE LOADING

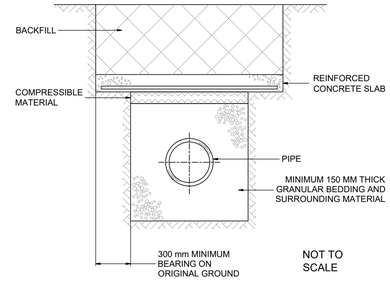

NOT TO SCALE

PROTECTION OF PIPES LAID AT SHALLOW DEPTHS

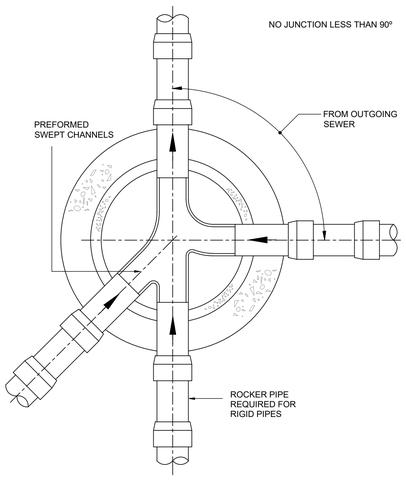

SECTIONAL PLAN

RIGID PIPES BUILT INTO MANHOLE SHOULD HAVE A FLEXIBLE JOINT AS CLOSE AS FEASIBLE TO THE EXTERNAL FACE OF THE STRUCTURE AND THE LENGTH OF THE NEXT ROCKER PIPE SHOULD BE AS SHOWN.

NOMINAL DIAMETER (mm)	MAXIMUM EFFECTIVE LENGTH (m)
150 - 600	0.6
601 - 750	1.00
over 750	1.25

NOT TO SCALE

ALL PIPES ENTERING THE BOTTOM OF THE MANHOLE TO HAVE SOFFITS LEVEL.

TYPICAL ARRANGEMENT OF PIPE JUNCTIONS WITHIN MANHOLES

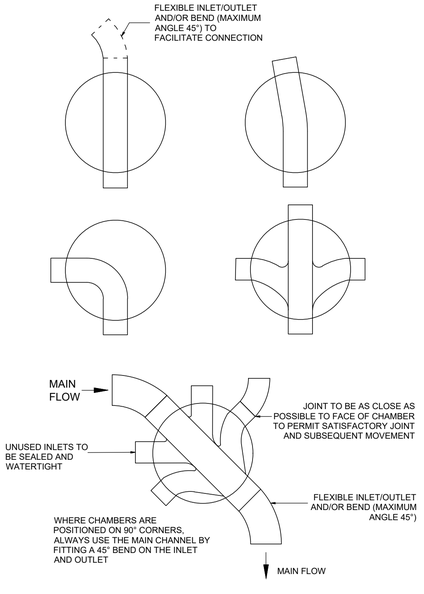

NOTE: WHERE A BEND IS USED IMMEDIATELY OUTSIDE THE MANHOLE, THIS MAY BE USED AS THE ROCKER PIPE.

NOT TO SCALE

TYPICAL BASE LAYOUTS FOR TYPE D CHAMBERS

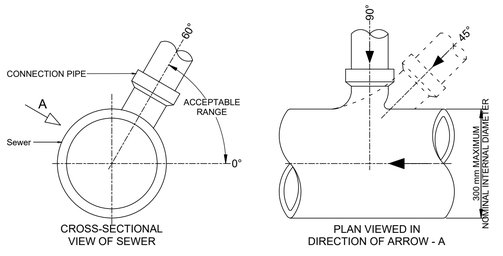

TYPICAL SADDLE CONNECTION DETAIL INTO SEWERS

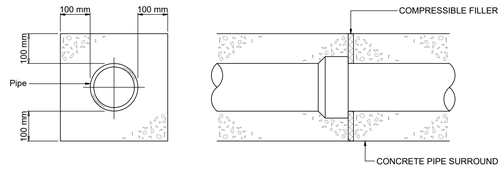

SPIGOT AND SOCKET JOINT

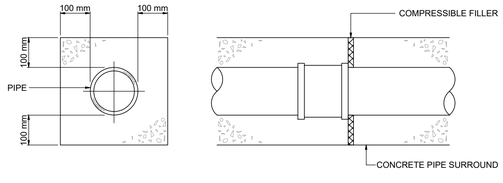

SLEEVE JOINT

NOT TO SCALE

TYPICAL JOINT DETAILS FOR CONCRETE ENCASED PIPES

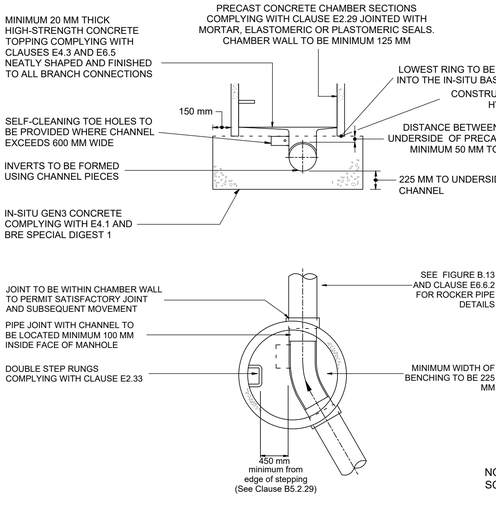

NOT TO SCALE

ALTERNATIVE BASE DETAIL FOR TYPE A AND B MANHOLES WITHOUT CONCRETE SURROUND

NOTES:

1. FOR GENERAL NOTES REFER TO RENAISSANCE DRAWING FSM-REN-XX-XX-DR-C-01100.
2. DO NOT SCALE FROM THIS DRAWING. ANY AMBIGUITIES OMISSIONS AND ERRORS ON DRAWINGS SHALL BE BROUGHT TO THE ENGINEERS ATTENTION IMMEDIATELY. ALL DIMENSIONS TO BE CHECKED/ VERIFIED ON SITE.
3. THIS DRAWING IS TO BE READ IN CONJUNCTION WITH ALL RENAISSANCE, ARCHITECTS, LANDSCAPE ARCHITECTS AND BUILDING SERVICES ENGINEERS DRAWINGS.
4. ALL DIMENSIONS ARE IN MILLIMETRES UNO
5. ALL BELOW GROUND DRAINAGE WORKS TO BE IN ACCORDANCE WITH RELEVANT BUILDING REGULATIONS AND SEWER SECTOR GUIDANCE APPENDIX C- DESIGN AND CONSTRUCTION GUIDANCE. IF DISCREPANCIES ARE NOTED BETWEEN SSG AND DRAWINGS THESE SHOULD BE BROUGHT TO THE ATTENTION OF RENAISSANCE FOR REVIEW.
6. THE CHAMBER SIZE OF PCC MANHOLES WITH MORE THAN ONE CONNECTION IN THEM MAY NEED TO BE INCREASED AN INCREMENT TO ACCOMMODATE THE CONNECTIONS AND BENDS.
7. MANHOLE COVERS ARE TO BE ACCORDANCE WITH BS EN 124 FOR THE RATING INDICATED IN THE MANHOLE SCHEDULE. THE CONTRACTOR IS TO SUBMIT DETAILS FOR THE PROPOSED MANHOLE COVERS TO THE ENGINEER AND LANDSCAPE ARCHITECT FOR REVIEW PRIOR TO INSTALLATION.
8. ALL INTERNAL COVERS TO BE RECESSED AND TRIPLE SEALED
9. COVER SLABS MUST CARRY THE BSI KITEMARK. WHERE THE CLEAR OPENING OF THE KITEMARKED PRODUCT IS DIFFERENT TO THAT OF THE COVER AND FRAME, A LOAD BEARING REDUCING SLAB SHOULD BE FITTED ABOVE THE COVER SLAB TO BRING THE SIZE DOWN TO REQUIRED SIZE.
10. ALL SEWERS TO BE BSI KITEMARK (CERTIFIED TO WIS 4-35-01)
11. ALL CONCRETE PIPES TO BE TO ES EN 1916 CLASS 120 (54kN/m).
12. BEDDING AND BACKFILL MATERIAL TO CONFORM TO THE REQUIREMENTS OF THE WATER INDUSTRY SPECIFICATION 4-08092 (TABLE A2).
13. IF PLASTIC PIPES ARE TO BE USED THEN THE FOLLOWING MUST APPLY:
    A.BSI KITEMARK (CERTIFIED TO BS EN 13476-1 AND WIS 4-35-01)
    B.PIPES LESS THAN OR EQUAL TO 500mm DIA
    C.BEDDING AND BACKFILL MATERIAL TO CONFORM TO THE REQUIREMENTS OF THE WATER INDUSTRY SPECIFICATION 4-08092 (TABLE A2)
14. THE MINIMUM CRUSHING STRENGTH FOR CLAY PIPES SHOULD BE AS FOLLOWS: 100mm DIA. 40kN/m, 150mm DIA. 40kN/m, 225mm DIA. 45kN/m AND 300mm DIA. 72kN/m.
15. THE MINIMUM CRUSHING STRENGTH FOR CONCRETE PIPES SHOULD BE - (CLASS 120 TO EN 1916/BS5911-1 2002). PLASTIC PIPES SHOULD CONFORM TO WIS 4-35-01 AND BS EN13476.
16. SULPHATE RESISTANT CEMENT (C20-DC2) AND PRECAST CONCRETE PRODUCTS MUST BE USED OR A LABORATORY REPORT PROVIDED PROVIDING THAT SUCH PRECAUTIONS ARE NOT NECESSARY.
17. CONCRETE BENCHING AND PIPE SURROUND SHALL BE PLACED IN SINGLE CONTINUOUS OPERATION FROM TOP OF BASE SLAB TO TOP OF BENCHING AND PIPESURROUND.
18. CONNECTION INTO MANHOLES SHALL BE CONSTRUCTED WITH THE SOFFITS AT THE LEVEL UNLESS DETAILED DIFFERENTLY ON CONTRACT DRAWINGS.
19. METALWORK
    LADDERS, HANDRAILING AND SAFETY CHAIN REFER TO DETAILS
20. CONCRETE SURROUND TO MANHOLES
    A CONCRETE SURROUND IS NOT NORMALLY REQUIRED TO UNLESS INSTALLED IN AREAS OF UNSTABLE GROUND, UNDER CONDITIONS OF FLOTATION OR WHERE SUBJECTED TO EXCEPTIONAL OR ECCENTRIC LOADS. IN WHICH CASES A 150 SURROUND OF AT LEAST 20 N/mm CONCRETE SHALL BE PROVIDED. ANY JOINTS SHOULD BE STAGGERED WITH PRECAST CONCRETE JOINTS
21. CUT ENDS OF REINFORCED CONCRETE PIPES SHALL BE TREATED WITH EPOXY RESIN PAINT/MORTAR
22. MINIMUM LENGTH OF CHANNEL (X Min)

CHAMBER DIA	"X" Min
1200	950
1500	1050
1800	1150
2100	1300
2400	1450
2700	1550
3000	1700

23. DOUBLE STEPS SHALL BE PLASTIC ENCAPSULATED CARBON STEEL TO BS EN 1247-2. DOUBLE STEPS SHALL NOT BE USED WHERE COVER-TO-SOFFIT DIMENSION IS >3.0m
24. COVER AND FRAME
    150mm DEEP COVERS ARE TO BE USED IN CATEGORY 1,2, 3 ROADS
    100mm DEEP COVERS ARE TO BE USED IN CATEGORY 4 ROADS.
    FRAME TO BE SET AS PER SPECIFICATION
25. CONCRETE
    ALL IN-SITU CONCRETE TO BE DC - 3 OR FND3.

Rev:	Description:	Date:	By:	Chkd:
P02	STAGE 4A ISSUE	16.10.26	JA	AMc
P01	STAGE 3 ISSUE	03.07.26	JA	AMc

renaissance
Renaissance Associates Ltd
2nd Floor, Tribeca House
21-27 Dale Street,
Manchester
M1 1EY

Project:

50 FOUNTAIN STREET, MANCHESTER

Drawing Title:

BELOW GROUND DRAINAGE DETAILS SHEET 1

Status:

STAGE 4A

Size:	Date:	Drawn by:	Designed by:	Checked by:
A1	JUL 26	JA	--	AMc

Scale:	Project No:
NTS	2006-05

Project - Originator - Volume - Level - Type - Role - Number:	Revision:
FSM-REN-XX-00-DR-C-03100	P02

This drawing has been prepared for the sole benefit, use and information of the client for the purpose set out in the instructions commissioning it. The liability of **renaissance** in the respect of the information contained in this drawing will not extend to any third party. This document should not be used in whole or part by any third parties without the express written permission of **renaissance**

NOTES:

1. FOR GENERAL NOTES REFER TO RENAISSANCE DRAWING FSM-REN-XX-00-DR-C-01100 . FOR DRAINAGE NOTES REFER TO FSM-REN-XX-00-DR-C-03100 .
2. DO NOT SCALE FROM THIS DRAWING. ANY AMBIGUITIES OMISSIONS AND ERRORS ON DRAWINGS SHALL BE BROUGHT TO THE ENGINEERS ATTENTION IMMEDIATELY. ALL DIMENSIONS TO BE CHECKED/ VERIFIED ON SITE.

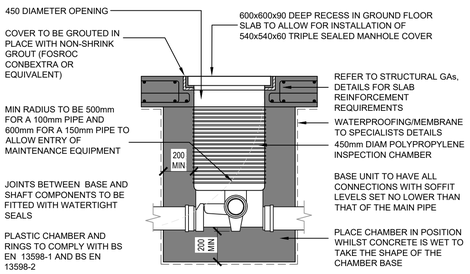

POLYPROPYLENE INSPECTION CHAMBER (WITHIN GROUND FLOOR SLAB) - MAX 2000MM DEPTH

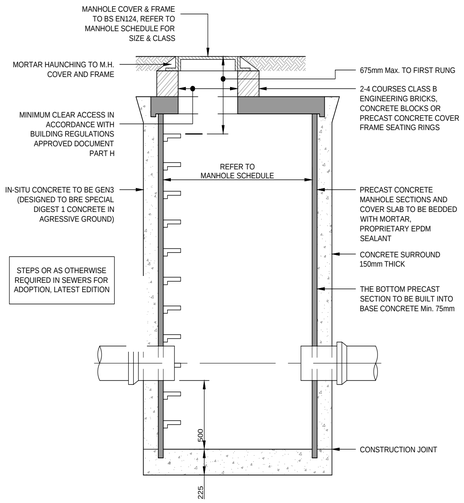

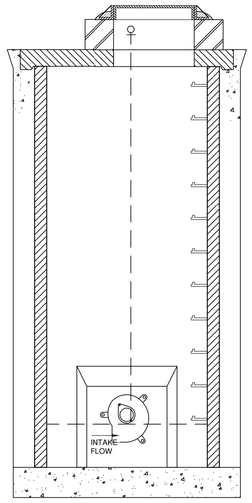

SECTION A-A

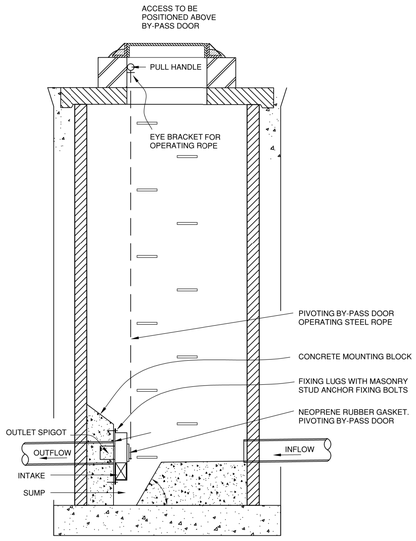

SECTION B-B

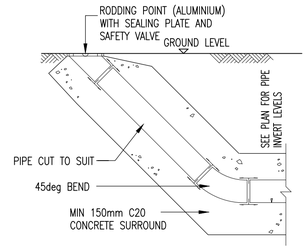

RODDING EYE DETAIL

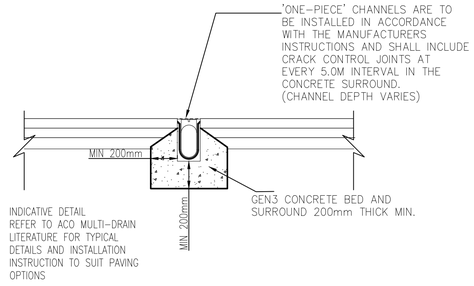

ACO CHANNEL DETAIL

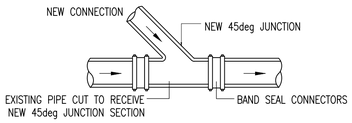

BRANCH INSERTION DETAIL

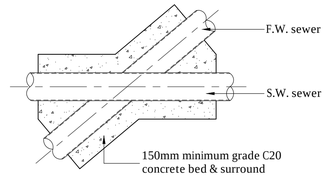

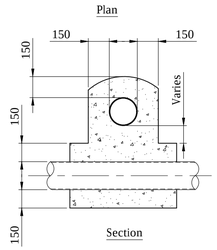

TYPICAL CROSS-OVER DETAIL TO FOUL AND SURFACE WATER SEWERS

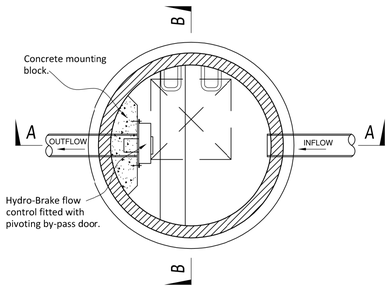

MANHOLE - SILT TRAP

TYPICAL PLAN OF HYDRO-BRAKE MANHOLE



DRAINAGE PASSING THROUGH SUBSTRUCTURE

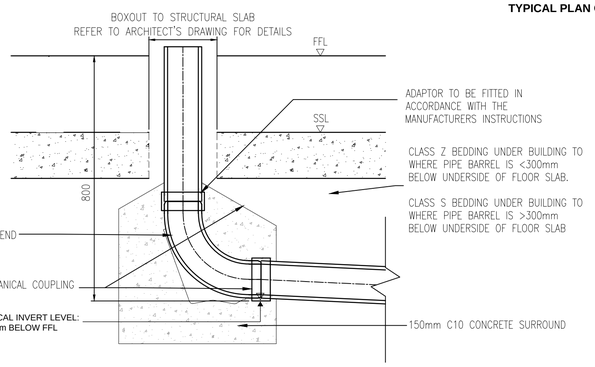

TYPICAL REST BEND DETAIL

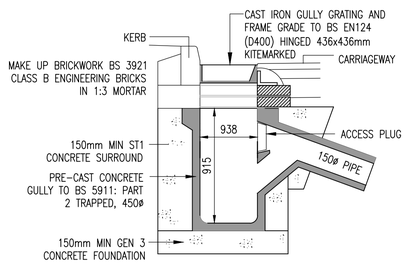

TYPICAL PRECAST CONCRETE ROAD GULLY DETAIL

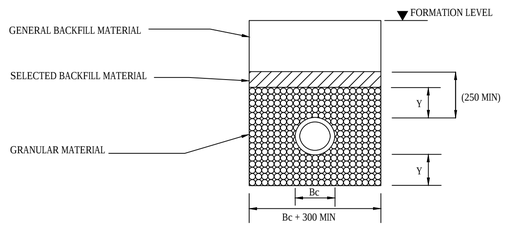

CLASS S DETAIL

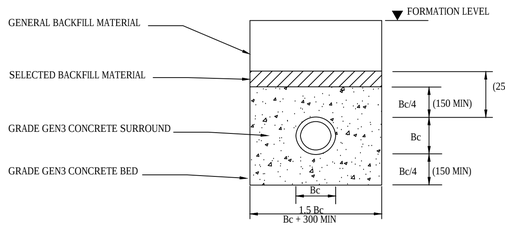

CLASS Z DETAIL

NOMINAL PIPE DIA. (mm)	SINGLE SIZED. (mm)	GRADED. (mm)
150 200 TO 300 375 TO 525 GREATER THAN 525	10 OR 14 10,14 OR 20 14 OR 20 14,20 OR 40	14 TO 5 14 TO 5 OR 20 TO 5 14 TO 5 OR 20 TO 5 14 TO 5,20 TO 5 OR 40 TO 5

GRANULAR BEDDING MATERIAL
(ALL AGGREGATES TO TABLE 4 OF BS 882 :1983)

NOTES:
A) Bc = OUTSIDE DIAMETER OF PIPE BARREL

B) Y = FOR UNIFORM SOILS: SLEEVE JOINTED PIPES, MIN. 50mm OR 1/6Bc, WHICHEVER IS THE GREATER. SOCKETED PIPE, MIN. 100mm OR 1/6Bc, WHICHEVER IS THE GREATER UNDER BARRELS AND NOT LESS THAN 50mm UNDER SOCKETS.
FOR ROCK OR MIXED SOILS CONTAINING ROCK BANDS, BOULDERS, STONES OR OTHER IRREGULAR HARD SPOTS: SLEEVE JOINTED PIPES, MIN. 150mm OR 1/4Bc, WHICHEVER IS THE GREATER. SOCKETED PIPE, MIN. 200mm OR 1/4Bc, WHICHEVER IS THE GREATER UNDER.

SUITABLE FILL:- THE SUITABLE FILL SHALL BE SUITABLE FOR THE LOCATION AND SHALL BE CAREFULLY COMPACTED TO PROVIDE STABILITY WITHOUT DAMAGING THE PIPE.
FILL UNDER CAR PARKING AREAS AND PRIVATE ROADS TO BE WELL COMPACTED GRADED MATERIAL. FILL UNDER ADOPTED ROADS TO BE TYPE 1 GRANULAR SUB-BASE.

WHERE THE PIPES ARE TO BE ADOPTED CLASS S BEDDING TO BE USED FOR EITHER RIGID OR FLEXIBLE PIPES

SIZE OF BEDDING MATERIAL - ALL GRANULAR MATERIAL TO BE SINGLE SIZED OR GRADED IN ACCORDANCE WITH BS 882.BS1047,BS3797		
PIPE DIAMETER	NOMINAL SINGLE SIZED	GRADED
UP TO 100mm	10mm	
OVER 100mm TO 150mm	10mm or 14mm	5mm to 14mm
OVER 150mm TO 300mm	10mm,14mm or 20mm	5mm to 14mm or 5mm to 20mm
OVER 300mm TO 550mm	14mm or 20mm	5mm to 14mm or 5mm to 20mm
OVER 550mm	14mm, 20mm or 40mm	5mm to 14mm or 5mm to 20mm or 5mm to 40mm

Trench widths	
Dia. of drain	Width
100 150 225	450 600 700
300 375 450	750 1050 1150
525 600 675	1200 1350 1450
750 825 900	1500 1600 1900
975 1050 1200	2000 2300 2300
Over 1200	Dia. + 1000

LIMITS OF COVER IN ANY WIDTH OF TRENCH			
NOMINAL SIZE	LAID IN FIELDS	LAID IN LIGHT ROADS	LAID IN MAIN ROADS
CLASS 120 CLAYWARE PIPES (CLASS B BEDDING)			
100-150mm	0.6m - 8.0m	1.2m - 8.0m	1.2m - 8.0m
225mm	0.6m - 5.0m	1.2m - 5.0m	1.2m - 4.5m
400mm	0.6m - 4.5m	1.2m - 4.5m	1.2m - 4.0m
600mm	0.6m - 4.5m	1.2m - 4.5m	1.2m - 4.0m
CLASS M CONCRETE PIPES (CLASS B BEDDING)			
300mm	0.6m - 3.0m	1.2m - 3.0m	1.2m - 2.5m
450mm	0.6m - 3.5m	1.2m - 3.5m	1.2m - 2.5m
600mm	0.6m - 3.5m	1.2m - 3.5m	1.2m - 3.0m
THERMOPLASTIC PIPES (CLASS S BEDDING)			
100 - 300mm	0.6m - 7.0m	0.9m - 7.0m	0.9m - 7.0m

WHERE COVER IS LESS THAN THE ALLOWABLE DEPTH PIPES TO HAVE A CLASS Z CONCRETE SURROUND OR CONCRETE COVER SLAB PROTECTION

CONCRETE PROTECTION	
CLASS 1 SULPHATE CONDITIONS	
ADOPTABLE STANDARDS AND AREAS SUBJECT TO HEAVY LOADING	GEN3 OR GEN 3
AREAS SUBJECT TO LIGHT LOADING eg. PRIVATE DRIVES, SMALL CAR PARKS	GEN1 OR ST2
FOR BURIED CONCRETE EXPOSED TO SULPHATE CONDITIONS	
CLASS 2 CLASS 3 CLASS 4A CLASS 4B	FND 2 FND 3 FND 4A FND 4B

PRODUCT NAME	DIAMETER (mm)	MANUFACTURER	MATERIAL
Supersleve	100&150 (I.D)	Hepworth	Vitrified Clay
Superseal	100&225 (I.D)	Hepworth	Vitrified Clay
Densleeve	100,150&225 (I.D)	Naylor	Vitrified Clay
Denseal	100,150&225 (I.D)	Naylor	Vitrified Clay
Ultra-Drain	110&160 (O.D)	Uponor	uPVC
Plastidrain	110&160 (O.D)	Hepworth	uPVC
Osmadrain	110&160 (O.D)	Wavin	uPVC
Osma Ultrarib	150&225 (I.D)	Wavin	uPVC
Solid Wall	110&160 (O.D)	Marley	uPVC
Quantum	150&225 (I.D)	Marley	uPVC
Underground Drain	110&160 (O.D)	Polypipe	uPVC
Ridgisewer	150&225 (I.D)	Polypipe	uPVC

MANUFACTURER	PRODUCT NAME	MATERIAL	MAX DEPTH
Naylor	Plastic Inspection Chamber	Polypropylene	Up to 1200mm
Hepworth	PPIC	Polypropylene	Up to 1200mm
Uponor	Inspection Chamber (450mmØ)	Polypropylene	Up to 1200mm
Marshalls	Inspection Chamber To BS5911 pt2	Precast concrete	Up to 1000mm
Wavin	Osma Ultrarib Inspection Chamber	Polypropylene	Up to 1200mm
Wavin	OsmaDrain Universal Inspection Chamber	Polypropylene	Up to 1200mm
Wavin	Non Entry Inspection Chamber	Polypropylene	Up to 2000mm
Marley	Inspection Chamber (450mmØ)	Polypropylene	Up to 1200mm
Polypipe	110mm Inspection Chamber (460mmØ)	Polypropylene	Up to 1200mm

Rev:	Description:	Date:	By:	Chkd:
P02	STAGE 4A ISSUE	16.10.26	JA	AMc
P01	STAGE 3 ISSUE	03.07.26	JA	AMc

renaissance
Renaissance Associates Ltd
2nd Floor, Tribeca House
21-27 Dale Street,
Manchester
M1 1EY

Project:

50 FOUNTAIN STREET, MANCHESTER

Drawing Title:

BELOW GROUND DRAINAGE DETAILS SHEET 2

Status:

STAGE 4A

Size:	Date:	Drawn by:	Designed by:	Checked by:
A1	JUL 26	JA	--	AMc

Scale:	Project No:
NTS	2006-05

Project - Originator - Volume - Level - Type - Role - Number: FSM-REN-XX-00-DR-C-03101

Revision: P02

This drawing has been prepared for the sole benefit, use and information of the client for the purpose set out in the instructions commissioning it. The liability of **renaissance** in the respect of the information contained in this drawing will not extend to any third party. This document should not be used in whole or part by any third parties without the express written permission of **renaissance**

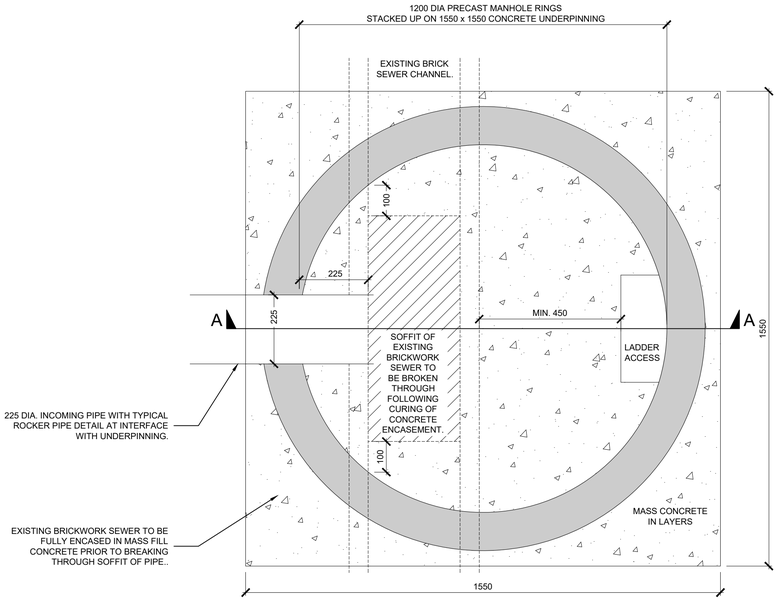

INDICATIVE MANHOLE DETAIL OVER MASONRY SEWER - PLAN
SCALE 1:10

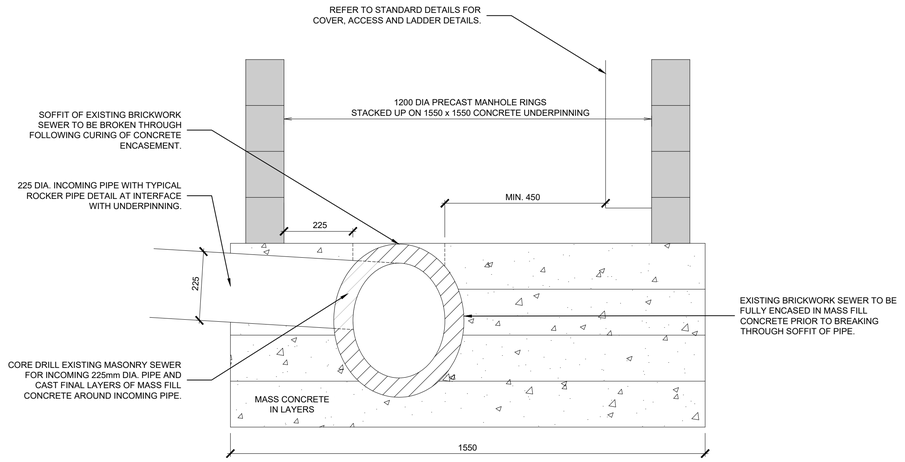

INDICATIVE MANHOLE DETAIL OVER EXISITNG MASONRY SEWER - SECTION A-A
SCALE 1:10

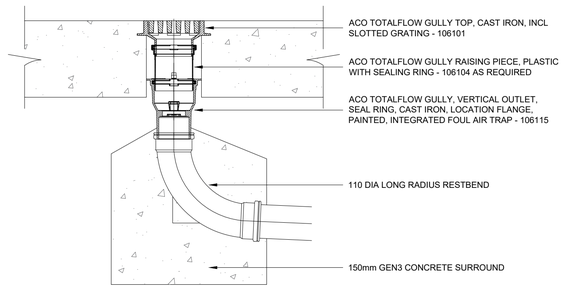

INTERNAL FLOOR GULLY DETAIL

NOTES:

1. FOR GENERAL NOTES REFER TO RENAISSANCE DRAWING FSM-REN-XX-00-DR-C-01100 . FOR DRAINAGE NOTES REFER TO FSM-REN-XX-00-DR-C-03100 AND FSM-REN-XX-00-DR-C-03101.
2. DO NOT SCALE FROM THIS DRAWING. ANY AMBIGUITIES OMISSIONS AND ERRORS ON DRAWINGS SHALL BE BROUGHT TO THE ENGINEERS ATTENTION IMMEDIATELY. ALL DIMENSIONS TO BE CHECKED/ VERIFIED ON SITE.

Rev:	Description:	Date:	By:	Chkd:
P01	STAGE 4A ISSUE	16.10.26	JA	AMc

renaissance
Renaissance Associates Ltd
2nd Floor, Tribeca House
21-27 Dale Street,
Manchester
M1 1EY

Project:
50 FOUNTAIN STREET, MANCHESTER

Drawing Title:
BELOW GROUND DRAINAGE DETAILS SHEET 3

Status:
STAGE 4A

Size:	Date:	Drawn by:	Designed by:	Checked by:
A1	OCT 26	JA	--	AMc

Scale:	Project No:
NTS	2006-05

Project - Originator - Volume - Level - Type - Role - Number:	Revision:
FSM-REN-XX-00-DR-C-03102	P01

This drawing has been prepared for the sole benefit, use and information of the client for the purpose set out in the instructions commissioning it. The liability of **renaissance** in the respect of the information contained in this drawing will not extend to any third party. This document should not be used in whole or part by any third parties without the express written permission of **renaissance**

APPENDIX G

GREENFIELD RUN-OFF CALCLATIONS

Greenfield runoff rate estimation tool

www.uksuds.com | Greenfield runoff rate estimation tool (https://www.uksuds.com/)

This is an estimation of the greenfield runoff rates that are used to meet normal best practice criteria in line with Environment Agency guidance “Rainfall runoff management for developments”, SC030219 (2013), the SuDS Manual C753 (CIRIA, 2015) and the non-statutory standards for SuDS (Defra, 2015). This information on greenfield runoff rates may be the basis for setting consents for the drainage of surface water runoff from sites.

Project details

Date	18/05/2026
Calculated by	JA
Reference	FSM
Model version	2.2.3

Location

Site name	50 Fountain Street
Site location	Manchester

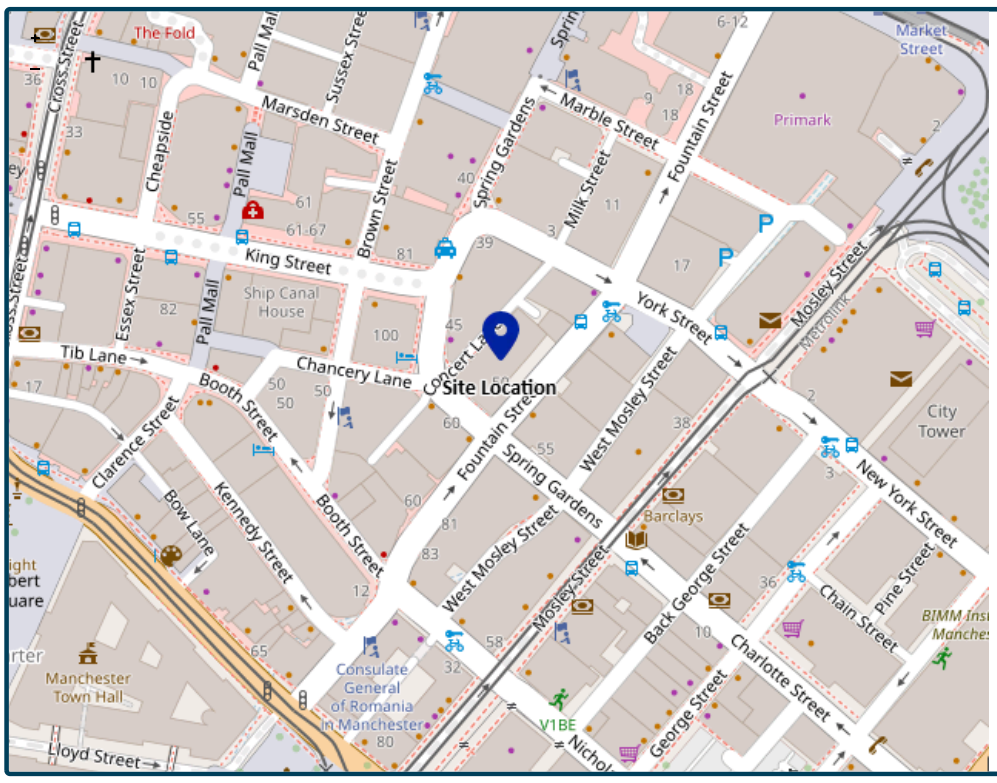

© OpenStreetMap (https://www.openstreetmap.org/copyright) contributors.

Site easting (British National Grid)	384066
Site northing (British National Grid)	398210

Site details

Total site area (ha)	0.115 ha

Greenfield runoff

Method

Method	FEH statistical (2025)

FEH statistical (2025)

	My value	Map value
SAAR9120 (mm)	900 mm	
BFIHOST19scaled	0.423	
QMed-QBar conversion	1.075	1.075
QMed (l/s)	0.7 l/s	
QBar (FEH statistical 2025) (l/s)	0.7 l/s	

Growth curve factors

	My value	Map value
Hydrological region	10	10
1 year growth factor	0.87	
2 year growth factor	0.93	
10 year growth factor	1.38	
30 year growth factor	1.7	
100 year growth factor	2.08	
200 year growth factor	2.37	

We use cookies on this site to enhance your user experience
By clicking the Accept button, you agree to us doing so.
OK, I AGREE
MORE INFO

Results

Method	FEH statistical (2025)	
Flow rate 1 year (l/s)	0.6	l/s
Flow rate 2 year (l/s)	0.7	l/s
Flow rate 10 years (l/s)	1.0	l/s
Flow rate 30 years (l/s)	1.3	l/s
Flow rate 100 years (l/s)	1.5	l/s
Flow rate 200 years (l/s)	1.8	l/s

Please note runoff estimation is subject to significant uncertainty. Results are therefore normally reported to only 1 decimal place. Where 2 decimal places are provided, this does not indicate accuracy to this level, it has been adopted to prevent 'zero' figures from being reported. Outputs less than 0.01 l/s are reported as 0.01 l/s.

Disclaimer

This report was produced using the Greenfield runoff rate estimation tool (2.2.3) developed by HR Wallingford and available at uksuds.com (https://www.uksuds.com/). The use of this tool is subject to the UK SuDS terms and conditions and licence agreement, which can both be found at uksuds.com/terms-conditions (https://www.uksuds.com/terms-conditions). The outputs from this tool have been used to estimate Greenfield runoff rates. The use of these results is the responsibility of the users of this tool. No liability will be accepted by HR Wallingford, the Environment Agency, Centre for Ecology and Hydrology, Wallingford Hydrosolutions or any other organisation for the use of these data in the design or operational characteristics of any drainage scheme.

We use cookies on this site to enhance your user experience

By clicking the Accept button, you agree to us doing so.

APPENDIX H

BROWNFIELD RUN-OFF CALCLATIONS

STORM SEWER DESIGN by the Modified Rational Method

Design Criteria for Storm

Pipe Sizes STANDARD Manhole Sizes STANDARD

FSR Rainfall Model - England and Wales

Return Period (years)	100	PIMP (%)	100
M5-60 (mm)	18.000	Add Flow / Climate Change (%)	0
Ratio R	0.359	Minimum Backdrop Height (m)	0.200
Maximum Rainfall (mm/hr)	50	Maximum Backdrop Height (m)	1.500
Maximum Time of Concentration (mins)	30	Min Design Depth for Optimisation (m)	1.200
Foul Sewage (l/s/ha)	0.000	Min Vel for Auto Design only (m/s)	1.00
Volumetric Runoff Coeff.	0.750	Min Slope for Optimisation (1:X)	500

Designed with Level Soffits

Time Area Diagram for Storm

Time (mins)	Area (ha)	Time (mins)	Area (ha)
0-4	0.097	4-8	0.018

Total Area Contributing (ha) = 0.115

Total Pipe Volume (m³) = 1.194

Network Design Table for Storm

PN	Length (m)	Fall (m)	Slope (1:X)	I.Area (ha)	T.E. (mins)	Base Flow (l/s)	k (mm)	HYD SECT	DIA (mm)	Section Type	Auto Design
1.000	8.774	0.135	65.0	0.065	5.00	0.0	0.600	o	150	Pipe/Conduit	
1.001	8.416	0.129	65.0	0.016	0.00	0.0	0.600	o	225	Pipe/Conduit	
1.002	1.132	0.145	7.8	0.017	0.00	0.0	0.600	o	225	Pipe/Conduit	
2.000	0.935	0.012	80.0	0.000	5.00	0.0	0.600	o	100	Pipe/Conduit	
2.001	0.818	0.010	80.0	0.000	0.00	0.0	0.600	o	100	Pipe/Conduit	
2.002	10.218	0.128	80.0	0.017	0.00	0.0	0.600	o	225	Pipe/Conduit	

Network Results Table

PN	Rain (mm/hr)	T.C. (mins)	US/IL (m)	Σ I.Area (ha)	Σ Base Flow (l/s)	Foul (l/s)	Add Flow (l/s)	Vel (m/s)	Cap (l/s)	Flow (l/s)
1.000	50.00	5.12	43.510	0.065	0.0	0.0	0.0	1.25	22.1	8.8
1.001	50.00	5.20	43.300	0.081	0.0	0.0	0.0	1.62	64.6	11.0
1.002	50.00	5.21	43.171	0.098	0.0	0.0	0.0	4.71	187.4	13.3
2.000	50.00	5.02	43.300	0.000	0.0	0.0	0.0	0.86	6.8	0.0
2.001	50.00	5.03	43.288	0.000	0.0	0.0	0.0	0.86	6.8	0.0
2.002	50.00	5.15	43.153	0.017	0.0	0.0	0.0	1.46	58.2	2.3

©1982-2020 Innovyze

Network Design Table for Storm

PN	Length (m)	Fall (m)	Slope (1:X)	I.Area (ha)	T.E. (mins)	Base Flow (l/s)	k (mm)	HYD SECT	DIA (mm)	Section Type	Auto Design
1.003	6.017	0.093	65.0	0.000	0.00	0.0	0.600	o	225	Pipe/Conduit	

Network Results Table

PN	Rain (mm/hr)	T.C. (mins)	US/IL (m)	Σ I.Area (ha)	Σ Base Flow (l/s)	Foul (l/s)	Add Flow (l/s)	Vel (m/s)	Cap (l/s)	Flow (l/s)
1.003	50.00	5.27	43.025	0.115	0.0	0.0	0.0	1.62	64.6	15.6

©1982-2020 Innovyze

Area Summary for Storm

Pipe Number	PIMP Type	PIMP Name	PIMP (%)	Gross Area (ha)	Imp. Area (ha)	Pipe Total (ha)
1.000	-	-	100	0.065	0.065	0.065
1.001	-	-	100	0.016	0.016	0.016
1.002	-	-	100	0.017	0.017	0.017
2.000	-	-	100	0.000	0.000	0.000
2.001	-	-	100	0.000	0.000	0.000
2.002	-	-	100	0.017	0.017	0.017
1.003	-	-	100	0.000	0.000	0.000
				Total	Total	Total
				0.115	0.115	0.115

Free Flowing Outfall Details for Storm

Outfall Pipe Number	Outfall Name	C. Level (m)	I. Level (m)	Min I. Level (m)	D,L (mm)	W (mm)
1.003		45.160	42.933	0.000	0	0

Simulation Criteria for Storm

Volumetric Runoff Coeff	0.750	Additional Flow - % of Total Flow	0.000
Areal Reduction Factor	1.000	MADD Factor * 10m³/ha Storage	2.000
Hot Start (mins)	0	Inlet Coeffiecient	0.800
Hot Start Level (mm)	0	Flow per Person per Day (l/per/day)	0.000
Manhole Headloss Coeff (Global)	0.500	Run Time (mins)	60
Foul Sewage per hectare (l/s)	0.000	Output Interval (mins)	1

Number of Input Hydrographs	0	Number of Storage Structures	0
Number of Online Controls	0	Number of Time/Area Diagrams	0
Number of Offline Controls	0	Number of Real Time Controls	0

Synthetic Rainfall Details

Rainfall Model	FSR	Profile Type	Summer
Return Period (years)	100	Cv (Summer)	0.750
Region	England and Wales	Cv (Winter)	0.840
M5-60 (mm)	18.000	Storm Duration (mins)	30
Ratio R	0.359		

©1982-2020 Innovyze

1 year Return Period Summary of Critical Results by Maximum Outflow (Rank 1) for Storm

Simulation Criteria

Areal Reduction Factor	1.000	Additional Flow - % of Total Flow	0.000
Hot Start (mins)	0	MADD Factor * 10m³/ha Storage	2.000
Hot Start Level (mm)	0	Inlet Coeffiecient	0.800
Manhole Headloss Coeff (Global)	0.500	Flow per Person per Day (l/per/day)	0.000
Foul Sewage per hectare (l/s)	0.000		

Number of Input Hydrographs	0	Number of Storage Structures	0
Number of Online Controls	0	Number of Time/Area Diagrams	0
Number of Offline Controls	0	Number of Real Time Controls	0

Synthetic Rainfall Details

Rainfall Model		FSR	Ratio R 0.360
Region	England and Wales	Cv (Summer)	0.750
M5-60 (mm)	18.000	Cv (Winter)	0.840

Margin for Flood Risk Warning (mm)	300.0
Analysis Timestep	2.5 Second Increment (Extended)
DTS Status	OFF
DVD Status	ON
Inertia Status	ON

Profile(s)	Summer and Winter
Duration(s) (mins)	60
Return Period(s) (years)	1, 2, 30, 100
Climate Change (%)	0, 0, 0, 0

PN	US/MH Name	Storm	Return Period	Climate Change	First (X) Surcharge	First (Y) Flood	First (Z) Overflow	Overflow Act.	Water Level (m)
1.000	1	60 Summer	1	+0%					43.563
1.001	2	60 Summer	1	+0%					43.353
1.002	3	60 Summer	1	+0%					43.227
2.000	4	60 Summer	1	+0%					43.300
2.001	5	60 Summer	1	+0%					43.288
2.002	6	60 Summer	1	+0%					43.177
1.003	4	60 Summer	1	+0%					43.095

PN	US/MH Name	Surcharged Depth (m)	Flooded Volume (m³)	Flow / Cap.	Overflow (l/s)	Half Drain Time (mins)	Pipe Flow (l/s)	Status	Level Exceeded
1.000	1	-0.097	0.000	0.27			5.2	OK	
1.001	2	-0.172	0.000	0.13			6.4	OK	
1.002	3	-0.169	0.000	0.14			7.7	OK	
2.000	4	-0.100	0.000	0.00			0.0	OK	
2.001	5	-0.100	0.000	0.00			0.0	OK	
2.002	6	-0.201	0.000	0.03			1.3	OK	

©1982-2020 Innovyze

1 year Return Period Summary of Critical Results by Maximum Outflow (Rank 1) for Storm

PN	US/MH Name	Surcharged Depth (m)	Flooded Volume (m³)	Flow / Cap.	Overflow (l/s)	Half Drain Time (mins)	Pipe Flow (l/s)	Status	Level Exceeded
1.003	4	-0.155	0.000	0.21			8.9	OK	

©1982-2020 Innovyze

2 year Return Period Summary of Critical Results by Maximum Outflow (Rank 1) for Storm

Simulation Criteria

Areal Reduction Factor	1.000	Additional Flow - % of Total Flow	0.000
Hot Start (mins)	0	MADD Factor * 10m³/ha Storage	2.000
Hot Start Level (mm)	0	Inlet Coeffiecient	0.800
Manhole Headloss Coeff (Global)	0.500	Flow per Person per Day (l/per/day)	0.000
Foul Sewage per hectare (l/s)	0.000		

Number of Input Hydrographs	0	Number of Storage Structures	0
Number of Online Controls	0	Number of Time/Area Diagrams	0
Number of Offline Controls	0	Number of Real Time Controls	0

Synthetic Rainfall Details

Rainfall Model		FSR	Ratio R 0.360
Region	England and Wales	Cv (Summer)	0.750
M5-60 (mm)	18.000	Cv (Winter)	0.840

Margin for Flood Risk Warning (mm)	300.0
Analysis Timestep	2.5 Second Increment (Extended)
DTS Status	OFF
DVD Status	ON
Inertia Status	ON

Profile(s)	Summer and Winter
Duration(s) (mins)	60
Return Period(s) (years)	1, 2, 30, 100
Climate Change (%)	0, 0, 0, 0

PN	US/MH Name	Storm	Return Period	Climate Change	First (X) Surcharge	First (Y) Flood	First (Z) Overflow	Overflow Act.	Water Level (m)
1.000	1	60 Summer	2	+0%					43.571
1.001	2	60 Summer	2	+0%					43.360
1.002	3	60 Summer	2	+0%					43.235
2.000	4	60 Summer	2	+0%					43.300
2.001	5	60 Summer	2	+0%					43.288
2.002	6	60 Summer	2	+0%					43.180
1.003	4	60 Summer	2	+0%					43.104

PN	US/MH Name	Surcharged Depth (m)	Flooded Volume (m³)	Flow / Cap.	Overflow (l/s)	Half Drain Time (mins)	Pipe Flow (l/s)	Status	Level Exceeded
1.000	1	-0.089	0.000	0.34			6.7	OK	
1.001	2	-0.165	0.000	0.16			8.2	OK	
1.002	3	-0.160	0.000	0.18			9.8	OK	
2.000	4	-0.100	0.000	0.00			0.0	OK	
2.001	5	-0.100	0.000	0.00			0.0	OK	
2.002	6	-0.198	0.000	0.03			1.6	OK	

©1982-2020 Innovyze

2 year Return Period Summary of Critical Results by Maximum Outflow (Rank 1) for Storm

PN	US/MH Name	Surcharged Depth (m)	Flooded Volume (m^3)	Flow / Cap.	Overflow (l/s)	Half Drain Time (mins)	Pipe Flow (l/s)	Status	Level Exceeded
1.003	4	-0.146	0.000	0.27			11.4	OK	

©1982-2020 Innovyze

30 year Return Period Summary of Critical Results by Maximum Outflow (Rank 1) for Storm

Simulation Criteria

Areal Reduction Factor	1.000	Additional Flow - % of Total Flow	0.000
Hot Start (mins)	0	MADD Factor * 10m³/ha Storage	2.000
Hot Start Level (mm)	0	Inlet Coeffiecient	0.800
Manhole Headloss Coeff (Global)	0.500	Flow per Person per Day (l/per/day)	0.000
Foul Sewage per hectare (l/s)	0.000		

Number of Input Hydrographs	0	Number of Storage Structures	0
Number of Online Controls	0	Number of Time/Area Diagrams	0
Number of Offline Controls	0	Number of Real Time Controls	0

Synthetic Rainfall Details

Rainfall Model		FSR	Ratio R 0.360
Region	England and Wales	Cv (Summer)	0.750
M5-60 (mm)	18.000	Cv (Winter)	0.840

Margin for Flood Risk Warning (mm)	300.0
Analysis Timestep	2.5 Second Increment (Extended)
DTS Status	OFF
DVD Status	ON
Inertia Status	ON

Profile(s)	Summer and Winter
Duration(s) (mins)	60
Return Period(s) (years)	1, 2, 30, 100
Climate Change (%)	0, 0, 0, 0

PN	US/MH Name	Storm	Return Period	Climate Change	First (X) Surcharge	First (Y) Flood	First (Z) Overflow	Overflow Act.	Water Level (m)
1.000	1	60 Summer	30	+0%					43.599
1.001	2	60 Summer	30	+0%					43.387
1.002	3	60 Summer	30	+0%					43.264
2.000	4	60 Summer	30	+0%					43.300
2.001	5	60 Summer	30	+0%					43.288
2.002	6	60 Summer	30	+0%					43.192
1.003	4	60 Summer	30	+0%					43.142

PN	US/MH Name	Surcharged Depth (m)	Flooded Volume (m³)	Flow / Cap.	Overflow (l/s)	Half Drain Time (mins)	Pipe Flow (l/s)	Status	Level Exceeded
1.000	1	-0.061	0.000	0.66			12.7	OK	
1.001	2	-0.138	0.000	0.31			15.9	OK	
1.002	3	-0.131	0.000	0.36			19.3	OK	
2.000	4	-0.100	0.000	0.00			0.0	OK	
2.001	5	-0.100	0.000	0.00			0.0	OK	
2.002	6	-0.186	0.000	0.07			3.4	OK	

©1982-2020 Innovyze

30 year Return Period Summary of Critical Results by Maximum Outflow (Rank 1) for Storm

PN	US/MH Name	Surcharged Depth (m)	Flooded Volume (m^3)	Flow / Cap.	Overflow (l/s)	Half Drain Time (mins)	Pipe Flow (l/s)	Status	Level Exceeded
1.003	4	-0.108	0.000	0.53			22.7	OK	

©1982-2020 Innovyze

100 year Return Period Summary of Critical Results by Maximum Outflow (Rank 1) for Storm

Simulation Criteria

Areal Reduction Factor	1.000	Additional Flow - % of Total Flow	0.000
Hot Start (mins)	0	MADD Factor * 10m³/ha Storage	2.000
Hot Start Level (mm)	0	Inlet Coeffiecient	0.800
Manhole Headloss Coeff (Global)	0.500	Flow per Person per Day (l/per/day)	0.000
Foul Sewage per hectare (l/s)	0.000		

Number of Input Hydrographs	0	Number of Storage Structures	0
Number of Online Controls	0	Number of Time/Area Diagrams	0
Number of Offline Controls	0	Number of Real Time Controls	0

Synthetic Rainfall Details

Rainfall Model		FSR	Ratio R 0.360
Region	England and Wales	Cv (Summer)	0.750
M5-60 (mm)	18.000	Cv (Winter)	0.840

Margin for Flood Risk Warning (mm)	300.0
Analysis Timestep	2.5 Second Increment (Extended)
DTS Status	OFF
DVD Status	ON
Inertia Status	ON

Profile(s)	Summer and Winter
Duration(s) (mins)	60
Return Period(s) (years)	1, 2, 30, 100
Climate Change (%)	0, 0, 0, 0

PN	US/MH Name	Storm	Return Period	Climate Change	First (X) Surcharge	First (Y) Flood	First (Z) Overflow	Overflow Act.	Water Level (m)
1.000	1	60 Summer	100	+0%					43.618
1.001	2	60 Summer	100	+0%					43.401
1.002	3	60 Summer	100	+0%					43.280
2.000	4	60 Summer	100	+0%					43.300
2.001	5	60 Summer	100	+0%					43.288
2.002	6	60 Summer	100	+0%					43.199
1.003	4	60 Summer	100	+0%					43.164

PN	US/MH Name	Surcharged Depth (m)	Flooded Volume (m³)	Flow / Cap.	Overflow (l/s)	Half Drain Time (mins)	Pipe Flow (l/s)	Status	Level Exceeded
1.000	1	-0.042	0.000	0.86			16.7	OK	
1.001	2	-0.124	0.000	0.41			20.9	OK	
1.002	3	-0.116	0.000	0.47			25.3	OK	
2.000	4	-0.100	0.000	0.00			0.0	OK	
2.001	5	-0.100	0.000	0.00			0.0	OK	
2.002	6	-0.179	0.000	0.09			4.5	OK	

©1982-2020 Innovyze

100 year Return Period Summary of Critical Results by Maximum Outflow (Rank 1) for Storm

PN	US/MH Name	Surcharged Depth (m)	Flooded Volume (m^3)	Flow / Cap.	Overflow (l/s)	Half Drain Time (mins)	Pipe Flow (l/s)	Status	Level Exceeded
1.003	4	-0.086	0.000	0.70			29.8	OK	

©1982-2020 Innovyze

APPENDIX J

SURFACE WATER DRAINAGE CALCULATIONS

Project:	Date: 12/05/2026		
	Designed by: JamesAlbert	Checked by:	Approved By:
Report Details: Type: Inflow Summary Storm Phase: Phase	Company Address:		

Inflow Label	Connected To	Flow (L/s)	Runoff Method	Area (ha)	Percentage Impervious (%)	Urban Creep (%)	Adjusted Percentage Impervious (%)	Area Analysed (ha)
LEVEL 7 A	LVL 07 BLUE ROOF		Time of Concentration	0.014	100	0	100	0.014
LEVEL 7 B	LVL 07 BLUE ROOF		Time of Concentration	0.024	100	0	100	0.024
LEVEL 7 C	LVL 07 BLUE ROOF		Time of Concentration	0.023	100	0	100	0.023
LEVEL R1	LVL R1 BLUE ROOF		Time of Concentration	0.024	100	0	100	0.024
ROOF 1	TANK - 33.5m2		Time of Concentration	0.017	100	0	100	0.017
ROOF 1 WASHDOWN	TANK - 33.5m2		Time of Concentration	0.011	100	0	100	0.011
ROOF 2	TANK - 33.5m2		Time of Concentration	0.007	100	0	100	0.007
ROOF 3	TANK - 33.5m2		Time of Concentration	0.006	100	0	100	0.006
ROOF 3 WASHDOWN	TANK - 33.5m2		Time of Concentration	0.010	100	0	100	0.010
ROOF 4	TANK - 18.0m2		Time of Concentration	0.001	100	0	100	0.001
TOTAL		**0.0**		**0.137**				**0.137**

Project:	Date: 12/05/2026		
	Designed by: JamesAlbert	Checked by:	Approved By:
Report Details: Type: Network Design Criteria Storm Phase: Phase	Company Address:		

Flow Options

Peak Flow Calculation	(UK) Modified Rational Method
Min. Time of Entry (mins)	5
Max. Travel Time (mins)	30

Pipe Options

Lock Slope Options	None
Design Options	Minimise Excavation
Design Level	Level Soffits
Min. Cover Depth (m)	1.200
Min. Slope (1:X)	500.00
Max. Slope (1:X)	40.00
Min. Velocity (m/s)	1.0
Max. Velocity (m/s)	3.0
Use Flow Restriction	☐
Reduce Channel Depths	☐

Pipe Size Library

Default

Add. Increment (mm)	75
Max. Diameter (mm)	0

Diameter (mm)	Min. Slope (1:X)	Max. Slope (1:X)
100	0.00	0.00
150	0.00	0.00

Project:	Date: 12/05/2026		
	Designed by: JamesAlbert	Checked by:	Approved By:
Report Details: Type: Network Design Criteria Storm Phase: Phase	Company Address:		

Manhole Options

Apply Offset	☐

Manhole Size Library

Default

Diameter / Width

Connection (mm)	Diameter / Length (m)	Width (m)
0	1.200	0.000
375	1.350	0.000
500	1.500	0.000
750	1.800	0.000

Additional Sizing

Connection (mm)	900
Diameter / Length (m)	0.900
Width (m)	0.000

Depth

Depth (m)	Diameter / Length (m)	Width (m)
0.000	1.050	0.000
1.500	1.200	0.000

Access

Depth (m)	Ladder Protrusion (mm)
0.000	130
3.000	230

Benching Requirements

Landing Width (mm)	500
Benching Width (mm)	225

Project:	Date: 12/05/2026		
	Designed by: JamesAlbert	Checked by:	Approved By:
Report Details: Type: Outfall Details Storm Phase: Phase	Company Address:		

Outfalls

Outfall	Outfall Type	Gated	Fixed Surcharged Level (m)	Level Curve
Manhole	Free Discharge	■		

Project:	Date: 12/05/2026		
	Designed by: JamesAlbert	Checked by:	Approved By:
Report Title: Rainfall Analysis Criteria	Company Address:		

Runoff Type	Dynamic
Output Interval (mins)	5
Time Step	Default
Urban Creep	Apply Global Value
Urban Creep Global Value (%)	0
Junction Flood Risk Margin (mm)	300
Perform No Discharge Analysis	☐

Project:	Date: 12/05/2026		
	Designed by: JamesAlbert	Checked by:	Approved By:
Report Details: Type: Inflows Summary Storm Phase: Phase	Company Address:		

FEH 50 Fountain Street: 2 years: Increase Rainfall (%): +0: Critical Storm Per Item: Rank By: Max. Inflow

Inflow	Storm Event	Inflow Area (ha)	Max. Inflow (L/s)	Total Inflow Volume (m^3)
LEVEL 7 A	FEH 50 Fountain Street: 2 years: +0 %: 15 mins: Summer	0.01	2.7	1.185
ROOF 3	FEH 50 Fountain Street: 2 years: +0 %: 15 mins: Summer	0.01	1.2	0.539
LEVEL R1	FEH 50 Fountain Street: 2 years: +0 %: 15 mins: Summer	0.02	4.7	2.029
LEVEL 7 C	FEH 50 Fountain Street: 2 years: +0 %: 15 mins: Summer	0.02	4.5	1.945
ROOF 1	FEH 50 Fountain Street: 2 years: +0 %: 15 mins: Summer	0.02	3.3	1.422
ROOF 2	FEH 50 Fountain Street: 2 years: +0 %: 15 mins: Summer	0.01	1.4	0.590
LEVEL 7 B	FEH 50 Fountain Street: 2 years: +0 %: 15 mins: Summer	0.02	4.7	2.050
ROOF 1 WASHDOWN	FEH 50 Fountain Street: 2 years: +0 %: 15 mins: Summer	0.01	2.1	0.931
ROOF 3 WASHDOWN	FEH 50 Fountain Street: 2 years: +0 %: 15 mins: Summer	0.01	1.9	0.844
ROOF 4	FEH 50 Fountain Street: 2 years: +0 %: 15 mins: Summer	0.00	0.2	0.084

Project:	Date: 12/05/2026		
	Designed by: JamesAlbert	Checked by:	Approved By:
Report Details: Type: Inflows Summary Storm Phase: Phase	Company Address:		

FEH 50 Fountain Street: 30 years: Increase Rainfall (%): +40: Critical Storm Per Item: Rank By: Max. Inflow

Inflow	Storm Event	Inflow Area (ha)	Max. Inflow (L/s)	Total Inflow Volume (m^3)
LEVEL 7 A	FEH 50 Fountain Street: 30 years: +40 %: 15 mins: Summer	0.01	8.3	3.614
ROOF 3	FEH 50 Fountain Street: 30 years: +40 %: 15 mins: Summer	0.01	3.8	1.638
LEVEL R1	FEH 50 Fountain Street: 30 years: +40 %: 15 mins: Summer	0.02	14.3	6.203
LEVEL 7 C	FEH 50 Fountain Street: 30 years: +40 %: 15 mins: Summer	0.02	13.7	5.939
ROOF 1	FEH 50 Fountain Street: 30 years: +40 %: 15 mins: Summer	0.02	10.0	4.346
ROOF 2	FEH 50 Fountain Street: 30 years: +40 %: 15 mins: Summer	0.01	4.2	1.812
LEVEL 7 B	FEH 50 Fountain Street: 30 years: +40 %: 15 mins: Summer	0.02	14.4	6.266
ROOF 1 WASHDOWN	FEH 50 Fountain Street: 30 years: +40 %: 15 mins: Summer	0.01	6.5	2.844
ROOF 3 WASHDOWN	FEH 50 Fountain Street: 30 years: +40 %: 15 mins: Summer	0.01	6.0	2.583
ROOF 4	FEH 50 Fountain Street: 30 years: +40 %: 15 mins: Summer	0.00	0.6	0.258

Project:	Date: 12/05/2026		
	Designed by: JamesAlbert	Checked by:	Approved By:
Report Details: Type: Inflows Summary Storm Phase: Phase	Company Address:		

FEH 50 Fountain Street: 100 years: Increase Rainfall (%): +45: Critical Storm Per Item: Rank By: Max. Inflow

Inflow	Storm Event	Inflow Area (ha)	Max. Inflow (L/s)	Total Inflow Volume (m^3)
LEVEL 7 A	FEH 50 Fountain Street: 100 years: +45 %: 15 mins: Summer	0.01	10.9	4.765
ROOF 3	FEH 50 Fountain Street: 100 years: +45 %: 15 mins: Summer	0.01	4.9	2.158
LEVEL R1	FEH 50 Fountain Street: 100 years: +45 %: 15 mins: Summer	0.02	18.7	8.167
LEVEL 7 C	FEH 50 Fountain Street: 100 years: +45 %: 15 mins: Summer	0.02	17.9	7.820
ROOF 1	FEH 50 Fountain Street: 100 years: +45 %: 15 mins: Summer	0.02	13.1	5.716
ROOF 2	FEH 50 Fountain Street: 100 years: +45 %: 15 mins: Summer	0.01	5.4	2.378
LEVEL 7 B	FEH 50 Fountain Street: 100 years: +45 %: 15 mins: Summer	0.02	18.9	8.248
ROOF 1 WASHDOWN	FEH 50 Fountain Street: 100 years: +45 %: 15 mins: Summer	0.01	8.6	3.745
ROOF 3 WASHDOWN	FEH 50 Fountain Street: 100 years: +45 %: 15 mins: Summer	0.01	7.8	3.401
ROOF 4	FEH 50 Fountain Street: 100 years: +45 %: 15 mins: Summer	0.00	0.8	0.338

Project:	Date: 12/05/2026		
	Designed by: JamesAlbert	Checked by:	Approved By:
Report Details: Type: Junctions Summary Storm Phase: Phase	Company Address:		

FEH 50 Fountain Street: 2 years: Increase Rainfall (%): +0: Critical Storm Per Item: Rank By: Max. Flooded Volume

Junction	Storm Event	Cover Level (m)	Invert Level (m)	Max. Level (m)	Max. Depth (m)	Max. Inflow (L/s)	Max. Resident Volume (m³)	Max. Flooded Volume (m³)	Max. Outflow (L/s)	Total Discharge Volume (m³)	Status
Manhole	FEH 50 Fountain Street: 2 years: +0 %: 15 mins: Summer	45.650	43.025	43.149	0.124	2.3	0.177	0.000	1.9	2.481	OK

Project:	Date: 12/05/2026		
	Designed by: JamesAlbert	Checked by:	Approved By:
Report Details: Type: Junctions Summary Storm Phase: Phase	Company Address:		

FEH 50 Fountain Street: 30 years: Increase Rainfall (%): +40: Critical Storm Per Item: Rank By: Max. Flooded Volume

Junction	Storm Event	Cover Level (m)	Invert Level (m)	Max. Level (m)	Max. Depth (m)	Max. Inflow (L/s)	Max. Resident Volume (m³)	Max. Flooded Volume (m³)	Max. Outflow (L/s)	Total Discharge Volume (m³)	Status
Manhole	FEH 50 Fountain Street: 30 years: +40 %: 15 mins: Summer	45.650	43.025	43.320	0.295	3.4	0.422	0.000	2.0	2.929	OK

Project:	Date: 12/05/2026		
	Designed by: JamesAlbert	Checked by:	Approved By:
Report Details: Type: Junctions Summary Storm Phase: Phase	Company Address:		

FEH 50 Fountain Street: 100 years: Increase Rainfall (%): +45: Critical Storm Per Item: Rank By: Max. Flooded Volume

Junction	Storm Event	Cover Level (m)	Invert Level (m)	Max. Level (m)	Max. Depth (m)	Max. Inflow (L/s)	Max. Resident Volume (m³)	Max. Flooded Volume (m³)	Max. Outflow (L/s)	Total Discharge Volume (m³)	Status
Manhole	FEH 50 Fountain Street: 100 years: +45 %: 15 mins: Summer	45.650	43.025	43.409	0.384	3.3	0.550	0.000	2.0	2.911	OK

Project:	Date: 12/05/2026		
	Designed by: JamesAlbert	Checked by:	Approved By:
Report Details: Type: Stormwater Controls Summary Storm Phase: Phase	Company Address:		

FEH 50 Fountain Street: 2 years: Increase Rainfall (%): +0: Critical Storm Per Item: Rank By: Max. Flooded Volume

Storm Event	Stormwater Control	Max. US Level (m)	Max. DS Level (m)	Max. US Depth (m)	Max. DS Depth (m)	Max. Inflow (L/s)	Max. Resident Volume (m³)	Max. Flooded Volume (m³)	Total Lost Volume (m³)	Max. Outflow (L/s)	Total Discharge Volume (m³)	Half Drain Down Time (mins)	Percentage Available (%)
FEH 50 Fountain Street: 2 years: +0 %: 15 mins: Summer	LVL R1 BLUE ROOF	53.011	53.011	0.011	0.011	4.7	1.982	0.000	0.000	0.1	0.089		89.134
FEH 50 Fountain Street: 2 years: +0 %: 15 mins: Summer	TANK - 33.5m2	43.149	43.149	0.074	0.074	10.0	2.337	0.000	0.000	2.3	3.470		90.849
FEH 50 Fountain Street: 2 years: +0 %: 15 mins: Summer	LVL 07 BLUE ROOF	50.011	50.011	0.011	0.011	11.9	5.107	0.000	0.000	0.1	0.132		89.439
FEH 50 Fountain Street: 2 years: +0 %: 15 mins: Summer	TANK - 18.0m2	43.141	43.141	0.046	0.046	2.5	0.833	0.000	0.000	0.6	0.407		94.255

Project:	Date: 12/05/2026		
	Designed by: JamesAlbert	Checked by:	Approved By:
Report Details: Type: Stormwater Controls Summary Storm Phase: Phase	Company Address:		

Status
OK
OK
OK
OK

Project:	Date: 12/05/2026		
	Designed by: JamesAlbert	Checked by:	Approved By:
Report Details: Type: Stormwater Controls Summary Storm Phase: Phase	Company Address:		

FEH 50 Fountain Street: 30 years: Increase Rainfall (%): +40: Critical Storm Per Item: Rank By: Max. Flooded Volume

Storm Event	Stormwater Control	Max. US Level (m)	Max. DS Level (m)	Max. US Depth (m)	Max. DS Depth (m)	Max. Inflow (L/s)	Max. Resident Volume (m³)	Max. Flooded Volume (m³)	Total Lost Volume (m³)	Max. Outflow (L/s)	Total Discharge Volume (m³)	Half Drain Down Time (mins)	Percentage Available (%)
FEH 50 Fountain Street: 30 years: +40 %: 15 mins: Summer	LVL R1 BLUE ROOF	53.033	53.033	0.033	0.033	14.3	5.999	0.000	0.000	0.3	0.409		67.118
FEH 50 Fountain Street: 30 years: +40 %: 15 mins: Summer	TANK - 33.5m2	43.320	43.320	0.245	0.245	30.8	7.709	0.000	0.000	3.4	7.075		69.811
FEH 50 Fountain Street: 30 years: +40 %: 15 mins: Summer	LVL 07 BLUE ROOF	50.032	50.032	0.032	0.032	36.5	15.502	0.000	0.000	0.5	0.636		67.946
FEH 50 Fountain Street: 30 years: +40 %: 15 mins: Summer	TANK - 18.0m2	43.320	43.320	0.225	0.225	18.1	4.059	0.000	0.000	0.5	0.245		72.019

Project:	Date: 12/05/2026		
	Designed by: JamesAlbert	Checked by:	Approved By:
Report Details: Type: Stormwater Controls Summary Storm Phase: Phase	Company Address:		

Status
OK
OK
OK
OK

Project:	Date: 12/05/2026		
	Designed by: JamesAlbert	Checked by:	Approved By:
Report Details: Type: Stormwater Controls Summary Storm Phase: Phase	Company Address:		

FEH 50 Fountain Street: 100 years: Increase Rainfall (%): +45: Critical Storm Per Item: Rank By: Max. Flooded Volume

Storm Event	Stormwater Control	Max. US Level (m)	Max. DS Level (m)	Max. US Depth (m)	Max. DS Depth (m)	Max. Inflow (L/s)	Max. Resident Volume (m³)	Max. Flooded Volume (m³)	Total Lost Volume (m³)	Max. Outflow (L/s)	Total Discharge Volume (m³)	Half Drain Down Time (mins)	Percentage Available (%)
FEH 50 Fountain Street: 100 years: +45 %: 15 mins: Summer	LVL R1 BLUE ROOF	53.044	53.044	0.044	0.044	18.7	7.940	0.000	0.000	0.4	0.513		56.480
FEH 50 Fountain Street: 100 years: +45 %: 15 mins: Summer	TANK - 33.5m2	43.407	43.407	0.332	0.332	40.4	10.422	0.000	0.000	3.3	8.751		59.186
FEH 50 Fountain Street: 100 years: +45 %: 15 mins: Summer	LVL 07 BLUE ROOF	50.042	50.042	0.042	0.042	47.7	20.511	0.000	0.000	0.7	0.805		57.587
FEH 50 Fountain Street: 100 years: +45 %: 15 mins: Summer	TANK - 18.0m2	43.407	43.407	0.312	0.312	19.2	5.615	0.000	0.000	0.6	0.186		61.289

Project:	Date: 12/05/2026		
	Designed by: JamesAlbert	Checked by:	Approved By:
Report Details: Type: Stormwater Controls Summary Storm Phase: Phase	Company Address:		

Status
OK
OK
OK
OK

Project:	Date: 12/05/2026		
	Designed by: JamesAlbert	Checked by:	Approved By:
Report Details: Type: Connections Summary Storm Phase: Phase	Company Address:		

FEH 50 Fountain Street: 2 years: Increase Rainfall (%): +0: Critical Storm Per Item: Rank By: Max. Flow

Connection	Storm Event	Connection Type	From	To	Upstream Cover Level (m)	Max. US Water Level (m)	Max. Flow Depth (m)	Discharge Volume (m³)	Max. Velocity (m/s)	Flow / Capacity	Max. Flow (L/s)	Status
Pipe (1)	FEH 50 Fountain Street: 2 years: +0 %: 15 mins: Summer	Pipe	TANK - 33.5m2	Manhole	43.950	43.149	0.099	2.644	0.4	0.04	2.3	OK
Pipe (3)	FEH 50 Fountain Street: 2 years: +0 %: 600 mins: Summer	Pipe	LVL R1 BLUE ROOF	TANK - 33.5m2	53.200	53.024	0.024	3.259	0.3	0	0.1	OK
Pipe (2)	FEH 50 Fountain Street: 2 years: +0 %: 600 mins: Summer	Pipe	LVL 07 BLUE ROOF	TANK - 33.5m2	50.200	50.026	0.024	4.898	0.4	0	0.2	OK
Pipe (4)	FEH 50 Fountain Street: 2 years: +0 %: 960 mins: Summer	Pipe	LVL 07 BLUE ROOF	TANK - 33.5m2	50.200	50.026	0.019	6.244	0.3	0	0.2	OK
Pipe (8)	FEH 50 Fountain Street: 2 years: +0 %: 720 mins: Summer	Pipe	LVL R1 BLUE ROOF	TANK - 33.5m2	53.200	53.024	0.022	3.538	0.3	0	0.1	OK
Pipe	FEH 50 Fountain Street: 2 years: +0 %: 600 mins: Summer	Pipe	LVL 07 BLUE ROOF	TANK - 33.5m2	50.200	50.026	0.024	4.899	0.4	0	0.2	OK
Pipe (5)	FEH 50 Fountain Street: 2 years: +0 %: 15 mins: Winter	Pipe	TANK - 18.0m2	TANK - 33.5m2	44.000	43.141	0.056	0.000	0.1	0.01	0.6	OK

Project:	Date: 12/05/2026		
	Designed by: JamesAlbert	Checked by:	Approved By:
Report Details: Type: Connections Summary Storm Phase: Phase	Company Address:		

FEH 50 Fountain Street: 30 years: Increase Rainfall (%): +40: Critical Storm Per Item: Rank By: Max. Flow

Connection	Storm Event	Connection Type	From	To	Upstream Cover Level (m)	Max. US Water Level (m)	Max. Flow Depth (m)	Discharge Volume (m³)	Max. Velocity (m/s)	Flow / Capacity	Max. Flow (L/s)	Status
Pipe (1)	FEH 50 Fountain Street: 30 years: +40 %: 960 mins: Summer	Pipe	TANK - 33.5m2	Manhole	43.950	43.464	0.225	114.616	0.2	0.12	7.2	Surcharged
Pipe (3)	FEH 50 Fountain Street: 30 years: +40 %: 480 mins: Summer	Pipe	LVL R1 BLUE ROOF	TANK - 33.5m2	53.200	53.061	0.100	7.768	0.1	0	0.3	OK
Pipe (2)	FEH 50 Fountain Street: 30 years: +40 %: 960 mins: Summer	Pipe	LVL 07 BLUE ROOF	TANK - 33.5m2	50.200	50.067	0.100	16.539	0.4	0	0.3	OK
Pipe (4)	FEH 50 Fountain Street: 30 years: +40 %: 960 mins: Summer	Pipe	LVL 07 BLUE ROOF	TANK - 33.5m2	50.200	50.067	0.100	16.492	0.4	0.01	0.3	OK
Pipe (8)	FEH 50 Fountain Street: 30 years: +40 %: 480 mins: Summer	Pipe	LVL R1 BLUE ROOF	TANK - 33.5m2	53.200	53.061	0.100	7.765	0.1	0	0.3	OK
Pipe	FEH 50 Fountain Street: 30 years: +40 %: 960 mins: Summer	Pipe	LVL 07 BLUE ROOF	TANK - 33.5m2	50.200	50.067	0.100	16.539	0.4	0.01	0.3	OK
Pipe (5)	FEH 50 Fountain Street: 30 years: +40 %: 600 mins: Summer	Pipe	TANK - 18.0m2	TANK - 33.5m2	44.000	43.570	0.225	3.613	0.2	0.05	2.3	Surcharged

Project:	Date: 12/05/2026		
	Designed by: JamesAlbert	Checked by:	Approved By:
Report Details: Type: Connections Summary Storm Phase: Phase	Company Address:		

FEH 50 Fountain Street: 100 years: Increase Rainfall (%): +45: Critical Storm Per Item: Rank By: Max. Flow

Connection	Storm Event	Connection Type	From	To	Upstream Cover Level (m)	Max. US Water Level (m)	Max. Flow Depth (m)	Discharge Volume (m³)	Max. Velocity (m/s)	Flow / Capacity	Max. Flow (L/s)	Status
Pipe (1)	FEH 50 Fountain Street: 100 years: +45 %: 480 mins: Winter	Pipe	TANK - 33.5m2	Manhole	43.950	43.761	0.225	93.165	0.3	0.1	6.1	Surcharged
Pipe (3)	FEH 50 Fountain Street: 100 years: +45 %: 600 mins: Summer	Pipe	LVL R1 BLUE ROOF	TANK - 33.5m2	53.200	53.081	0.100	11.352	0.1	0	0.3	OK
Pipe (2)	FEH 50 Fountain Street: 100 years: +45 %: 960 mins: Summer	Pipe	LVL 07 BLUE ROOF	TANK - 33.5m2	50.200	50.091	0.100	22.060	0.4	0.01	0.4	OK
Pipe (4)	FEH 50 Fountain Street: 100 years: +45 %: 960 mins: Summer	Pipe	LVL 07 BLUE ROOF	TANK - 33.5m2	50.200	50.091	0.100	22.022	0.3	0.01	0.4	OK
Pipe (8)	FEH 50 Fountain Street: 100 years: +45 %: 600 mins: Summer	Pipe	LVL R1 BLUE ROOF	TANK - 33.5m2	53.200	53.081	0.100	11.348	0.1	0	0.3	OK
Pipe	FEH 50 Fountain Street: 100 years: +45 %: 960 mins: Summer	Pipe	LVL 07 BLUE ROOF	TANK - 33.5m2	50.200	50.091	0.100	22.060	0.4	0.01	0.4	OK
Pipe (5)	FEH 50 Fountain Street: 100 years: +45 %: 2880 mins: Summer	Pipe	TANK - 18.0m2	TANK - 33.5m2	44.000	43.692	0.225	4.626	0.1	0.05	2.3	Surcharged

APPENDIX K

UNITED UTILITIES CORRESPONDENCE

WASTEWATER PRE-DEVELOPMENT ENQUIRY

United Utilities
Water for the North West

United Utilities Grasmere House, 2nd Floor
Lingley Mere Business Park
Great Sankey
Warrington
WA5 3LP

01.06.26

Dear James,

Pre-Development Enquiry for 50 Fountain Street, Manchester, UU Reference Number: 09464997

We have assessed your application based on the information provided. This pre-development advice on your drainage strategy will be valid for 12 months. Your strategy will need review by other authorities as part of the planning process. We advise conducting necessary site investigations to confirm viability of your proposals.

Modelled Flood Risk

Please see the image on **page 3** for details

I can confirm that we do not have modelled flood risk within the vicinity of the proposed development.

Please note that our modelling data is indicative, and only representative of the 1:100year storm event.

Please see **comment 2** of the attached guidance sheet

Asset Protection

1. We have reviewed our records and can confirm that there does not appear to be any charted public sewers located within the boundary of the proposed development.

Please see **comment 3** of the attached guidance sheet and **Working Near Our Pipelines Guidance document**

Foul Water

Foul flow from this site will be allowed to drain into the public combined sewer system.

Our preferred point of discharge would be to the West of your proposed development at an unrestricted rate.

Grid reference 384054, 398225

Please see the images on **page 3** for clarification

WASTEWATER PRE-DEVELOPMENT ENQUIRY

United Utilities
Water for the North West

Surface Water

Follow the National Planning Policy Guidance drainage hierarchy and Provide evidence for discounting higher options before considering public sewer discharge. Consult the Lead Local Flood Authority regarding surface water concerns.

Please see comment **4** within the guidance sheet

Public Sewer

United Utilities will consider a connection to the 375mm diameter public combined sewer within Concert Lane located West of the proposed site at a pass forward flow to be agreed by the Lead Local Flood Authority. United Utilities requests that any agreed rate does not exceed 2.0 l/s.

Grid reference 384054, 398225

Please see images on **page 3** for clarification

Site Images

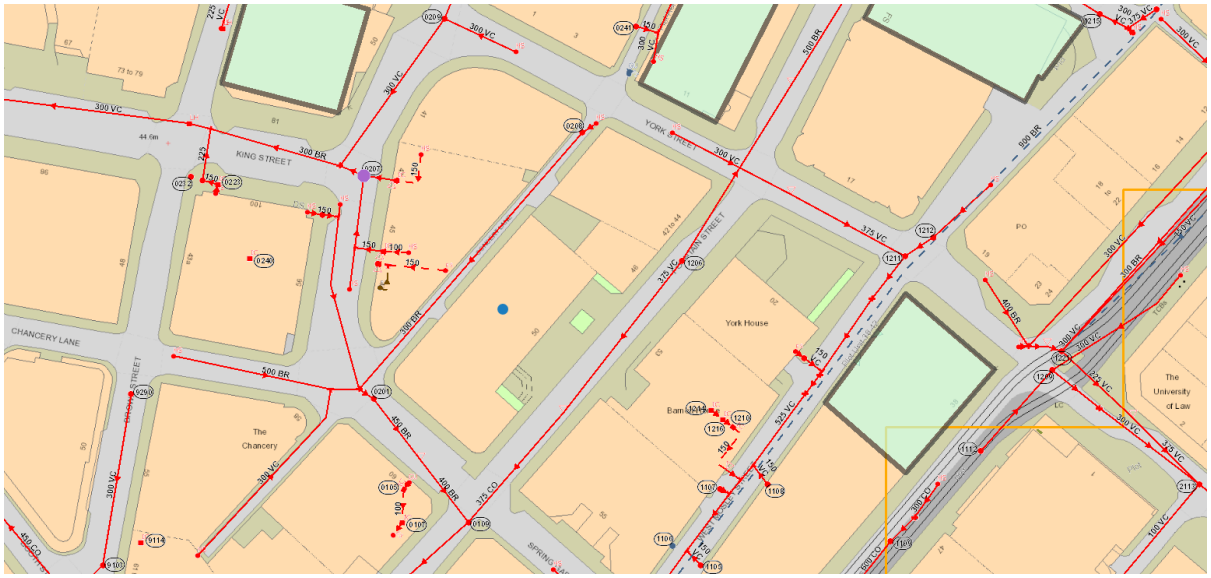

WASTEWATER PRE-DEVELOPMENT ENQUIRY

