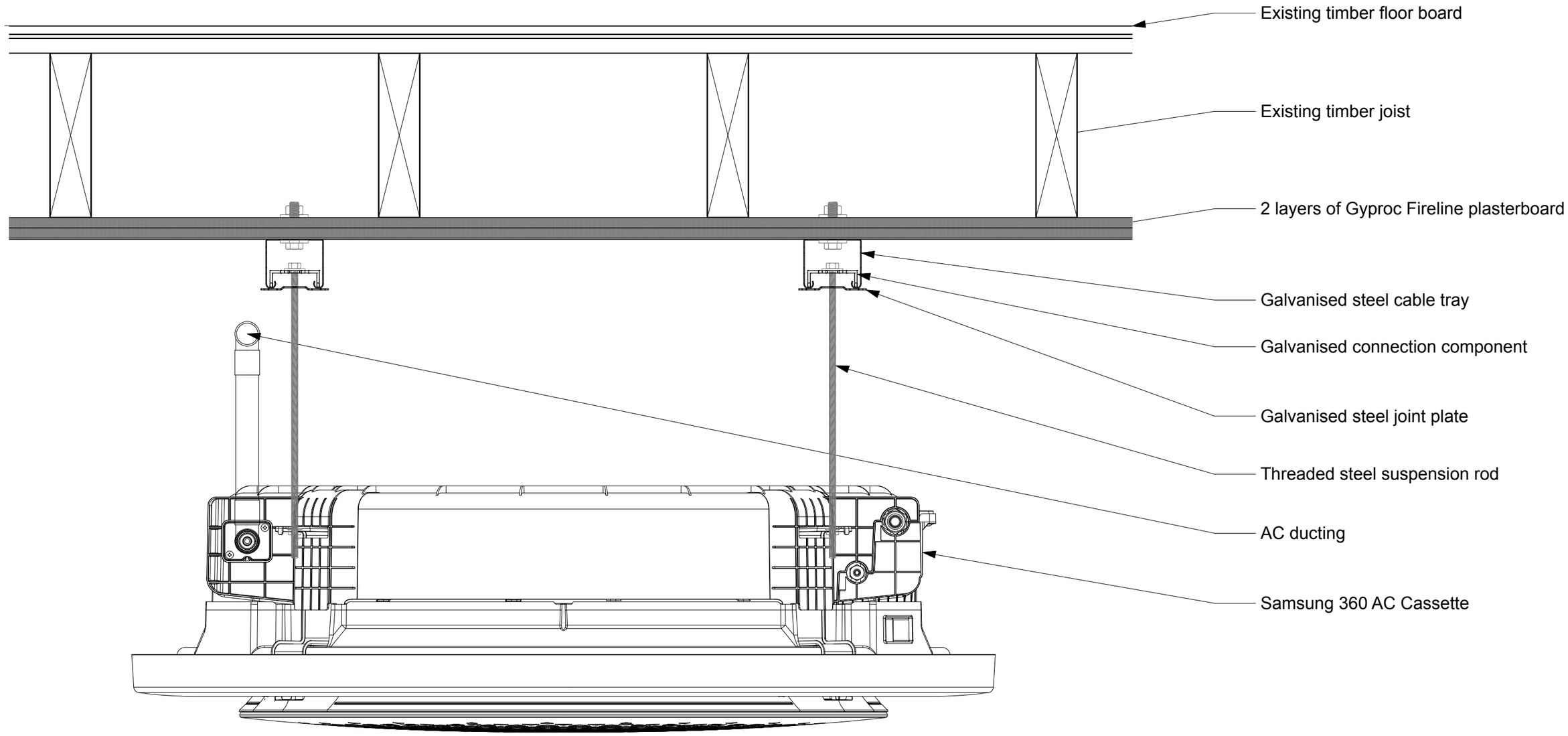

architecture:m

Moravian College,
14 Fairfield Square,
Manchester, M43 6AD.
+44 [0]161 370 6166
mail@architecturem.co.uk
www.architecturem.co.uk

Revision Notes

Project Title
Debenhams Beauty

Drawing Title
AC Fixing Details

Date	Drawn By	Scale @ A3	Job Number	Status	Drawing Number	Revision
20.01.26	MDW	1:5	580	P	413	/

Design and drawings are copyright of Architecture.m. Written permision must be sought before duplication. Any discrepancy found between information given on this drawing and that given on elsewhere recorded on site shall be notified immediatiely to the architect in writing | Do not scale from this drawing or derive dimensions from digital media | All dimensions are to be checked prior to works commencing on site | Design and drawings are copyright of Architecture.m | Written permision must be sought before duplication | Any discrepancy found between information given on this drawing and that given on elsewhere recorded on site shall be notified immediatiely to the architect in writing. Do not scale from this drawing or derive dimensions from digital media. All dimensions are to be checked prior to works commencing on site.