Elevation

Scale @ 1 : 50

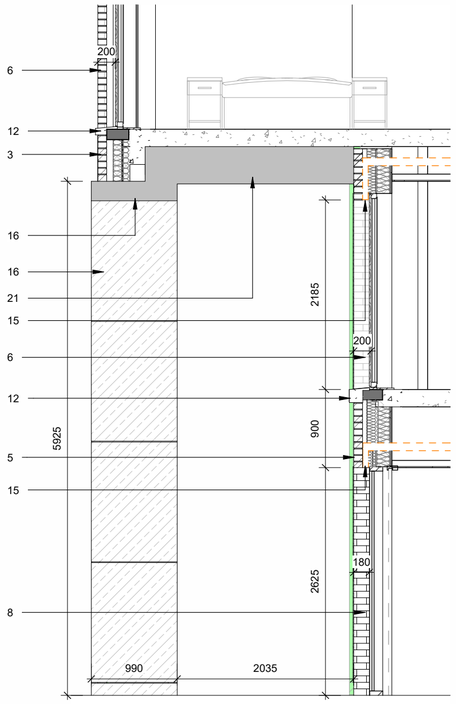

Section 01

Scale @ 1 : 50

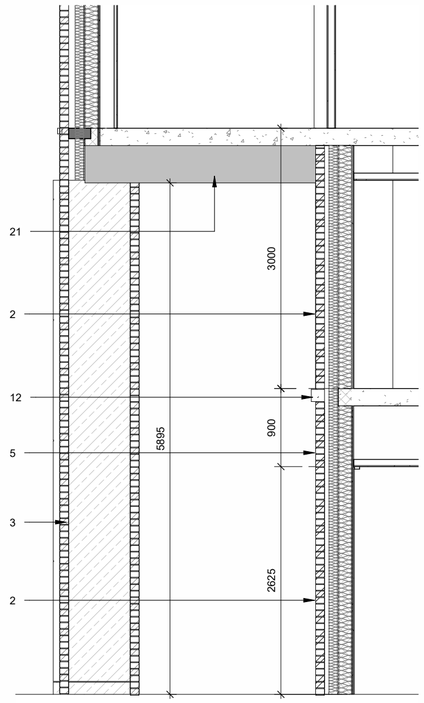

Section 02

Scale @ 1 : 50

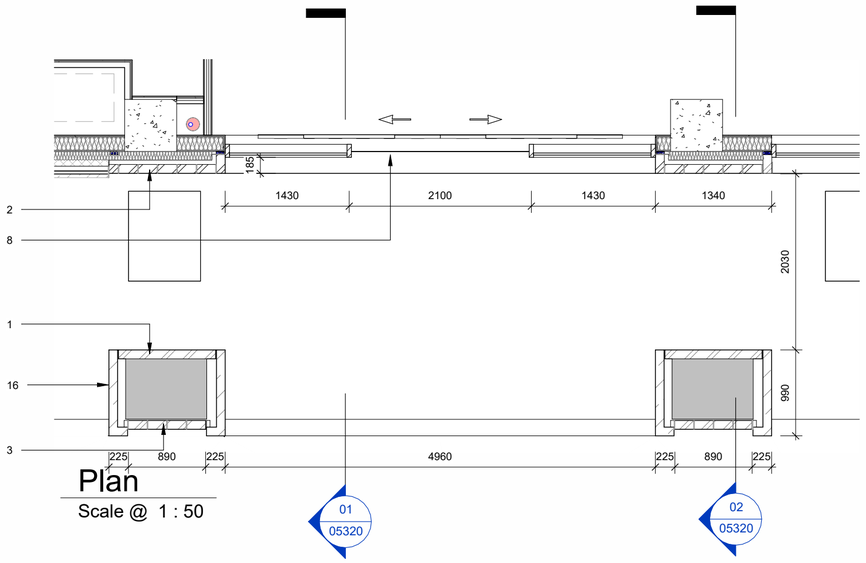

Plan

Scale @ 1 : 50

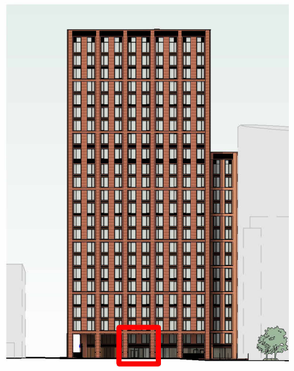

West Elevation Key

Scale @ 1 : 1000

0 1 2 3m

Scale @ 1:50

NOTES

- All dimensions and levels are to be checked on site.
- Any discrepancies are to be reported to the architect before any work commences.
- Whilst information on this sheet is issued to scale, scaling directly from this drawing may result in inaccuracies. For precise measurements, refer to the stated dimensions or contact the Architect.
- This drawing shall not be reproduced without express written permission from AEW.
- Title overlay drawings and ownership boundaries are produced using all reasonable endeavors. AEW cannot be responsible for the accuracy or scale discrepancy of base plans supplied to them.
- All works are to be undertaken in accordance with Building Regulations and the latest British Standards.
- All proprietary materials and products are to be used strictly in accordance with the manufacturers recommendations.

This drawing contains the following model files: -

NO1LOR-AEW-B1-ZZ-M3-A-00100
NO1LOR-CIV-XX-XX-M3-S-00001

Materials Key

1. Stretcher Bond Brick A - Dark Red Brick with light grey mortar
2. Stretcher Bond Brick B - Light Red Brick with light grey mortar
3. Stretcher Bond Brick A with 25mm projection - Dark Red Brick with light grey mortar
4. Stretcher Bond Brick B with 25mm projection - Light Red Brick with light grey mortar
5. Feature sawtooth panel between windows. Brick to be alternate type to main elevation
6. Recessed PPC aluminium slim framed fixed window panel. Colour to be bronze to match fretwork
7. Recessed fixed anodised aluminium fretwork panel with openable glazed panel behind. Colour to be bronze to match window frames
8. PPC Aluminium curtain wall system. Colour to be bronze to match window frame.
9. External Metal Doors in bronze colour to match window frame
10. PPC perforated plant screen panels to match window fretwork. Louvres mounted to rear
11. 1500mm high PPC Aluminium Balustrades in bronze colour to match window frame
12. Wetcast window cill, colour to match brick tone
13. Wetcast coping, colour to match brick tone
14. PPC aluminium parapet capping in colour match to facing brick
15. Aluminium vent, colour to match window frame colour
16. GRC 'goalpost' to colonnade, colour to match brick tone
17. Private townhouse steps (Stretcher Bond Brick A)
18. 1100mm high PPC Aluminium Balustrades in bronze colour to match window frame
19. Sawtooth brick detail, in Brick A
20. Sawtooth brick detail, in Brick B
21. PPC Aluminium soffit, in bronze colour to match windows
22. Glass effect rainscreen cladding panel above parapet windows
23. PPC perforated / louvred doors to match window fretwork. Ironmongery to be contrasting where required to meet requirement of Building Regulations. To be colour matched where Plant / Maintenance
24. Anodised etched rainscreen cladding panels to match window fretwork with integrated louvre panels where required
25. PPC Aluminum canopy over building entrance in bronze colour to match curtain walling

Rev	Date	Description	Drawn by	Checked By
P04	30/04/26	Revised and issued for planning - reveal depths updated	RP	BS
P03	05/03/26	Dimensions and labels added to section, elevations and plans	RC	BS
P02	30/01/26	Updated elevations to latest scheme design. Key updated to proposed materials	BS	PBH
P01	14/11/25	Draft Planning Issue	KS	PBH

Status: S2 — Purpose of Issue: For Planning

drawing stage: **Stage 4**

client: **Linear Living Ltd**

project: **Manchester, Lord Street**

drawing title: **Proposed Bay Study - Entrance / Colonnade**

date: 18/08/25 — drawn: KS

scale @ A2: As indicated — checked: BS

Rev **P04**

Dwg No **NO1LOR-AEW-XX-ZZ-DR-A-05320**

aew architects
0161 214 4370
www.aewarchitects.com

AEW Internal Ref Number: 14374