LEVEL MONITORING

for Subsidence Management Services

3 Winster Avenue, MANCHESTER, M20 2YG

Client:	Subsidence Management Services
Client Contact:	John Morrison
Claim Number:	500392020
Client Reference:	IFS-LBG-SUB-22-0102241
Policy Holder:	Mr Kevin Stout
Report Date:	10 February 2023
Our Ref:	M19269

SubsNetUK

Level Monitoring Readings

The following table shows the reading levels of the various Level Monitoring Station points.

Date	1	2	3	4	5	6	7	8
15/09/2022	10.3967	10.6514	10.4337	10.6034	10.3812	10.3724	10.3672	10.3793
29/11/2022	10.3963	10.6519	10.4337	10.6036	10.3804	10.3724	10.3675	10.3790
08/02/2023	10.3961	10.6522	10.4326	10.6016	10.3798	10.3715	10.3663	10.3782

Level Monitoring Difference Graphs

The following graphs display the progressive movement that each Level Monitoring Station recorded at each separate site visit date to give an overall look at how much the property is moving.

SubsNetUK

SubsNetUK

Level Monitoring Displacement Map

The following image shows an isometric representation of the movement of the property, based on the Level Monitoring Stations that were installed.

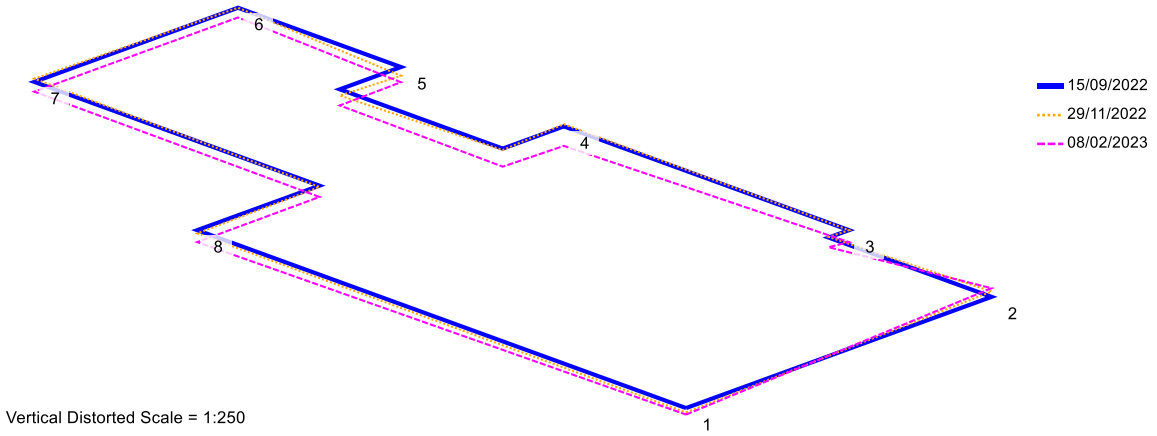

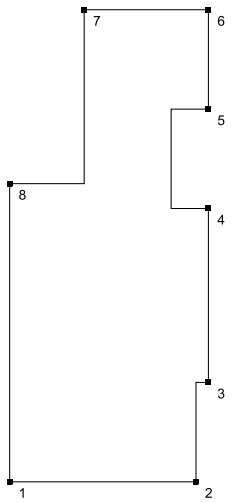

FRONT

Site Visit Notes

TBM located in drain at front of property. No secondary TBM located. If this is not suitable please advise if a deep datum is required. Relative Survey.

SubsNetUK