DO NOT SCALE : IF IN DOUBT ASK

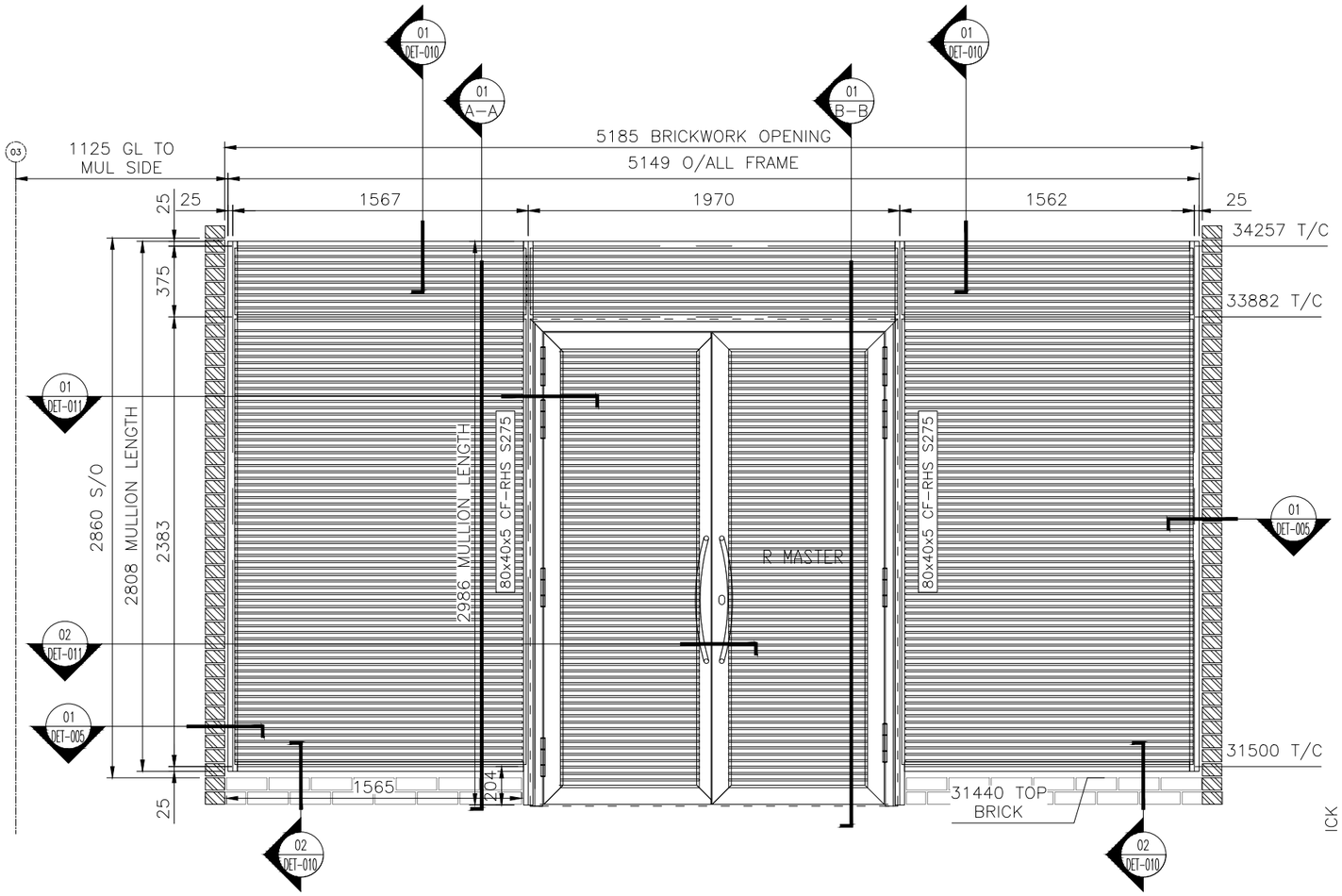

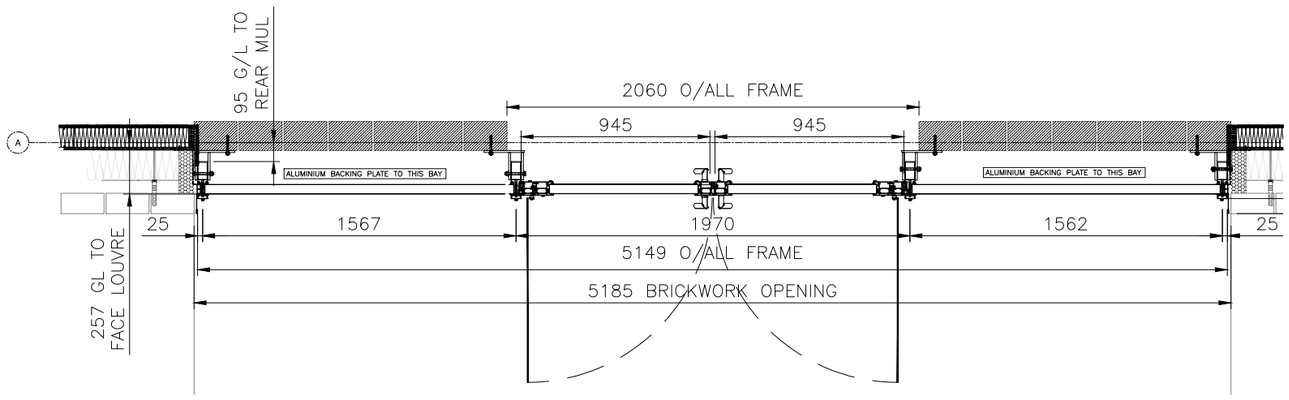

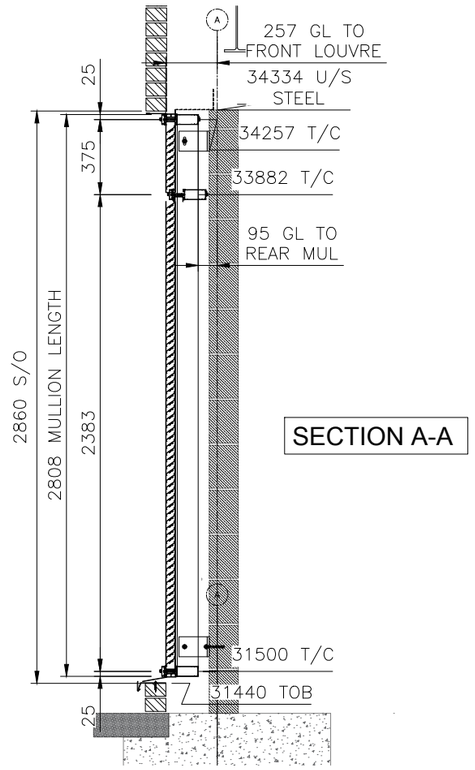

SECTION A-A

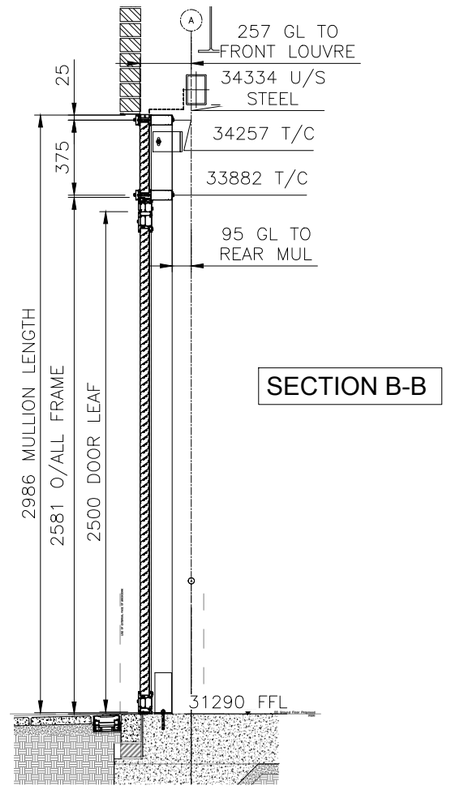

SECTION B-B

NOTES

REYNAERS CW50 CW AND CS77 WINDOWS AND DOORS

HARDWARE AND SYSTEM TO BE PAS24 CERTIFIED

COLOUR EXT – ELOXAL 33 MEDIUM BRONZE (SD201C8210521)
INT – RAL 9010

GLASS
EXTERNAL(G1) – 8.8MM CLEAR FLOAT PVB LAM CLIMAGUARD 1.0+ T (S2) (4MM/0.76 PVB CLEAR/4MM)
CAVITY 1 – 16mm BLACK WES 90% ARGON FILL
MID (G2) – 4mm GUARDIAN EXTRACLEAR CLIMAGUARD 1.0+ T (S4)
CAVITY 2 – 16MM BLACK WES 90% ARGON FILL
INTERNAL(G3) – 6mm GUARDIAN EXTRACLEAR TGH

PANEL
EXTERNAL – 2MM ALUMINIUM PPC ELOXAL BRONZE
CORE – 44MM MINERAL WOOL CORE C/W RIDGID SURROUND (NON COMBUSTABLE)
INTERNAL – 2MM ALUMINIUM PPC RAL9010

LOUVRE PANELS
C/W 1.5MM (MILL FINISH) ALUMINIUM BLANKING PLATE TO BLOCKWORK AREAS. INSECT MESH TO REMAINING AREAS

NOTES

REYNAERS CW50 CW AND CS77 WINDOWS AND DOOF
HARDWARE AND SYSTEM TO BE PAS24 CERTIFIED

COLOUR EXT – ELOXAL 33 MEDIUM BRONZE (SD201C8210521)
INT – RAL 9010

IRONMONGERY:
STAINLESS STEEL BUTT HINGES
EURO PROFILE DEAD LOCK AND KEY/THUMB TURN
STAINLESS STEEL TUBULAR HANDLE
SHOOT BOLTS TO SLAVE LEAF (DOUBLE ONLY)

ECW–012
TYPE L1
ED–00–004

Revision	Description	Drawn	Date
C01	CONSTRUCTION ISSUE	SA	01.07.25
P04	NEW SCHEDULE DESIGNS	SA	30.06.25
P03	AMENDED TO COMMENTS	SA	02.06.25
P02	AMENDED TO COMMENTS	SA	24.04.25
P01	FIRST ISSUE	SA	28.12.24

Client:

CORE FACADE

Project:
DIDSBURY POINT

Drawing Status:
CONSTRUCTION

Title: CW TYPE L1 ECW-012

Drawn:	Date:	Checked:	Date:
SA	28.12.24	SK	24.12.24

Scale: NTS @ A3
Project Number: 8845

Drawing Number: 8845-DID-ELE-012
Revision: C01