accoya®

ACCOYA®

Specification Guide V1.0

CONTENTS

1	Introduction	2
2	Cladding & Facades	3
3	Decking	17
4	Windows & Doors	25
5	Canal Lining	30
6	Fences	32
7	Structural	35
8	Specifications	39
9	Case Studies	43
10	Contact	46

1 INTRODUCTION

A new way of thinking about wood

One of the first steps in any building specification process is choosing the right materials to use – for service life, purpose and aesthetics.

In wood, you have a natural resource renowned for its sustainability, immense strength and ability to be machined into countless shapes, sizes and configurations. However, for many species, wood is often seen as lacking the consistency and durability required from building materials.

Accoya® sustainable wood is the timber industry benchmark for performance and sustainability. No other timber can offer this combination of stability, durability and versatility. This modified wood is sustainably sourced with FSC® certification and it has minimal environmental impact throughout its entire life; from production, through its use, right the way to the end of its life.

This guide has been designed to help architects and specifiers with the selection and specification of Accoya cladding, louvres, shutters, windows, doors, canal lining and decking. Its use will ensure every Accoya application meets or exceeds industrial performance standards, requires minimal maintenance and offers a level of durability which is compatible with typical building design life expectations.

Please refer to the Accoya Wood Information Guide and the Accoya Lumber Grading specifications for supplementary information to support specification.

CONTENTS

1	Introduction	2
2	Cladding & Facades	3
	Ventilated Cladding	5
	Horizontal Cladding	7
	Vertical Cladding	8
	Fire performance	10
	Shutters, Louvres & Fins	11
	Finishing Options for Facades	14
3	Decking	17
4	Windows & Doors	25
5	Canal Lining	30
6	Fences	32
7	Structural	35
8	Specifications	39
9	Case Studies	43
10	Contact	46

CLADDING & FACADES

Standing up to the elements, budgets and building regulations

When specifying building materials for cladding, it is important to consider a number of factors. These generally include functional and structural requirements, maintenance, sustainability, climate and immediate surroundings, timber grade and surface treatments.

The right choice of materials can transform a building project, not only aesthetically but also with regards to energy efficiency, weatherability and longevity.

CONTENTS

1	Introduction	2
2	Cladding & Facades	3
	Ventilated Cladding	5
	Horizontal Cladding	7
	Vertical Cladding	8
	Fire performance	10
	Shutters, Louvres & Fins	11
	Finishing Options for Facades	14
3	Decking	17
4	Windows & Doors	25
5	Canal Lining	30
6	Fences	32
7	Structural	35
8	Specifications	39
9	Case Studies	43
10	Contact	46

Cladding

Accoya wood is the ultimate substrate for cladding – offering low maintenance requirements, industry-leading environmental and sustainability credentials, and the performance characteristics of the most durable tropical hardwoods.

It can be machine profiled to exacting design and specification requirements Accoya cladding can be left to weather naturally but is also a very stable substrate for coatings, resulting in significantly less maintenance than is the case for other timbers. Exceptional stability means that tolerances remain tight and distortion is insignificant, even with wide boards giving architects and specifiers the ultimate in design flexibility.

PERFORMANCE

50 YEAR WARRANTY

HIGHLY STABLE

VERY LOW MAINTENANCE

FINISH

WIDE BOARDS AVAILABLE

IDEAL FOR COATING

FOR ALL CLIMATES

SUSTAINABILITY

SUSTAINABLY SOURCED

NON TOXIC

100% RECYCLABLE

CONTENTS

1	Introduction	2
2	Cladding & Facades	3
	Ventilated Cladding	5
	Horizontal Cladding	7
	Vertical Cladding	8
	Fire performance	10
	Shutters, Louvres & Fins	11
	Finishing Options for Facades	14
3	Decking	17
4	Windows & Doors	25
5	Canal Lining	30
6	Fences	32
7	Structural	35
8	Specifications	39
9	Case Studies	43
10	Contact	46

Ventilated cladding

A ventilated façade system is characterised by continuous vertical ventilation behind the cladding boards which ensures rain water and condensation behind the cladding will be removed and that the insulation retains its effectiveness.

- The ventilated cavity should have a depth of at least 15mm
- Ensure a continuous ventilation by allowing for sufficient ventilation inlets and outlets at top and bottom (at least 2000mm^2 per m horizontal length when using a ventilated profile or 5mm for a continuous gap)
- Insert suitable vermin mesh in ventilation openings when necessary (e.g. when opening width > 10mm)
- Do not fit boards flush to masonry or brickwork or install Accoya cladding in direct contact with concrete, stucco or masonry
- It is recommended to position the cladding above the splash zone, between ground level and a height of 200 to 250mm. This will avoid rain water splashing onto the boards, which can cause staining and reduce the service life of coatings. Applying a gravel section below the cladding is recommended.
- When coated, for best results round off the edges of the Accoya siding with a radius of at least 3mm.

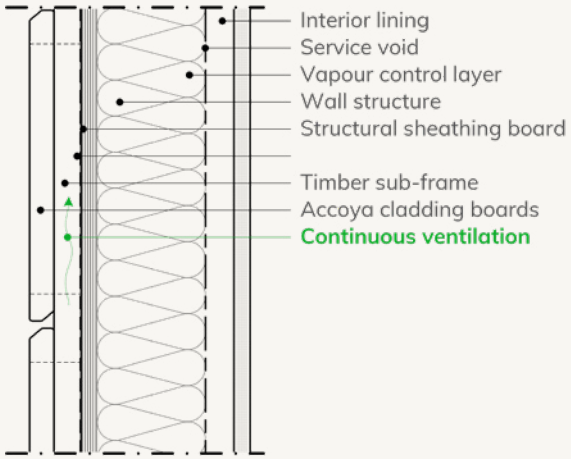

Image 1: ventilated cladding system principle.

CONTENTS

1	Introduction	2
2	Cladding & Facades	3
	Ventilated Cladding	5
	Horizontal Cladding	7
	Vertical Cladding	8
	Fire performance	10
	Shutters, Louvres & Fins	11
	Finishing Options for Facades	14
3	Decking	17
4	Windows & Doors	25
5	Canal Lining	30
6	Fences	32
7	Structural	35
8	Specifications	39
9	Case Studies	43
10	Contact	46

2 CLADDING

Joints

- Accoya cladding boards need to be installed with a mutual distance of at least 1mm
- When meeting other construction elements and/ or between the length of two boards, a free space of 5-10mm should be allowed for
- When joints are left open:
  - Any breather membrane should be UV-resistant
  - Protect timber battens with a suitable weather resistant joint tape
  - Vermin mesh might be required at certain widths
- Consider increasing the speed of installing Accoya cladding boards by milling a crusher bead into shiplap or tongue and groove profile.

Sub-frame

- The batten spacing should not exceed 600mm
- Minimum dimensions 38 x 19mm when fully supported by a substrate; if not, use battens of at least 50 x 25mm
- Use material of at least durability class 1 or 2
- In case of a risk of leaching (e.g. preservative treated wood), apply a (non-corrosive) barrier between the sub-frame battens and the Accoya boards
- Timber support battens should not be used above 18m building height.

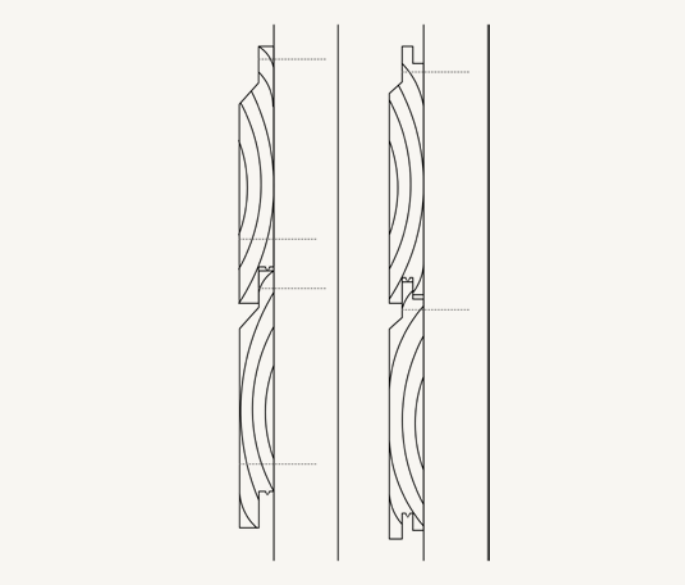

Image 2: Crusher bead.

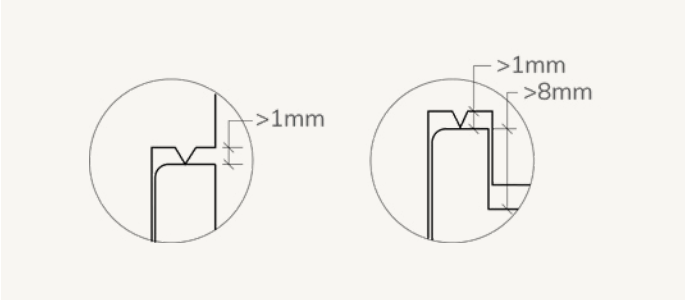

Image 3: Crusher bead (detail).

CONTENTS

1	Introduction	2
2	Cladding & Facades	3
	Ventilated Cladding	5
	Horizontal Cladding	7
	Vertical Cladding	8
	Fire performance	10
	Shutters, Louvres & Fins	11
	Finishing Options for Facades	14
3	Decking	17
4	Windows & Doors	25
5	Canal Lining	30
6	Fences	32
7	Structural	35
8	Specifications	39
9	Case Studies	43
10	Contact	46

Horizontal cladding

Always install the sub-frame vertically to ensure continuous ventilation.

Calculate the required boards by adding the joint width to/subtracting the overlap from the nominal board width, then divide 1000 by this number to get the square meter to linear meter coefficient.

Make sure to include some cutting loss in the numbers to be ordered.

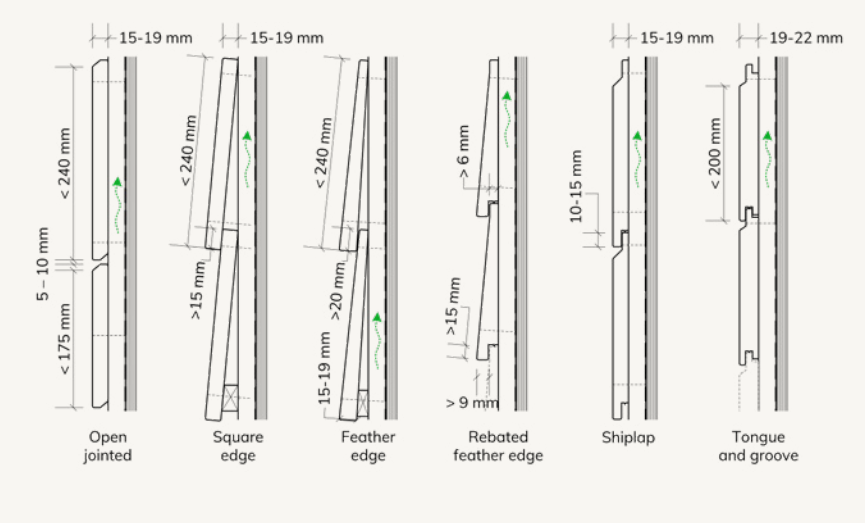

Image 4: Profiles and dimensions for horizontal cladding.

American School of The Hague, Netherlands
(Image shows Accoya with an uncoated finish)

CONTENTS

1	Introduction	2
2	Cladding & Facades	3
	Ventilated Cladding	5
	Horizontal Cladding	7
	Vertical Cladding	8
	Fire performance	10
	Shutters, Louvres & Fins	11
	Finishing Options for Facades	14
3	Decking	17
4	Windows & Doors	25
5	Canal Lining	30
6	Fences	32
7	Structural	35
8	Specifications	39
9	Case Studies	43
10	Contact	46

Vertical cladding

Use a double sub-frame where horizontal support battens are fixed to vertical counter battens. Water penetration at the end grain of the vertical battens should be avoided by applying a suitable sealer.

The horizontal battens in this double sub-frame should be chamfered at the top side, shedding water into the cavity (away from the cladding boards). However, the bottom batten should slant inward at the bottom, creating a drip lip at the intersection with the counter battens.

If a single sub-frame is chosen, using only horizontal support battens, additional ventilation measures need to be taken, by e.g. making cut-outs in the battens or interrupting the battens at regular intervals, staggered relative to each other. These horizontal battens must be chamfered on the top edge to shed any water outwards (away from the cavity).

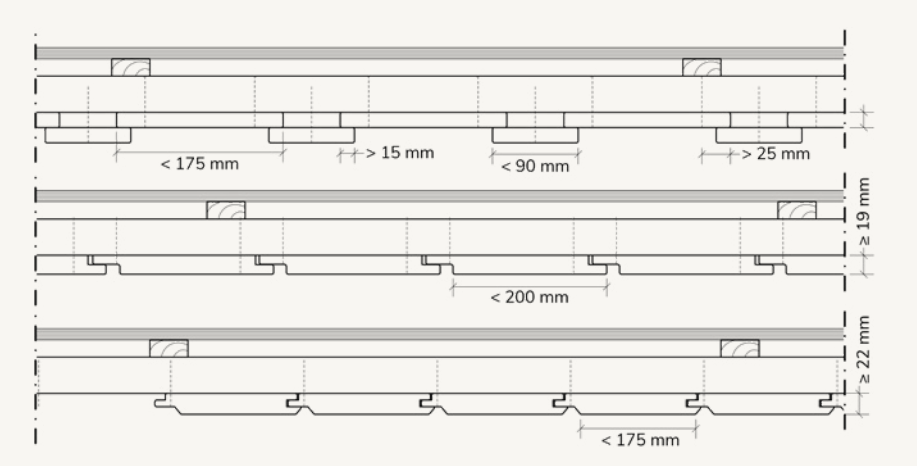

Image 5: Profiles and dimensions for vertical cladding.

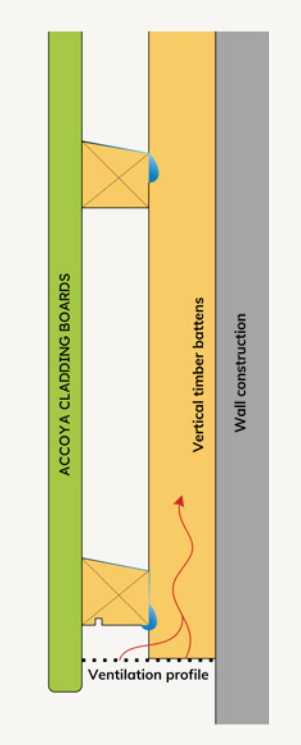

Image 6: Double subframe drip lip.

CONTENTS

1	Introduction	2
2	Cladding & Facades	3
	Ventilated Cladding	5
	Horizontal Cladding	7
	Vertical Cladding	8
	Fire performance	10
	Shutters, Louvres & Fins	11
	Finishing Options for Facades	14
3	Decking	17
4	Windows & Doors	25
5	Canal Lining	30
6	Fences	32
7	Structural	35
8	Specifications	39
9	Case Studies	43
10	Contact	46

2 CLADDING

Fasteners

- Use screws, ring shank or other improved nails of at least grade 1.4301 / A2 (general applications) or grade 1.4401 / A4 (coastal or industrial sites).
- Holes should be pre-drilled to:
  - 1mm less than nail Ø
  - to 80% of screw shank Ø
- **Do not:**
  - Use staples or T-nails
  - Drive the nail/screw heads into the board
  - Use galvanised or zinc plated fasteners or accessories
- Boards up to 175mm width may be installed with one fastener, positioned in the middle of the board. Distance to the end of the board should be at least 50mm
- Boards wider than 175mm should be installed with two fasteners, each one at least 15mm from the edge of the board. Distance to the end of the board should be at least 50mm

The number of fasteners depends on fastener type and dimensions, board width and wind load. This should be checked by a licenced engineer at all times.

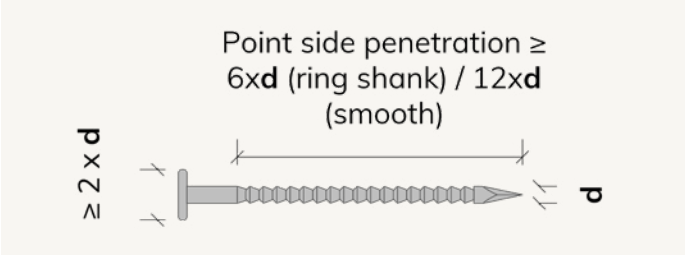

Image 7: Nail requirements.

Corner solutions

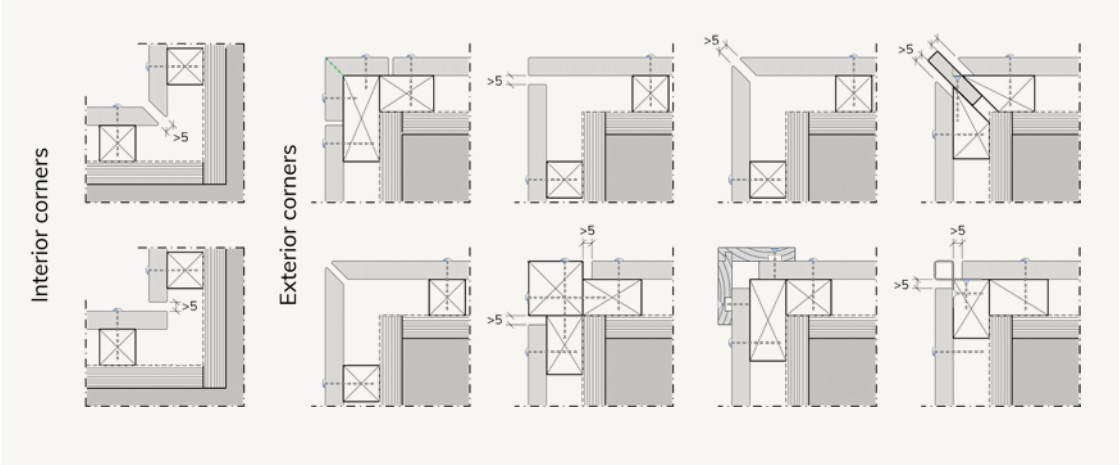

Image 8: Corner solutions. Depending on local building regulations, cavity barriers may be needed at corners.

CONTENTS

1	Introduction	2
2	Cladding & Facades	3
	Ventilated Cladding	5
	Horizontal Cladding	7
	Vertical Cladding	8
	Fire performance	10
	Shutters, Louvres & Fins	11
	Finishing Options for Facades	14
3	Decking	17
4	Windows & Doors	25
5	Canal Lining	30
6	Fences	32
7	Structural	35
8	Specifications	39
9	Case Studies	43
10	Contact	46

Fire Performance of Accoya

Under the provisions of EN 14915:2013+A2:2020 untreated Accoya cladding is classified as Euroclass D-s2,d0 (EN13501-1:2018) on the basis that it has a mean density of 515 kg/m3 but only under the following conditions:

- Minimum thickness 9mm (down to 6mm for no less than 20% of the exposed area of the board) if open air gap behind ≤ 20mm
- Minimum thickness of 18mm (down to 12mm for no less than 20% of the exposed area of the board) if open air gap behind > 20mm
- Boards are fixed via battens to a substrate of at least class A2 – s1, d0
- There are no gaps between boards
- The Accoya is uncoated

For more details please refer to p48-50 of the Accoya Wood Information Guide or to EN 14915:2013+A2:2020

It is possible to raise the classification of Accoya cladding to Euroclass B by treating it with a leach resistant impregnated FR product marketed in the UK as Sentrin FRX and in Scandinavia as Fire-X.

As above, these classifications are dependent on specific design details of the facade. For the most up to date information in this regard please contact Accoya cladding manufacturers listed at www.accoya.com/uk/where-to-buy/

CONTENTS

1	Introduction	2
2	Cladding & Facades	3
	Ventilated Cladding	5
	Horizontal Cladding	7
	Vertical Cladding	8
	Fire performance	10
	Shutters, Louvres & Fins	11
	Finishing Options for Facades	14
3	Decking	17
4	Windows & Doors	25
5	Canal Lining	30
6	Fences	32
7	Structural	35
8	Specifications	39
9	Case Studies	43
10	Contact	46

SHUTTERS, LOUVRES & FINS

The dimensional stability, durability, strength and low maintenance properties make Accoya well suited for application in shutters, louvres and shade screens. The easy machinability ensures that a wide range of geometries can be designed.

Coated Accoya

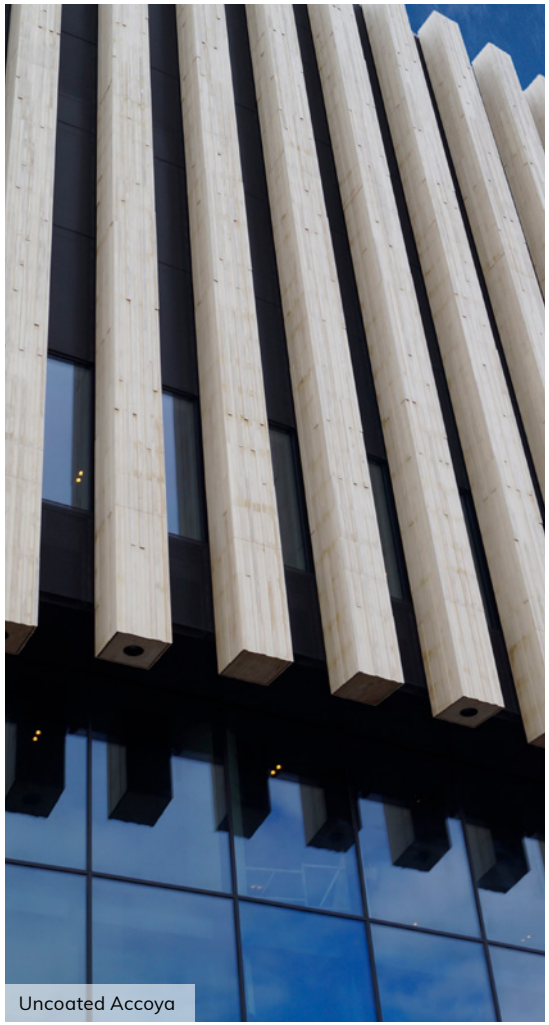

Uncoated Accoya

CONTENTS

1	Introduction	2
2	Cladding & Facades	3
	Ventilated Cladding	5
	Horizontal Cladding	7
	Vertical Cladding	8
	Fire performance	10
	Shutters, Louvres & Fins	11
	Finishing Options for Facades	14
3	Decking	17
4	Windows & Doors	25
5	Canal Lining	30
6	Fences	32
7	Structural	35
8	Specifications	39
9	Case Studies	43
10	Contact	46

General considerations

- As the axial withdrawal strength is the limiting factor in large spans, Accoya A1 quality (classified as C22 strength grade) is recommended. Smaller spans can be made from Accoya A2 quality (classified as C16). Detailed advice should be sought from a qualified structural engineer.
- For overhanging screen parts, where the individual rods are only supported at one end, natural distortion can be reduced by laminating or finger jointing the profile.
- When determining the final size, keep in mind that removing the sticker marks for visible, non-opaque coated surfaces may call for planning 6mm off the raw Accoya board. Discolouration and sticker marks visible on non-coated or translucent stain coated applications will fade over the course of days and months proportionate to the level of UV exposure.
- Please be aware that odd dimensions may increase the louvre cost significantly – keep in mind the standard Accoya dimensions when designing. Larger sizes can be realised by laminating Accoya boards to each other and machining them to the desired dimensions.
- If applying the boards horizontally, please ensure that the top surface is placed at an angle of at least 3° (away from the backing structure) to make sure that water will run off easily. Drip lips profiled into the bottom surface will help shedding water on the front of the louvre.
- Use hardware and fasteners of at least stainless steel grade 1.4301 / A2 or 1.4401 / A4 for coastal areas
- The type of fastener to be used depends on the axial withdrawal strength needed for the desired board dimension, span and wind load. This should be checked by a licenced engineer at all times.
- Ends of coated boards or unprotected top ends of vertical boards should be effectively sealed.

Uncoated Accoya

CONTENTS

1	Introduction	2
2	Cladding & Facades	3
	Ventilated Cladding	5
	Horizontal Cladding	7
	Vertical Cladding	8
	Fire performance	10
	Shutters, Louvres & Fins	11
	Finishing Options for Facades	14
3	Decking	17
4	Windows & Doors	25
5	Canal Lining	30
6	Fences	32
7	Structural	35
8	Specifications	39
9	Case Studies	43
10	Contact	46

Maximum span

The table below gives guidelines on the maximum span distance for low rise buildings and/or low wind speed areas. The fastening system should be designed or checked by a licenced engineer in line with desired board dimensions, span and the local circumstances.

Uncoated Accoya

Please note that with large spans, the maximum span may be therefore limited by the maximum allowable axial withdrawal strength of the fastening system rather than by the stiffness of the Accoya board.

Applying the horizontally installed louvres at an upright angle will increase the stiffness of the boards to some extent. This effect is the most pronounced in wide and thin boards (either rectangular or ellipse shaped) and for overhangs, but non-existent when the louvre is square or round.

Board Shape (Accoya A1)		Dimensions (w x h) [mm]	Maximum span [mm] in application: Horizontal	Vertical	Overhang
Elliptical	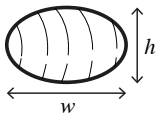	125 x 25	1.000	1.100	500
		140 x 40	1.600	1.750	800
		280 x 42	1.700	1.850	850
Rectangular	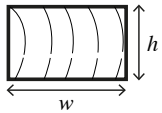	30 x 30	1.450	1.550	700
		100 x 18	850	950	400
		140 x 25	1.200	1.300	550
		180 x 55	2.550	2.750	1.250
		140 x 65	3.000	3.250	1.450

CONTENTS

1	Introduction	2
2	Cladding & Facades	3
	Ventilated Cladding	5
	Horizontal Cladding	7
	Vertical Cladding	8
	Fire performance	10
	Shutters, Louvres & Fins	11
	Finishing Options for Facades	14
3	Decking	17
4	Windows & Doors	25
5	Canal Lining	30
6	Fences	32
7	Structural	35
8	Specifications	39
9	Case Studies	43
10	Contact	46

FINISHING OPTIONS FOR FACADES

Accoya can be left uncoated to weather or coated depending on your preference. This section is a look at the available finishing options.

Coated Accoya – Karl Harrison Landscapes

CONTENTS

1	Introduction	2
2	Cladding & Facades	3
	Ventilated Cladding	5
	Horizontal Cladding	7
	Vertical Cladding	8
	Fire performance	10
	Shutters, Louvres & Fins	11
	Finishing Options for Facades	14
3	Decking	17
4	Windows & Doors	25
5	Canal Lining	30
6	Fences	32
7	Structural	35
8	Specifications	39
9	Case Studies	43
10	Contact	46

Finishing options

Accoya facades can be uncoated but they will gradually turn grey, at a rate that is dependent on site and season though similar to other timbers.

The transition to a relatively uniformly grey facade is often uneven, influenced by factors such as shading but also due to the characteristics of individual boards. Due to the fact that Accoya is a non-toxic timber, discolouring surface moulds may develop in situations where the wood stays damp for long periods of time, such as where the facade is shaded. For more information please refer to the weathering section in the Accoya Wood Information Guide.

Coating systems can be categorized by their film-build - i.e. the thickness of coating that is designed to be on (as opposed to in) the surface of wood. In general terms, those formulated for little or no film-build have a more natural look and are easy to apply but have short maintenance intervals (typically 12 – 18 months). At the other end of the scale high film-build (>100 microns) coatings tend to look more glossy and may require more surface preparation for redecoration but will typically last 10 years before requiring maintenance on Accoya if properly applied -significantly longer than on other types of timber.

A strategy to bridge the colour transition in a more uniform manner than natural weathering is to coat the Accoya pre-installation with a silver-grey pigmented sacrificial coating that has little or no film-build. Such coatings won't last much more than a year even on Accoya but as they breakdown they won't peel or flake and the coating pigments are gradually replaced by the weathered grey of the wood. It may not always be a completely smooth transition but it will be much smoother than natural weathering where elements of the facade are shaded.

CONTENTS

1	Introduction	2
2	Cladding & Facades	3
	Ventilated Cladding	5
	Horizontal Cladding	7
	Vertical Cladding	8
	Fire performance	10
	Shutters, Louvres & Fins	11
	Finishing Options for Facades	14
3	Decking	17
4	Windows & Doors	25
5	Canal Lining	30
6	Fences	32
7	Structural	35
8	Specifications	39
9	Case Studies	43
10	Contact	46

2 FINISHING OPTIONS FOR FACADES

Most coating systems are best applied under factory conditions by the companies that offer Accoya cladding, as listed in the search facility at www.accoya.com/uk/where-to-buy/ These companies can provide samples and advice on the different coatings systems that they offer.

Alternatively coatings manufacturers can supply detailed specifications for their products when used on Accoya. For a list of such companies that have developed specifications for Accoya please refer to (link to system partners list)

Traditional timber cladding profiles are characterised by sharp edges to the profiles. However sharp edges are not conducive to optimum coating performance so Accoya cladding profiles that are intended to be coated should have minimum rounds of 3mm radius on exposed edges.

Since Accoya is modified throughout cladding manufacturers can create different surface textures without compromising the performance of the wood. It is therefore possible to source Accoya cladding with smooth planed, rough sawn, wire brushed or heavily sanded faces. Advice on different options and which coatings are appropriate for different finishes can be sought from the cladding manufacturers.

It is possible to char Accoya without affecting its warranty and the charring effect is considered to be more stable on Accoya compared to other timbers but retention of the charred effect in external applications will still require some sort of sealant that will in turn require maintenance. For further details please contact accoya cladding manufacturers listed at www.accoya.com/uk/where-to-buy/

CONTENTS

1	Introduction	2
2	Cladding & Facades	3
3	Decking	17
	Surface profiling	19
	Sub-frame	20
	Pond Deck	23
	Finishing options for decking	24
4	Windows & Doors	25
5	Canal Lining	30
6	Fences	32
7	Structural	35
8	Specifications	39
9	Case Studies	43
10	Contact	46

DECKING

Accoya is suitable for standard decking types, and in general, the installer should follow the same recommendations for fitting as with traditional wood decking, requiring no special detailing or tools, and performs best when installed properly on a suitable frame.

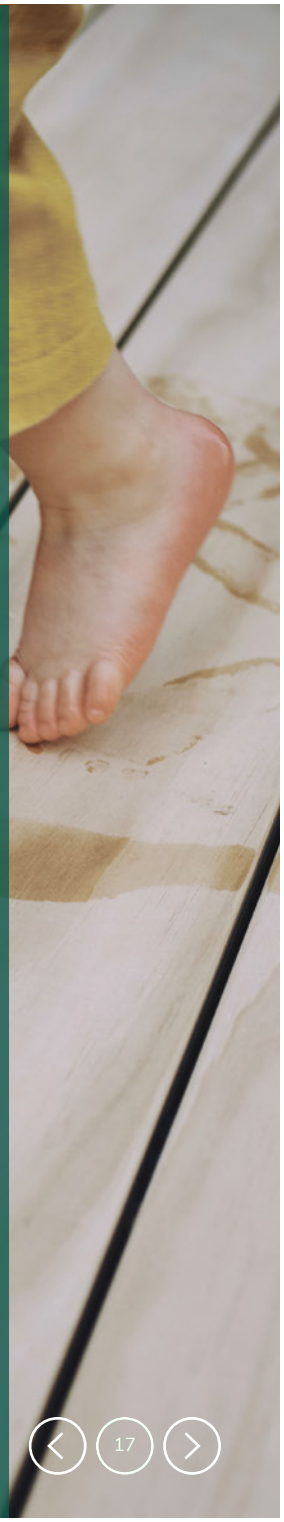

CONTENTS

1	Introduction	2
2	Cladding & Facades	3
3	Decking	17
	Surface profiling	19
	Sub-frame	20
	Pond Deck	23
	Finishing options for decking	24
4	Windows & Doors	25
5	Canal Lining	30
6	Fences	32
7	Structural	35
8	Specifications	39
9	Case Studies	43
10	Contact	46

Accoya – a step up for decking

Beauty, strength, sustainability and all-weather performance are important characteristics when choosing a decking material. Accoya wood embodies all these characteristics – from its natural beauty to its exceptional performance.

Accoya is proven to provide both a long-life and low maintenance decking solution which few other decking materials are able to offer.

Accoya can be profiled to suit project specifications and comes with a 25-year warranty against rot and decay.

PERFORMANCE

25 YEAR WARRANTY

BAREFOOT FRIENDLY

VERY LOW MAINTENANCE

FINISH

WIDE BOARDS AVAILABLE

NATURAL WOOD

MULTIPLE FINISHES

SUSTAINABILITY

SUSTAINABLY SOURCED

LOW ENVIRONMENTAL IMPACT

NON TOXIC

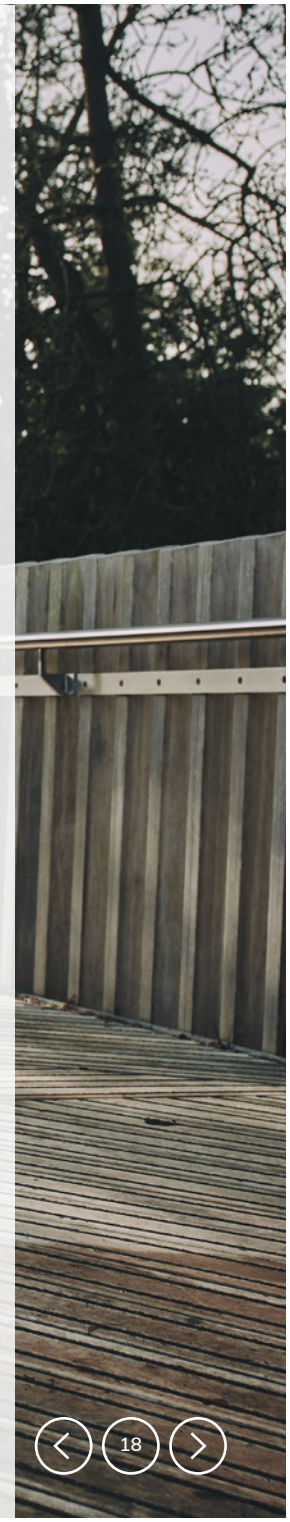

CONTENTS

1	Introduction	2
2	Cladding & Facades	3
3	Decking	17
	Surface profiling	19
	Sub-frame	20
	Pond Deck	23
	Finishing options for decking	24
4	Windows & Doors	25
5	Canal Lining	30
6	Fences	32
7	Structural	35
8	Specifications	39
9	Case Studies	43
10	Contact	46

Surface profiling

The surface of Accoya decking boards can be profiled to many designs, the most common being smooth planed with either rounded (1) or splayed edges (2). Ribbed surfaces may have rounded (3), triangular (4, 5) or square (6) grooves milled into (part of) the surface.

- A deep profile (>3mm) will reduce the board thickness to be calculated with in respect to the centre-to-centre distance of the sub-frame
- Dirt and water will be collected and retained in the grooves, causing a quicker build-up of unsightly and slippery biofilm
- A delicate surface profile and sharp edges will be sensitive to mechanical damage
- Ribbing the surface will not increase the slip resistance in comparison to a smooth planed surface
- If a profiled surface is chosen for aesthetic reasons, a relatively wide rounded one and/or grooves at some distance to each other (e.g. 7) is preferable.

Joints

Accoya decking boards need to be installed with a mutual distance of at least 1mm. When meeting other construction elements, between the length of two boards, and when the joints are the main ventilation openings of the deck, a free space of 5-10mm should be allowed for.

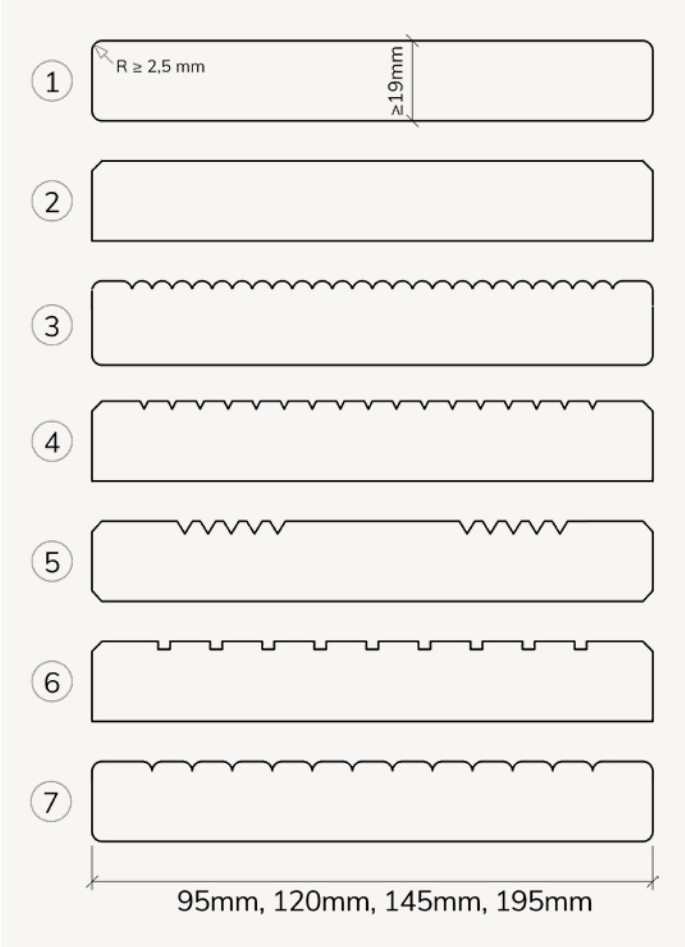

Image 1: Examples of decking board profiles.

CONTENTS

1	Introduction	2
2	Cladding & Facades	3
3	Decking	17
	Surface profiling	19
	Sub-frame	20
	Pond Deck	23
	Finishing options for decking	24
4	Windows & Doors	25
5	Canal Lining	30
6	Fences	32
7	Structural	35
8	Specifications	39
9	Case Studies	43
10	Contact	46

Sub-frame

Ventilation

Like all decking materials, Accoya performs best when installed properly on a suitable frame and in a ventilated system, characterised by continuous ventilation beneath the decking boards. Minimum requirements are depicted opposite.

The subsurface the decking is installed on should be sufficiently strong and rigid and with a slope of at least 2% (up to 5%). Any insulation fitted beneath the deck should be of sufficiently high compressive strength.

Material

The sub-frame can be made of Accoya or timber of durability class 1 or 2. In case of a risk of leaching (e.g. of preservative treatment), apply a barrier between the sub-frame and the Accoya boards. Placing a timber sub-frame on soil without a protection against rising water should be avoided, as should direct contact between Accoya and concrete.

The sub-frame may also be made from aluminium profiles, but note that the surface of aluminium may oxidize to a certain extent. The aluminium alloys recommended for use with Accoya are 3003, 5356, 6005, 6060, 6061, 6063 and 6082. Accsys anticipate the following grades will also perform well: 6061, 5154, 5052, 3052 and 1100.

Alternatively, the aluminium sub frame can be physically isolated from direct contact with the use of e.g. plastic (or stainless steel) spacers, EPDM tape and/or coating of the aluminium.

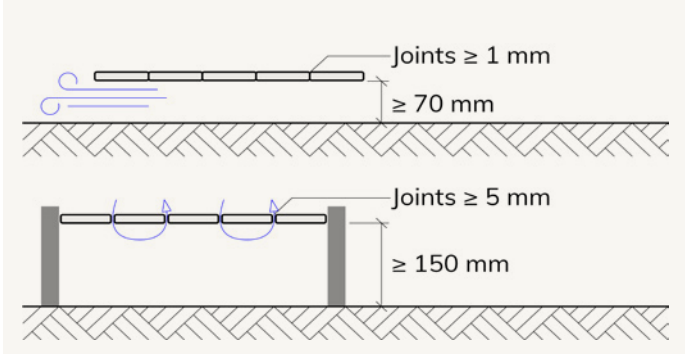

Image 2: Ventilation requirements.

Uncoated Accoya

CONTENTS

1	Introduction	2
2	Cladding & Facades	3
3	Decking	17
	Surface profiling	19
	Sub-frame	20
	Pond Deck	23
	Finishing options for decking	24
4	Windows & Doors	25
5	Canal Lining	30
6	Fences	32
7	Structural	35
8	Specifications	39
9	Case Studies	43
10	Contact	46

3 DECKING

Dimensions

The dimensions of the sub-frame joists should be in accordance with all applicable building standards and codes. To insure the strength of the total system – dimensions, centre-to-centre distance, number and type of fasteners that are required for the use class loads – this should always be checked by a licenced engineer.

If the sub-frame joists are very wide (> 50mm), it is best practice to reduce the contact surface with the decking boards, increasing the drying speed of the boards. Examples of how to achieve this are depicted below.

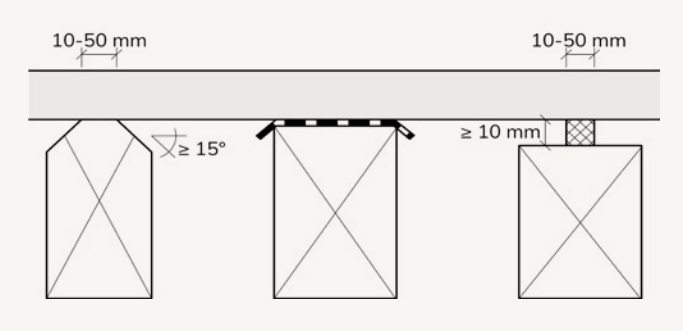

Image 3: Joist details.

Fasteners

- As Accoya is slightly acidic, like most durable woods, it is recommended to use stainless steel grade 1.4301 / A2 (general applications) or grade 1.4401 / A4 (for coastal or industrial sites)
- To ensure a durable and lasting fixing, the boards should be fixed with at least 50mm clearance to the end of the board (pre-drill holes to 1mm less than the screw shank diameter).

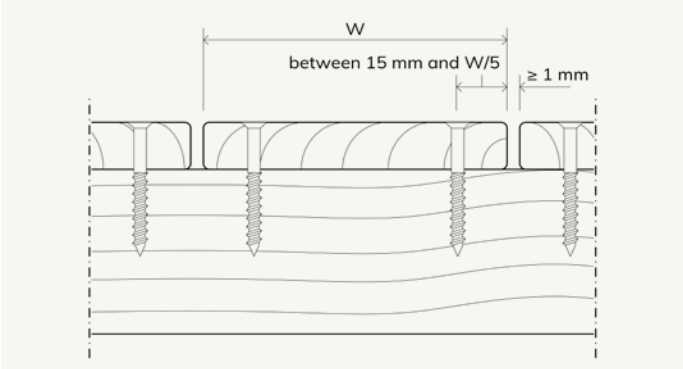

Image 4: The distance to the side edges of the boards is between 15mm and ⅕th of the board width.

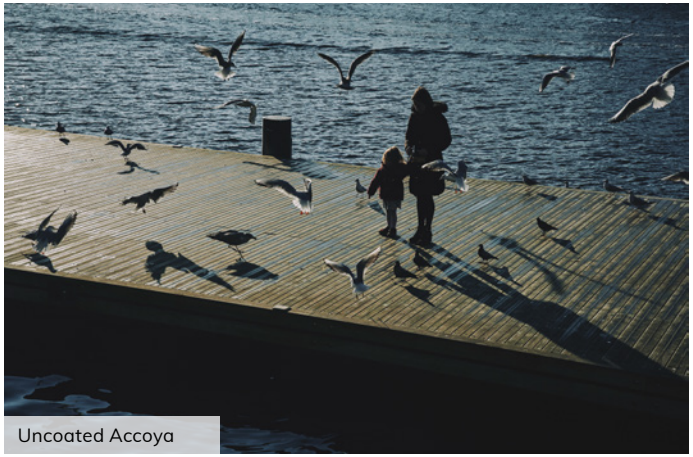

Uncoated Accoya

CONTENTS

1	Introduction	2
2	Cladding & Facades	3
3	Decking	17
	Surface profiling	19
	Sub-frame	20
	Pond Deck	23
	Finishing options for decking	24
4	Windows & Doors	25
5	Canal Lining	30
6	Fences	32
7	Structural	35
8	Specifications	39
9	Case Studies	43
10	Contact	46

3 DECKING

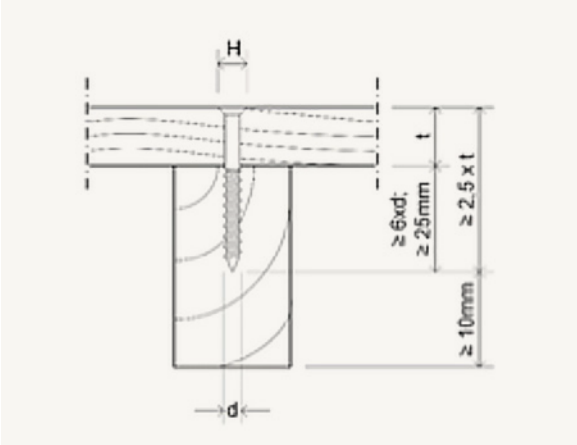

Image 5: The recommended point side penetration of screws into the sub-frame is at least 25mm, 6 x shank diameter or 1.5 x board thickness (whichever is the largest).

Minimum dimensions for:	H	d
Deck in normal use with sub-frame distance less than 60cm	≥ 8mm	≥ 5mm
Deck in public area or with high(er) loads	≥ 10mm	≥ 6mm

Fixing distance

The centre-to-centre distance of a sub-frame depends highly on the board thickness the fixing system and the planned load (use case). Wood decking for pedestrian use only and installed directly above a floor or the ground can be classified as a non-structural element, and a rule of thumb in determining the sub-frame distance 20 x the board thickness on centre. The table below gives some examples for maximum spans in normal use situations with screws.

A licenced engineer should always be involved when deviating from the rule of thumb above and/or when installed in a public area or expected higher loads.

For invisible fixing systems please seek advice with the fastener system producer for centre-to-centre distances of the sub-frame.

Board thickness (mm)	Board width (mm)	CTC distance sub-frame (mm)
19	120 145	400 460
21	120 145	480 550
24	95 120 145	450 600 650
28	95 120 145	590 720 750
33	95 120 145	760 840 880

Table 1: Examples of maximum spans in normal use decking applications.

CONTENTS

1	Introduction	2
2	Cladding & Facades	3
3	Decking	17
	Surface profiling	19
	Sub-frame	20
	Pond Deck	23
	Finishing options for decking	24
4	Windows & Doors	25
5	Canal Lining	30
6	Fences	32
7	Structural	35
8	Specifications	39
9	Case Studies	43
10	Contact	46

Pond deck

Use posts of at least 90 x 90 mm, on a c.t.c. distance of 400 to 600 mm maximum. The length of the posts is dependent on the pond depth and the necessary grounding depth (dependent on the soil, but at least 1 m). The top edge needs to be effectively sealed with an end grain sealer.

Connect the posts with cross bars (at least 45 x 70 mm) on the top side, and fasten with 2 bolts per post. The distance between the water surface and the cross bars should be at least 200 mm at average water level, but never immersed in the water.

Boards of a minimum thickness of 28 mm to be fastened on the cross bars according to the decking guidelines stated above.

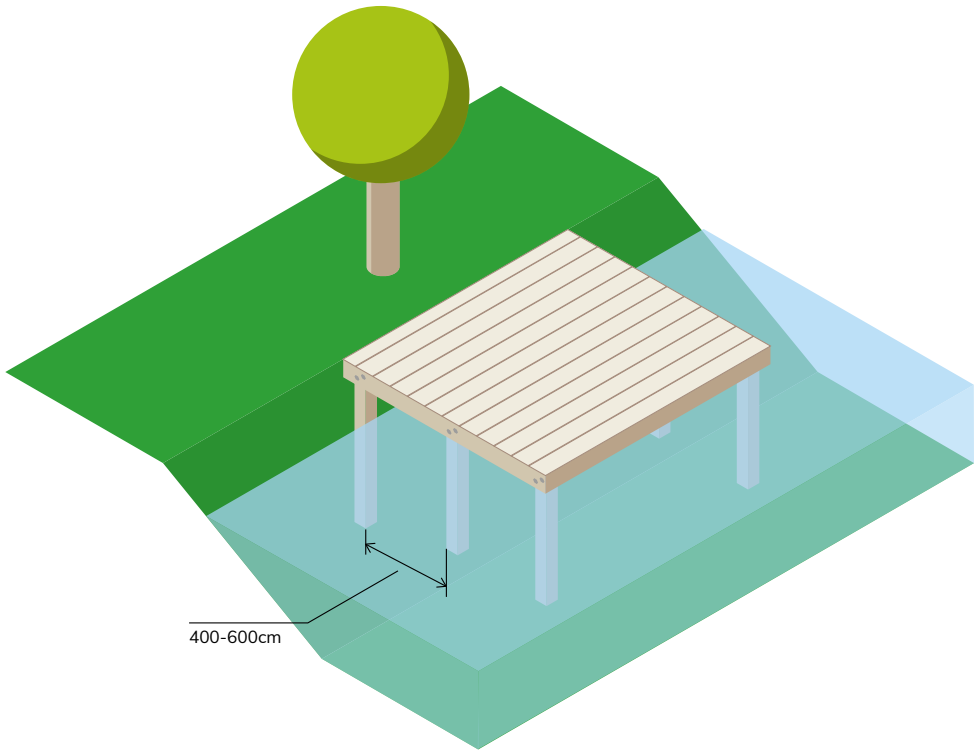

CONTENTS

1	Introduction	2
2	Cladding & Facades	3
3	Decking	17
	Surface profiling	19
	Sub-frame	20
	Pond Deck	23
	Finishing options for decking	24
4	Windows & Doors	25
5	Canal Lining	30
6	Fences	32
7	Structural	35
8	Specifications	39
9	Case Studies	43
10	Contact	46

Finishing options for decking

Accoya decks can be uncoated but they will gradually turn grey, at a rate that is dependent on site and season though similar to other timbers. Due to the fact that Accoya is a non-toxic timber, discolouring surface moulds may develop in situations where the wood stays damp for long periods of time, such as where the deck is shaded. For more information please refer to the weathering section of the Accoya Wood Information Guide.

ITI Timspec, an Accoya distributor in New Zealand, has commissioned slip resistance testing according to AS/NZS 3661.1 at OPUS International Consultants, Petone, on several of their profiled and un-profiled decking boards.

The results for the wetted boards, tested along the grain/surface texture lines are:

- Uncoated, rough sawn **0.47**
- Uncoated, ruffer head (small grooves) **0.37**
- Uncoated, band sawn (notch profile) **0.47**

In the UK, the minimum value expected under Health & Safety Executive regulations and UK for a wetted floor is 36 (**0.36**). If so required, slip resistant coatings or applied strips can be used on Accoya wood in the same way as on other timber decking.

CONTENTS

1	Introduction	2
2	Cladding & Facades	3
3	Decking	17
4	Windows & Doors	25
	Processing	26
	Coating	28
	Hardware & Sealants	29
5	Canal Lining	30
6	Fences	32
7	Structural	35
8	Specifications	39
9	Case Studies	43
10	Contact	46

WINDOWS & DOORS

The design of windows and doors with Accoya should be done according to local building regulations and incorporating best industry practices.

CONTENTS

1	Introduction	2
2	Cladding & Facades	3
3	Decking	17
4	Windows & Doors	25
	Processing	26
	Coating	28
	Hardware & Sealants	29
5	Canal Lining	30
6	Fences	32
7	Structural	35
8	Specifications	39
9	Case Studies	43
10	Contact	46

Accoya windows and doors that stand the test of time

Window frames and doors made from Accoya wood will outperform the best tropical hardwoods, offering improved thermal insulation performance, durability and resistance to shrink and swell. A significant added bonus is that the paint on Accoya windows will require much less maintenance than on other timbers.

PERFORMANCE

- 50 YEAR WARRANTY
- VERY LOW MAINTENANCE
- HIGHLY STABLE

FINISH

- NATURAL WOOD
- IDEAL FOR COATING
- BESPOKE OPTIONS

SUSTAINABILITY

- NON TOXIC
- CARBON NEGATIVE
- SUSTAINABLY SOURCED

CONTENTS

1	Introduction	2
2	Cladding & Facades	3
3	Decking	17
4	Windows & Doors	25
	Processing	26
	Coating	28
	Hardware & Sealants	29
5	Canal Lining	30
6	Fences	32
7	Structural	35
8	Specifications	39
9	Case Studies	43
10	Contact	46

Windows & Doors

The principles of designing Accoya windows and doors are the same as designing with any other timber except that narrower sections of Accoya can sometimes be used where the stability of other timbers is the limiting factor in heritage windows. Accoya shrinks and swells significantly less than other timbers but it can still move and this needs to be accounted for in joinery design.

Many joinery companies are experienced in making external joinery from Accoya, and are therefore in the best position to advise on design details if required. Details of these approved companies can be found at www.accoya.com/uk/where-to-buy/

Coated Accoya

CONTENTS

1	Introduction	2
2	Cladding & Facades	3
3	Decking	17
4	Windows & Doors	25
	Processing	26
	Coating	28
	Hardware & Sealants	29
5	Canal Lining	30
6	Fences	32
7	Structural	35
8	Specifications	39
9	Case Studies	43
10	Contact	46

4 WINDOWS & DOORS

Coating

The use of a factory-applied high film-build coating system is recommended for external Accoya joinery in UK conditions, as opposed to low film-build coatings or no coating at all. All of the approved joinery companies will be able to advise on suitable joinery coatings.

To summarise, best practices for joinery manufacturers include:

- A fully factory applied joinery coating is strongly recommended. If site finishing is required, then at least a primer and mid coat should be applied in the factory and the top coat must be applied before the joinery gets wet on site.
- For opaque coating systems use an effective stain blocking primer.
- Translucent coating systems should contain an effective mouldicidal component to protect the wood from unattractive moulds and mildew. As with other wood types and being a natural material, the porosity of Accoya may vary. Therefore when applying translucent stains, it is advisable to test a sample area first.
- Sealers must be used on end grain throughout the joinery, with a product that is compatible with the paint system and approved by the coating manufacturer.
- Dip and flow coat application of the first coating layer is acceptable on Accoya but care should be taken to saturate the wood.
- Coating manufacturer's application methodologies and guidance should be followed with particular focus on avoiding cold coatings (should typically be above 15°C at application), correct film thickness and appropriate drying techniques/ conditions.
- Coatings should be thoroughly cured in a moisture and temperature controlled environment and in line with coating manufacturer's guidelines.

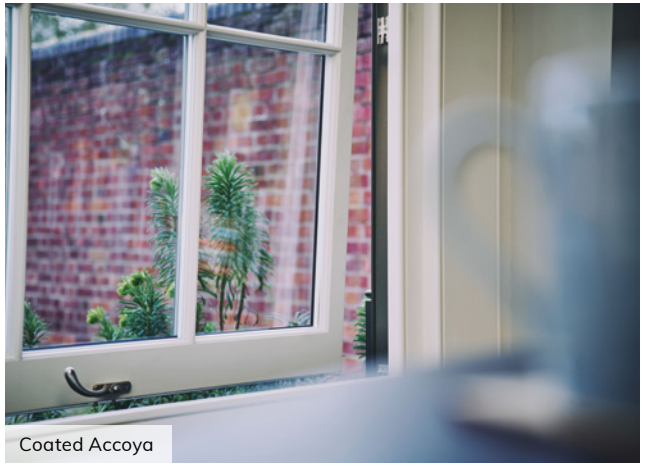
Coated Accoya

Coated Accoya

CONTENTS

1	Introduction	2
2	Cladding & Facades	3
3	Decking	17
4	Windows & Doors	25
	Processing	26
	Coating	28
	Hardware & Sealants	29
5	Canal Lining	30
6	Fences	32
7	Structural	35
8	Specifications	39
9	Case Studies	43
10	Contact	46

4 WINDOWS & DOORS

Hardware

Use stainless steel ironmongery, fasteners and fixtures that conform to EN 10088-1, such as widely used 1.4301 (A2) or 1.4401 (A4) quality stainless steel. The A4 quality should be used in particularly challenging environments, such as in coastal regions or near strong industrial zones.

When stainless steel or other corrosion resistant metals for the hardware are not available, coated fixtures (such as with epoxy, lacquer, polyurethane or powder coating) can be considered for those locations where moisture and condensation exposure risk is low (for example the dry side of windows and doors). Damage to the coating during installation should be prevented to reduce risk of corrosion.

Alternatively, applying 3 layers of paint behind hardware that may be prone to corrosion helps create an isolation barrier between it and the wood. It is also good joinery practice to spray inside any lock housings and apply end grain sealer.

More detailed information on contact between Accoya and metals can be found in section 07 of the Accoya Wood Information Guide, here.

Sealants

Glazing sealants (silicon, polyurethane, MS-polymer) and sealants used in double-pane glass (e.g. poly-sulphide, silicone and polyvinyl butyral) need to be tested and approved for use with Accoya by the sealant supplier.

When installing unfinished Accoya wood, adhesion can be improved by applying a primer before applying the sealant (please refer to the guidelines described in section 6 of the Accoya Wood Information Guide on gluing here).

Coated Accoya

Coated Accoya

CONTENTS

1	Introduction	2
2	Cladding & Facades	3
3	Decking	17
4	Windows & Doors	25
5	Canal Lining	30
6	Fences	32
7	Structural	35
8	Specifications	39
9	Case Studies	43
10	Contact	46

CANAL LINING

Accoya wood's high performance was proven with two Dutch project tests in the Flevopolder near Almere, one installed in 1995 and one in 2000. The SHR institute in the Netherlands originally set up the tests and made detailed inspections at respective 15 and 20 year exposure periods in 2015.

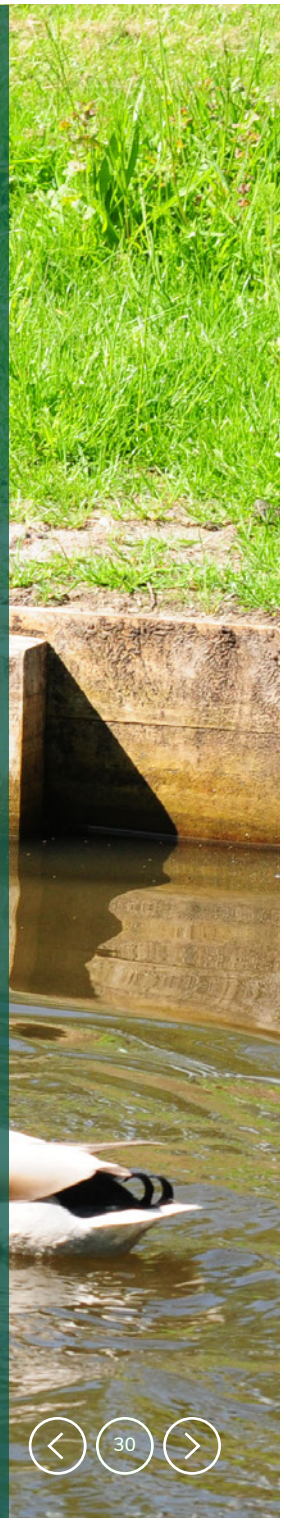

CONTENTS

1	Introduction	2
2	Cladding & Facades	3
3	Decking	17
4	Windows & Doors	25
5	Canal Lining	30
6	Fences	32
7	Structural	35
8	Specifications	39
9	Case Studies	43
10	Contact	46

Canal Lining

This image shows an example of possible canal lining application.

Light structures as shown in these images below and opposite have the primary function of protecting the outer slope against bank erosion.

The retaining function is limited, which means that the retaining height must not exceed 0,80 m, with a slope of 1: 3 or less on either side of the lining. In case of a paved road next to the lining, the roadside bank must be at least 1m wide.

These constructions consist of wooden posts with wooden boards or partitions along them. The connections between the boards (lengthwise) should be covered with geotextile on the bank side. No (bulkhead) anchors may be used. If all the above conditions are met, no further check is required.

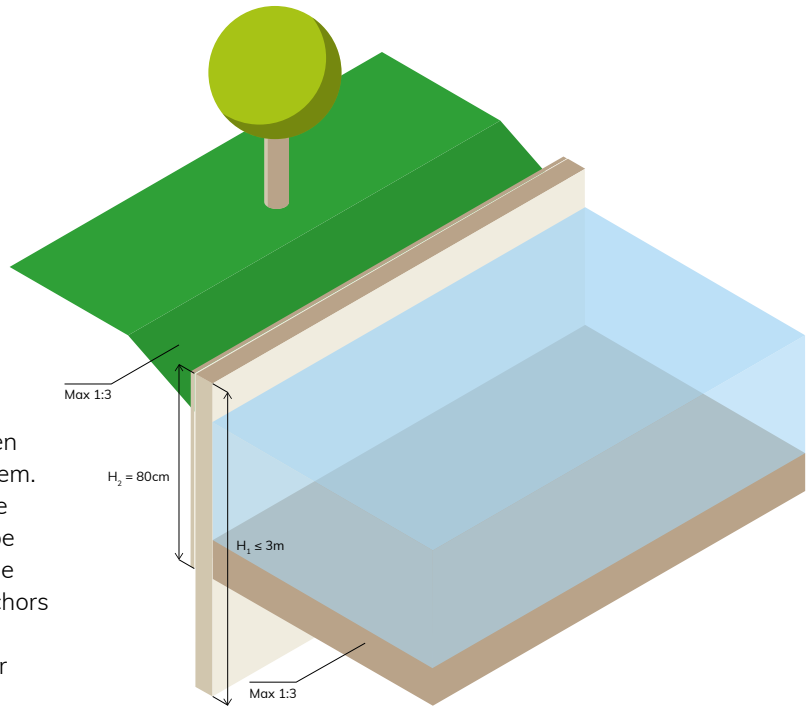

Image 1: Vertical cross section.

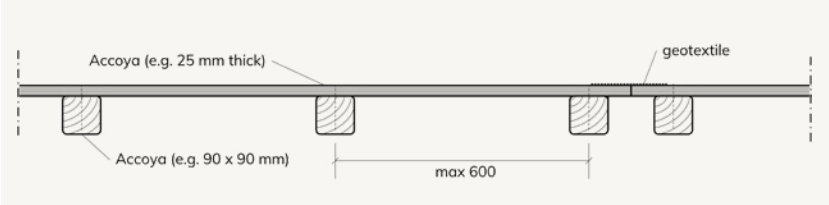

Image 2: Horizontal cross section.

CONTENTS

1	Introduction	2
2	Cladding & Facades	3
3	Decking	17
4	Windows & Doors	25
5	Canal Lining	30
6	Fences	32
7	Structural	35
8	Specifications	39
9	Case Studies	43
10	Contact	46

FENCES

Accoya has been extensively used for fencing related infrastructure such as along highways where longevity of the asset is critical.

CONTENTS

1	Introduction	2
2	Cladding & Facades	3
3	Decking	17
4	Windows & Doors	25
5	Canal Lining	30
6	Fences	32
7	Structural	35
8	Specifications	39
9	Case Studies	43
10	Contact	46

Fences

For horizontal infill panels vertical boards are fastened to the fence posts. Fence posts can be made from any grade of Accoya but if a strength rating is required then A1 is equivalent to C22 and A2 is equivalent to C16.

- Use hardware and fasteners of at least stainless steel grade 1.4301 / A2 or 1.4401 / A4 for coastal areas
- Unprotected top ends of vertical posts or infill boards should be effectively sealed.

Dimensions

- A typical post dimension is 68 x 68mm or 90 x 90mm (for large fence surfaces and/or higher wind speed area's). The length should be at least 1,5 times the fence height.

Fence height	Max. c.t.c.
1.8m	1.3m
1.5m	1.5m
1.3m	1.8m

- The maximum fence surface is 1,8 x 1,8m (for general use and low wind speed areas). The table below gives guidelines on the maximum centre-to-centre distance for higher (moderate) wind speed areas.
- It is recommend to use connecting/infill boards of at least 18mm thick. The minimum thickness is 14mm.
- The post may be grounded by inserting them into the ground (in a pre-drilled hole of roughly the size of the post, at least 600mm deep), installed on metal post supports (on top of fins that are driven into the ground) or on metal saddles that are poured in a concrete foot. Follow manufacturer's guidelines on dimensions and installation.
- Consider applying a cap rail on top of the posts to protect (vertical) infill boards (bottom fixed).

CONTENTS

1	Introduction	2
2	Cladding & Facades	3
3	Decking	17
4	Windows & Doors	25
5	Canal Lining	30
6	Fences	32
7	Structural	35
8	Specifications	39
9	Case Studies	43
10	Contact	46

6 FENCES

Infill types

A. Board-on-board: shadowbox (boards on both sides) or one sided – both vertical as well as horizontal orientation

B. Spaced boards: possibly with patterned top ends

C. Solid board: vertical, horizontal and diagonal orientation.

General considerations

- Solid boarded and board-on-board fences give maximum privacy. Shadowbox fences will also give privacy if the overlap of the boards is large enough
- Check local codes and homeowner's association guidelines that might overn fence style, size and placement. Determine if a permit is necessary
- Consider possible local or national codes on rights of way, setbacks between other structures or property lines, and spacing next to sidewalks or roads
- Additional requirements may be necessary for fences in certain use, e.g. when used as a pool barrier or in high wind speed zones
- Caution: before beginning any excavation, check for possible underground utilities.

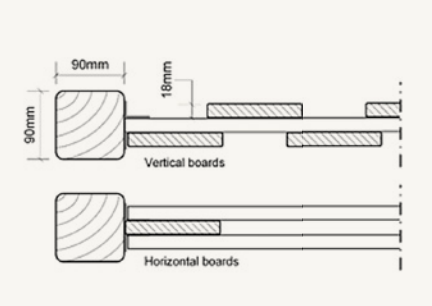

Image 1: Shadowbox, cross sections.

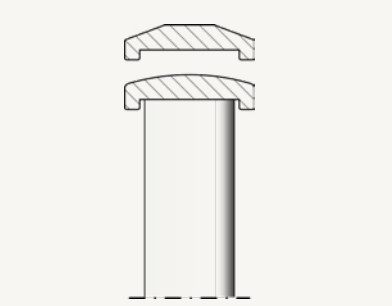

Image 2: Cap rails.

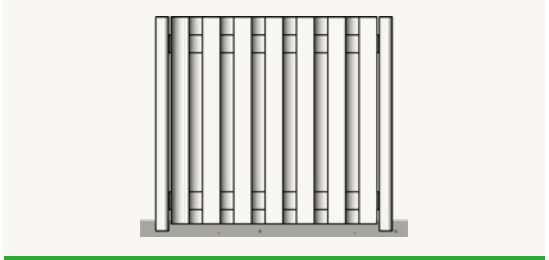

Image 3: Shadowbox, view.

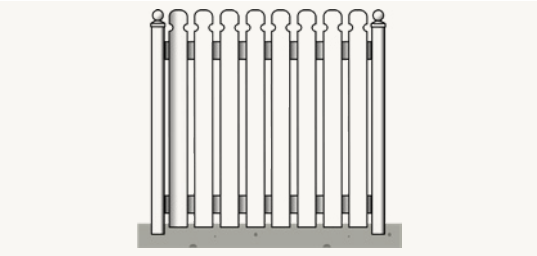

Image 4: Vertical spaced boards, view.

Image 5: Horizontal solid boards, view.

CONTENTS

1	Introduction	2
2	Cladding & Facades	3
3	Decking	17
4	Windows & Doors	25
5	Canal Lining	30
6	Fences	32
7	Structural	35
8	Specifications	39
9	Case Studies	43
10	Contact	46

STRUCTURAL

Traditional methods of ensuring that structural wood is sufficiently durable for external applications either involve toxic biocides or the use of slow-grown tropical hardwoods that are difficult to source sustainably. Accoya offers a considerably more sustainable solution.

CONTENTS

1	Introduction	2
2	Cladding & Facades	3
3	Decking	17
4	Windows & Doors	25
5	Canal Lining	30
6	Fences	32
7	Structural	35
8	Specifications	39
9	Case Studies	43
10	Contact	46

Structural Accoya

The Accoya acetylation process improves hardness and compression strength significantly.

Accoya is approved for a general building use by the German Institute for Building Technology (DIBt) for load bearing structural applications. This DIBt approval qualifies the strength class of A1 and A2 solid Accoya timber, based on the European strength class system of C classes (EN338). Accoya A1 quality is equivalent to C22 strength grade and Accoya A2 quality is equivalent to C16 (see adjacent table).

The approval applies to Accoya wood in the widths 100mm to 250mm with a thickness of 25mm to 100mm, and can be used both flat and upright. C22 and C16 strength classes are common for structural timbers produced from spruce and pine in the UK and Mainland Europe.

Property strength [N/mm2]		Characteristic values for strength class: C16 (A2 Grade)	C22 (A1 grade)
Bending	$f_{m,k}$	16	22
Tension			
Parallel to grain	$f_{t,0,k}$	10	13
Perpendicular	$f_{t,90,k}$	0,5	0,5
Compression			
Parallel to grain	$f_{c,0,k}$	17	20
Perpendicular	$f_{c,90,k}$	2,2	2,4
Shear	$f_{v,k}$	1,8	2,4
Stiffness [kN/mm²]			
Mean MOE parallel	$E_{0,mean}$	8	10
5% MOE parallel	$E_{0,05}$	5,4	6,7
Mean MOE perpendicular	$E_{90,mean}$	0,27	0,33
Mean shear modulus	G_{mean}	0,5	0,63
Density [kg/m³]			
Density	0_k	310	340
Mean density	P_{mean}	370	410

NB: Characteristic values are used in structural grade classification and stated as the average result minus two standard deviation.

CONTENTS

1	Introduction	2
2	Cladding & Facades	3
3	Decking	16
4	Windows & Doors	24
5	Canal Lining	29
6	Fences	31
7	Structural	34
8	Specifications	38
9	Case Studies	43
10	Contact	46

7 STRUCTURAL

Structural Accoya

The standard wood design safety factors (kdef, kmod) as given in EN 1995-1 were determined in the DIBt test programme to be appropriate and may be used. Accoya wood may be fastened to a timber sub-frame with nails, clamps, wood screws, dowels and bolts.

For non pre-drilled holes, the minimum spacing distance and edge/end clearance (EN 1995-1- 1, table 8.2) should be in line with wood with a density between 420 and 500kg/m³. 2.4 Property characteristic values for strength class The strength class determining properties of timber are strength, stiffness and density.

The values mentioned in EN 338 are socalled characteristic values of the material properties. For safety reasons, these are threshold values that at least 95% of the pieces of timber will meet. Hence these characteristic values are lower than the average mechanical property values commonly reported for timber species. Average mechanical property values should not be used for structural calculations.

To achieve design values, the characteristic values are divided by a material factor and multiplied by climate, load duration and beam height modification factors (EN 1995-1-1). Accoya wood in B grade is not strength graded in any way and is not included in the scope of the DIBt work programme or certification.

Coated Accoya

CONTENTS

1	Introduction	2
2	Cladding & Facades	3
3	Decking	17
4	Windows & Doors	25
5	Canal Lining	30
6	Fences	32
7	Structural	35
8	Specifications	39
9	Case Studies	43
10	Contact	46

Best practice in design of structural laminate

The physical and chemical changes associated with acetylation, can affect the curing process of the glue line. In particular adhesives which require moisture for hardening can be affected by the particularly low moisture content of Accoya. Testing has so far been undertaken on Accoya wood by Dynea and Henkel, in accordance with EN301 and EN 302-1 (PRF adhesives) or EN 15425 (PU adhesives), to confirm that their adhesives are suitable for structural bonding of Accoya. It may be possible to use other adhesives, but these would need to be confirmed by the relevant manufacturers guidelines.

Whilst EN14080:2013 suggests that the durability of glued laminated products shall be taken as the natural durability according to EN 350-2 of the timber from which they are made, and therefore DC1 with Accoya, professional bodies such as the Structural Timber Association (STA) in the UK consider the use of well-maintained water-repellent stain finishes together with rain screening and other protection measures as essential when used in Glulam applications, and therefore the Accoya Warranty will only apply to Glulam applications where this guidance and moisture exclusion is achieved and maintained.

Please contact your Accsys sales manager for best practice guidelines related to structural laminate design and maintenance.

Best practice in designing for moisture management in glulam beams includes:

- **Protecting end grain**
- **Orienting lamella to achieve vertical grain on surfaces to minimise checking and water ingress points**
- **A robust adhesive to prevent delamination and moisture ingress**
- **Regular inspection for identification and repair of splits or delamination**
- **A maintained, film forming coating**
- **Drainage, particularly on horizontal surfaces and ventilation**

CONTENTS

1	Introduction	2
2	Cladding & Facades	3
3	Decking	17
4	Windows & Doors	25
5	Canal Lining	30
6	Fences	32
7	Structural	35
8	Specifications	39
9	Case Studies	43
10	Contact	46

SPECIFICATIONS

The following pages offer suggested texts for the specification of Accoya in different applications.
In each case, specific details such as profiles or coating products will need to be added by the specifier.

CONTENTS

1	Introduction	2
2	Cladding & Facades	3
3	Decking	17
4	Windows & Doors	25
5	Canal Lining	30
6	Fences	32
7	Structural	35
8	Specifications	39
9	Case Studies	43
10	Contact	46

Accoya cladding (non FR treated)

Timber species:

"Accoya wood",
(acetylated Pinus radiata).

Accoya wood is manufactured by Accsys trading as Titan Wood B.V.

Accoya cladding is manufactured and distributed through; International Timber, James Latham, Russwood, Vincent Timber, Arnold Laver and other quality timber merchants.

Durability:

Class 1. Very durable

Equilibrium moisture content:

Max 10%

Appearance class:

"Grade A1" as defined Accsys, Accoya Radiata Pine Lumber Grading Specifications.

Fixings:

Stainless steel, A2 or A4 grade (A4 grade required for coastal sites).

Cladding section:

15mm x 145mm shiplap (alter as appropriate). Note that with Accoya it is possible to go as thin as 15mm for T&G or shiplap profiles.

Except where a rating where Euroclass D is required, in which case minimum thickness will be determined by relevant classification report.

Coating:

Translucent, colour to be decided. To be applied to the manufacturer's recommended dry film thickness. End grain sealer to be applied to all exposed end grain. (alter as appropriate).

For further guidance refer to the Accoya wood information guide, or contact Accsys via **www.accoya.com**

CONTENTS

1	Introduction	2
2	Cladding & Facades	3
3	Decking	17
4	Windows & Doors	25
5	Canal Lining	30
6	Fences	32
7	Structural	35
8	Specifications	39
9	Case Studies	43
10	Contact	46

Accoya decking

Timber species:

"Accoya wood",
(acetylated Pinus radiata).

Accoya wood is manufactured by Accsys trading name of Titan Wood B.V.

Accoya cladding is manufactured and distributed through; International Timber, James Latham, Arnold Laver, Russwood, Gripsure and other quality timber merchants.

Durability:

Class 1. Very durable

Moisture content:

Less than 10%

Appearance class:

"Grade A1" as defined by Accsys Technologies, Accoya Radiata Pine Lumber Grading Specifications, Version 9.1

Fixings:

Stainless steel, A2 or A4 grade (A4 required in coastal areas).

Decking profile:

To be defined by architect.

Coating:

No coating or further treatment is required (unless there is a desire to add colour to the Accoya decking, in which case is non film forming stain such as a penetrating oil should be used). To remove surface moulds/algae that may accumulate on the deck surface in damp conditions brush with water. Alkaline cleaning products should not be used though mildly acidic ones are acceptable and pressure washing should be avoided if possible or used at low pressure to avoid lifting of the grain.

For further guidance refer to the Accoya wood information guide, or contact Accsys via **www.accoya.com**

CONTENTS

1	Introduction	2
2	Cladding & Facades	3
3	Decking	17
4	Windows & Doors	25
5	Canal Lining	30
6	Fences	32
7	Structural	35
8	Specifications	39
9	Case Studies	43
10	Contact	46

Accoya wooden window and door components

Timber species:

"Accoya wood",
(acetylated Pinus radiata).

Accoya wood is manufactured by Accsys trading as Titan Wood B.V.

Approved manufacturers of Accoya joinery products can be found at www.accoya.com/uk/where-to-buy/

Durability:

Class 1. Very durable

Moisture content:

Less than 10%

Adhesives:

Refer to the latest version of the Accoya Wood Information Guide.

Contact with metals:

Refer to the latest version of the Accoya Wood Information Guide.

Coating:

Two coats of end grain sealer should be used on all exposed end grain. Opaque systems to include an effective stain blocking primer. A minimum of basecoat(s) and one topcoat (but ideally the complete system) should be factory applied before exposure to moisture. For more details refer to the Accoya Wood Information Guide and our system suppliers list.

Workmanship:

Generally as BS 1186-2:1988 "Timber for and workmanship in joinery, specification for workmanship". Joinery manufacturer to be approved by the Approved Manufacturers Programme.

For further guidance refer to the Accoya wood information guide, or contact Accsys via **www.accoya.com**

CONTENTS

1	Introduction	2
2	Cladding & Facades	3
3	Decking	17
4	Windows & Doors	25
5	Canal Lining	30
6	Fences	32
7	Structural	35
8	Specifications	39
9	Case Studies	43
10	Contact	46

The difference is in the detail

CLADDING, LOUVRES & FINS

Royal Arena in Copenhagen.

Click here to view this case study.

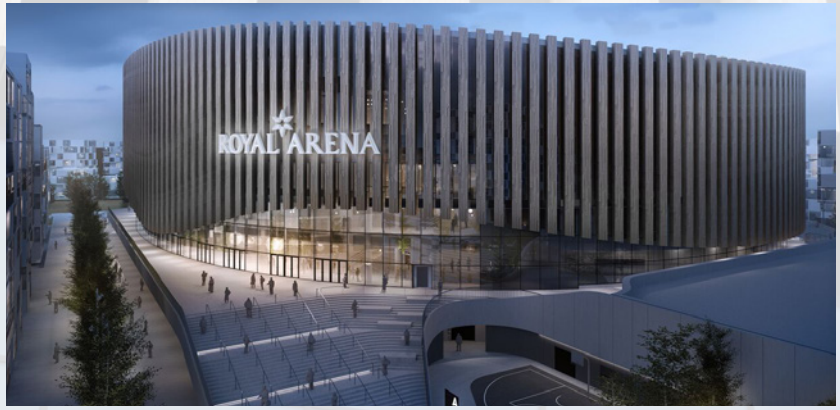

CONTENTS

1	Introduction	2
2	Cladding & Facades	3
3	Decking	17
4	Windows & Doors	25
5	Canal Lining	30
6	Fences	32
7	Structural	35
8	Specifications	39
9	Case Studies	43
10	Contact	46

The difference is in the detail

DECKING

Cambridge University's Botanic Gardens.

Click here to view this case study.

CONTENTS

1	Introduction	2
2	Cladding & Facades	3
3	Decking	17
4	Windows & Doors	25
5	Canal Lining	30
6	Fences	32
7	Structural	35
8	Specifications	39
9	Case Studies	43
10	Contact	46

The difference is in the detail

WINDOWS & DOORS

Dyson's Institute of Engineering and Technology.

Click here to view this case study.

CONTENTS

1	Introduction	2
2	Cladding & Facades	3
3	Decking	17
4	Windows & Doors	25
5	Canal Lining	30
6	Fences	32
7	Structural	35
8	Specifications	39
9	Case Studies	43
10	Contact	46

10 CONTACT

Get in touch

Please email us with enquiries and the responsible sales manager will follow up promptly:
sales@accsysplc.com

United Kingdom and World Wide Enquiries
4th Floor, 3 Moorgate Place,
London EC2R 6EA
+44 (0) 207 421 4300

To find out where to buy please visit:
www.accoya.com/uk/where-to-buy/

Copyright © Accsys 2021. Accsys is a trading name of Titan Wood Limited, a wholly owned subsidiary of Accsys Technologies PLC. Accoya® and the Trimarque Device are registered trademarks owned by Accsys and may not be used or reproduced without written permission from Accsys. Accoya® wood should always be installed and used in accordance with the written instructions and guidelines of Accsys and/or its agents (available upon request). Accsys accepts no liability for any defect, damage or loss that may occur where such written instructions and guidelines are not adhered to.

The information contained within this document is of a generic nature and is not a substitute for obtaining advice on the use of Accoya® in specific circumstances. The information within this document has not been independently verified. Save as provided by law, no warranty (express or implied) or representation is given in respect of the same, including without limitation as to its adequacy, accuracy completeness or appropriateness in any given circumstance. Accsys and its affiliates, officers, employees or advisers expressly disclaim any liability to the fullest extent permitted by law for any loss or damage whatsoever arising in respect of such information or the result of having acted upon it.