WINDOW LEGEND - EXTERNAL VIEWS

1:20

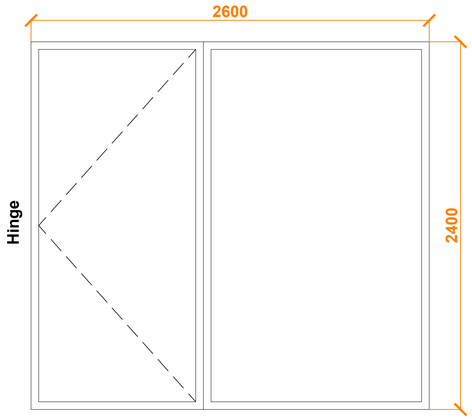

TYPE T2

Ideal Combi Futura+ aluminium/ timber composite.
Terrace/ Balcony door with fixed side window.

External finish - PPC Aluminium (RAL 7016, Anthracite)
Internal finish - Timber, clear lacquer.

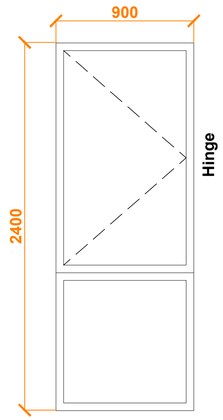

TYPE T3

Ideal Combi Futura+ aluminium/ timber composite.
Window with side-hung opening light.

External finish - PPC Aluminium (RAL 7016, Anthracite)
Internal finish - Timber, clear lacquer.

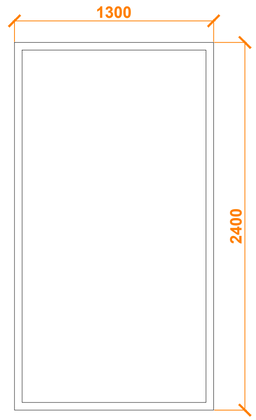

TYPE T4

Ideal Combi Futura+ aluminium/ timber composite.
Fixed window.

External finish - PPC Aluminium (RAL 7016, Anthracite)
Internal finish - Timber, clear lacquer.

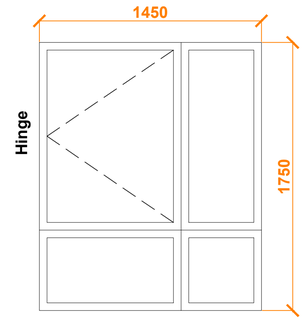

TYPE T5

Ideal Combi Futura+ aluminium/ timber composite.
4-section window with side-hung opening light.

External finish - PPC Aluminium (RAL 7016, Anthracite)
Internal finish - Timber, clear lacquer.

Window Schedule - Level 9

Ref:	Type:	Unit Width:	Unit Height:	Relative Sill Height:	Relative Head Height:	Glazing
W09-1	T5	1450mm	1750mm	450mm	2200mm	Plain. Double Glazed. Toughened safety glass. Low E coating
W09-2	T2	2600mm	2400mm	0mm	2400mm	"
W09-3	T3	900mm	2400mm	0mm	2400mm	"
W09-4	T4	1300mm	2400mm	0mm	2400mm	"
W09-5	T3	900mm	2400mm	0mm	2400mm	"

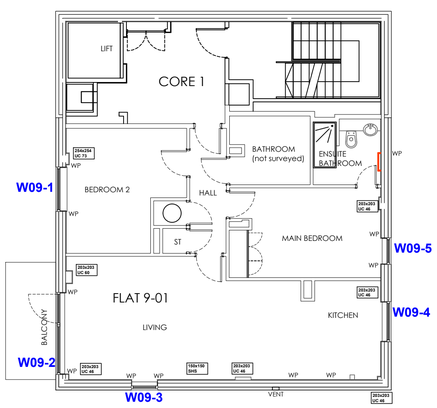

Core 1, 9th Floor

Scale - 1:100

© Copyright - The contents of this drawing may not be reproduced or distributed in part or in whole without the written permission of CLADDING PROJECT MANAGEMENT LTD.

1. Responsibility is not accepted for errors made by others in scaling from this drawing. All construction information should be taken from figured dimensions only.
2. Any dimensional discrepancies to be reported immediately.
3. This drawing must be read in conjunction with any structural or other specialist drawing(s). Any conflicting information to be reported immediately.
4. Cladding Project Management Limited have responsibilities under the Construction (Design and Management) Regulations 2015 to eliminate hazards during design and provide information about residual risks, including informing duty holders of their responsibilities.
5. Note to Contractor: All building / site dimensions and levels, service and invert levels to be checked prior to commencement of works.
6. Note to Contractor: The current Building Regulations and all relevant British standards and Codes of Practice are to be complied with whether noted on this drawing or not.

INDICATIVE SCALE IN METRES 1:20

0 0.5 1 2

INDICATIVE SCALE IN METRES 1:100

0 5 10 15

PLANNING

Rev:	Date:	Amendment:	Amended by:
.	.	.	.

Client: **Base Management Services Ltd.**

Project title: **Base, 12 Arundel Street, Manchester, M15 4JP**

Drawing title: **Core 1 Window Schedule Level 9**

Scale(s) @ A1:	Date:	Drawn by:
Varies	**Oct 2025**	**AW**
Drawing number:	Revision:	Chkd by:
P10041/PL/222	**.**	**HC**

Unit 26, Osprey Court
Hawkfield Way
Bristol
BS14 0BB

T 0117 942 7876
F 0117 942 7871
E info@eastonbevins.co.uk
W www.eastonbevinslimited.co.uk

This Drawing is Copyright.
Contractors must check all dimensions on site.
Only figured dimensions are to be worked from.
Discrepancies must be reported immediately before proceeding.