Key Elevation - East - Proposed
1 : 100

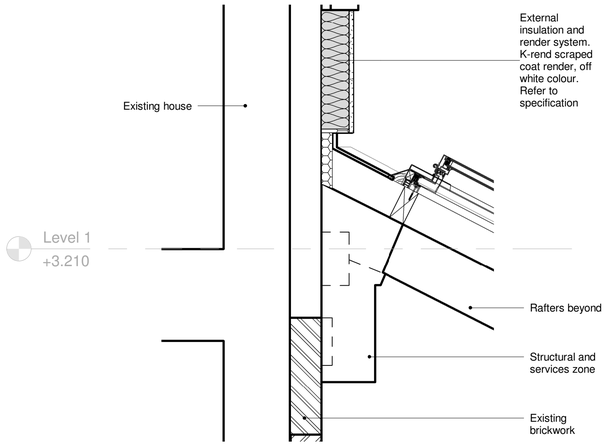

6 Section BB - Detail 01
1 : 10

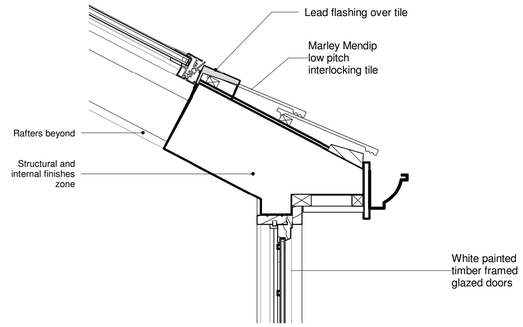

4 Section BB - Detail 02
1 : 10

2 Proposed Detailed Elevations 02
1 : 20

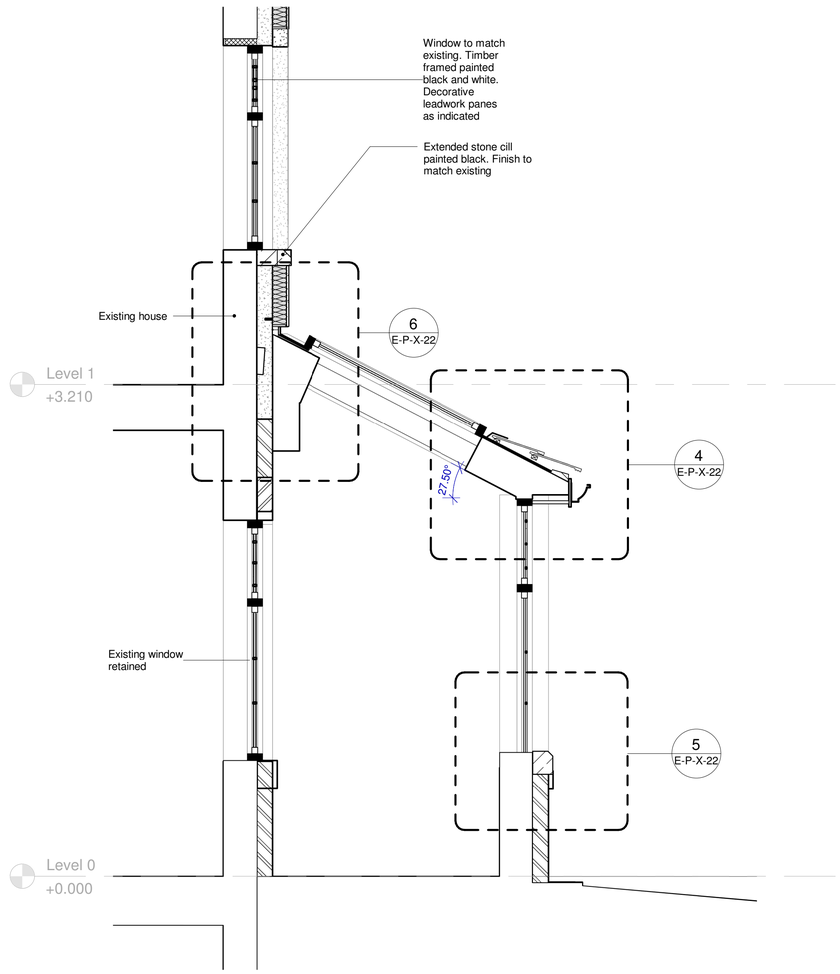

3 Section BB
1 : 20

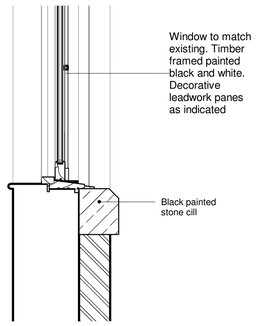

5 Section BB - Detail 03
1 : 10

Notes:

THIS DRAWING IS FOR GUIDANCE ONLY

THIS DRAWING IS NOT TO BE SCALED. EXCEPT FOR THE PURPOSES OF PLANNING APPLICATIONS AND FOR LEGAL PLANS WHERE THE SCALE BAR **MUST** BE USED. ALWAYS REFER TO FIGURED DIMENSIONS.

CONTRACTORS, SUBCONTRACTORS AND SUPPLIERS MUST VERIFY ALL DIMENSIONS ON SITE BEFORE COMMENCING ANY WORK OR MAKING ANY SHOP DRAWINGS.

THIS DRAWING IS TO BE READ IN CONJUNCTION WITH STRUCTURAL, MECHANICAL AND ELECTRICAL ENGINEERS DRAWINGS AND ALL DISCREPANCIES ARE TO BE REPORTED TO THE ARCHITECT.

Rev	Revision Details	Dr	Date
P5	NMA Application		221225
P4	Planning Amendments		210425
P3	Planning		010325
P2	Planning Final Draft		240225
P1	Planning Draft		090225

STUDIO 10 ARCHITECTURE

Client's Name
Christopher Rattew

Job Title
14 Conyngham Road, Manchester, M145SA

Drawing Title
Strip Sections and Elevations 02

Scal
As indicated @ A1

Drawn	Checked	Date
DF	DF	

Job No	Drawing No	Rev
23-17	E-P-X-22	P5

Status
PLANNING

22/12/2025 16:47:20