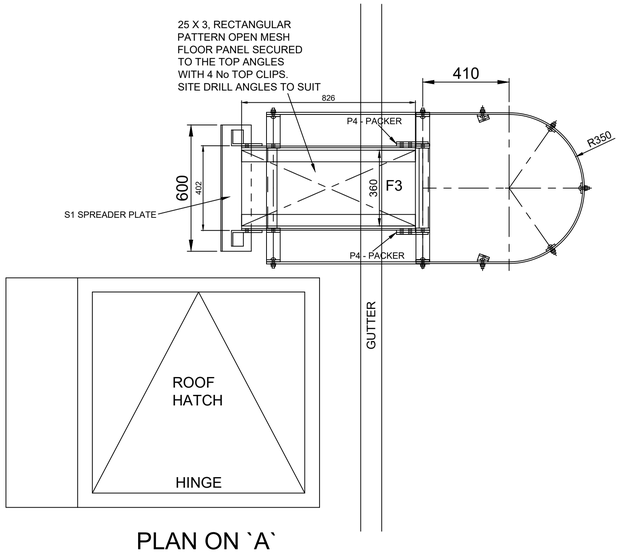

PLAN ON `A`

LADDER `D`
1 No REQ

LADDER `D` PARTS LIST:

AXC1M2 (C/W RUNG CAPS) - 1 No see the elevation
AX3M1 - 2 No pairs see detail
AX7M2 - 2 No pairs see detail
AX8 - 2 No
AX11M2 - 5 No pieces see detail
T1 TIE BRACKET - 1 No see detail
T2 TIE BRACKET - 1 No see detail
H1 - HORIZONTAL FLATS - 4 No see detail
P3 - PLATFORM ANGLES - 1 No pair see detail
P4 PACKERS - 2 No see detail
GUSSET SPLICES - 2 No see detail
F3 FLOOR PANEL (360wide) - 1 No see detail
S1 SPREADER PLATE - 1 No see detail

FITTINGS LIST:

1 No AX3500 BOLT PACK

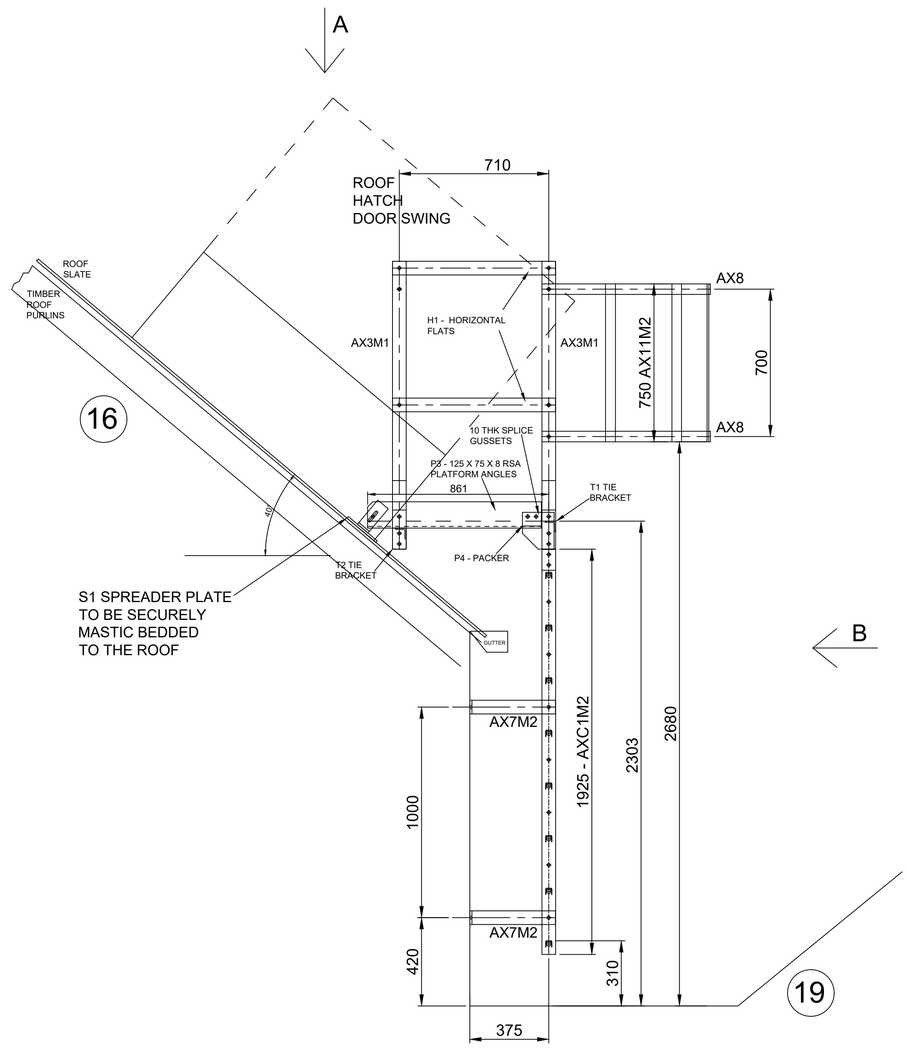

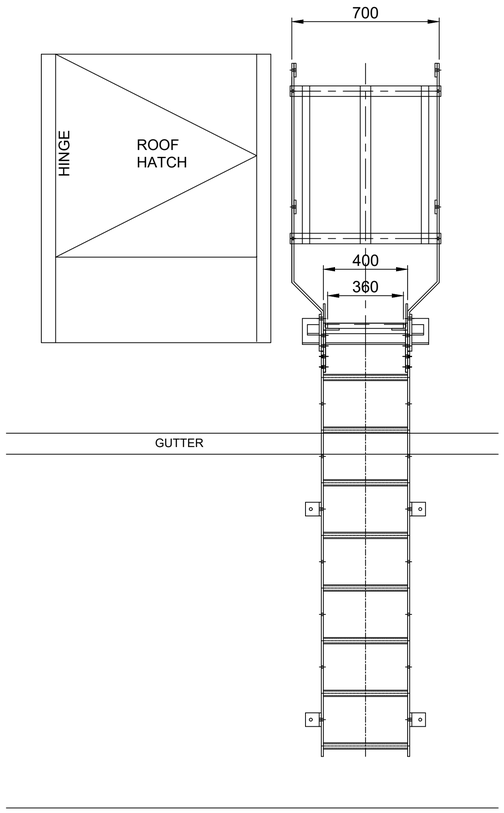

VIEW ON `B`

Rev.	Date.	Signature.	Amendments.	Approved.
E				
D				
C				
B	01-09-23	MDG	REVISED BACK TO A PLATFORM RESTING ON THE ROOF	
A	22-06-23	MDG	MODIFIED TO SUIT SITE SURVEY 14-06-23	

Erection Marks:	Finish:
Steelwork..... ⬡	HOT DIP GALVANISED
Flooring..... ◯	HOT DIP GALVANISED
Handrailing..... ☐	
Other.....	

ALL ITEMS TO BE HARD STAMPED.
ALL WELDS 6mm LEG FILLET WELDS U.N.O

Manufactured in accordance with BS EN ISO 1090
Parts 1 & 2.. Execution class 2
Material Grades: Structural S275JR / CHS S235JR (UON)
Tolerances: Refer to Job Card

Contract:
General Arrangement of Ladder Ref `D` to give access to the hatch on roof 16 from roof 19, Manchester Metropolitan University, Grosvenor Lifecycle, Refurbishment Project.

Customer:

GA Ref:

Mantech Safety Systems Ltd

Drawn: MDG | Date: 24-02-23 | Scale:

Drawing Number: LADDER `D`

Amendment: A B