ROLEC

# BASICCHARGE

Intelligent EV charging pedestal

Designed & Manufactured in the UK

# BASICCHARGE

Intelligent EV charging pedestal

The BASICCHARGE is a simplistic and affordable EV charging pedestal. This versatile charger's integrated LED amenity lighting also provides greater visibility of the charging bays and surrounding areas.

This future-proof OCPP compliant pedestal can offer a simple plug & charge or pay-to-charge solution via the EV driver's smartphone and/or RFID card/fob through any chosen OCPP back-office management system.

Feature-rich, this EV charger supports dynamic load balancing and is equipped with PME fault detection, so there is no requirement for an earth rod, reducing installation costs.

Available in 1way or 2way versions, providing up to 22kW superfast charging.

# Product features

- Plug & go, app, contactless payment (model dependant), or RFID controlled charging
- Choose from 1x or 2x universal charging socket(s)
- Up to 7.4kW or 22kW charging output(s)
- PME fault detection (no earth rod required)
- Supports dynamic load balancing & static load management
- OCPP 1.6 compliant (integrates with any chargepoint management system)
- Over-the-air firmware / software updates
- Built-in AC overload & fault current protection (RCBO)
- Built-in 6mA DC leakage protection
- Dual tamper and breach security notifications
- Cable lock security feature (can be permanently locked by owner)
- LED amenity lighting head (Photocell controlled)
- MID-approved energy metering
- 4G / Wi-Fi / Ethernet connectivity
- Conforms with PAS 1899 accessible charging standard (model dependant)
- Strong and durable IP54 / IK10 rated
- Surface or root mountable
- OZEV grant fundable (UK only)
- Designed & manufactured in the UK

### OCPP 1.6 compliant

Ability to integrate with any OCPP compliant chargepoint management system and app.

### Easy to operate

Three quick and easy ways to operate: mobile app, RFID cards and fobs or plug & charge.

### Funding options available

Speak to us about flexible EV infrastructure investment opportunities.

### 4G / Wi-Fi / Ethernet enabled

Complete with secure 4G, Wi-Fi and Ethernet connectivity, ensuring chargers are always online 24/7.

### Branding & colour options available

Rolec offers a bespoke chargepoint branding service; from logos & brand colours, to vinyl wraps.

### No earth rod required

Equipped with built-in PME fault detection, saving installation time and costs.

# The details

## UP TO 22kW

Available in both single phase and three phase models, providing up to 22kW superfast charging.

BASICCHARGE is compatible with all EVs & PHEVs, charging at the fastest speed possible, ensuring vehicles are ready to go in no time.

## 2 WAY CHARGING

The BASICCHARGE is available in 1way and 2way versions, allowing up to two vehicles to charge simultaneously, using just one EV charging pedestal.

The perfect EV charging pedestal solution for fleet, workplace and private car park requirements.

## ACCURATE BILLING

Built-in MID-approved energy metering ensures accurate consumption reporting, which is essential for businesses and residential car parks, wishing to bill for their usage. Use our back-office management platform to generate revenue by setting your own tariffs.

## SAFE AND SECURE

Rest assured, ROLEC's entire EV chargepoint range is fully UK Smart Charge Point Regulation compliant.

Over-the-air updates allow the chargers to receive the very latest features, ensuring a safe and future-proof product 24/7.

## 3 YEAR WARRANTY

ROLEC EV chargepoints are designed, developed and manufactured in the UK and come with a 3 year warranty included as standard, for added peace of mind on your investment.

# Specifications

## Product Overview

| | Connection Type | Charging Output | Input Supply | Unit Colour | Additional Features | Product Code |
|---|---|---|---|---|---|---|
| Single Phase Units | 1x Universal charging socket | Up to 7.4kW (32A) | 1x Up to 32A Single Phase* 230V AC (±10 %) 50/60Hz | Black | Contactless payment terminal | ROLEC1511B |
| | | | | | None | ROLEC0211B |
| | 2x Universal charging sockets | Up to 7.4kW (32A) per socket | 1x Up to 63A Single Phase* 230V AC (±10 %) 50/60Hz | Black | Contactless payment terminal | ROLEC1521B |
| | | | | | None | ROLEC0221B |
| Three Phase Units | 1x Universal charging socket | Up to 22kW (32A) | 1x Up to 32A Three Phase* 400V AC (±10 %) 50/60Hz | Black | Contactless payment terminal | ROLEC1513B |
| | | | | | None | ROLEC0213B |
| | 2x Universal charging sockets | Up to 22kW (32A) per socket | 1x Up to 63A Three Phase* 400V AC (±10 %) 50/60Hz | Black | Contactless payment terminal | ROLEC1523B |
| | | | | | None | ROLEC0223B |

*Should supply be limited, chargepoint(s) can be configured to any output (min. 6A)

# Specifications

## Unit Dimensions

BasicCharge standard 1way unit:

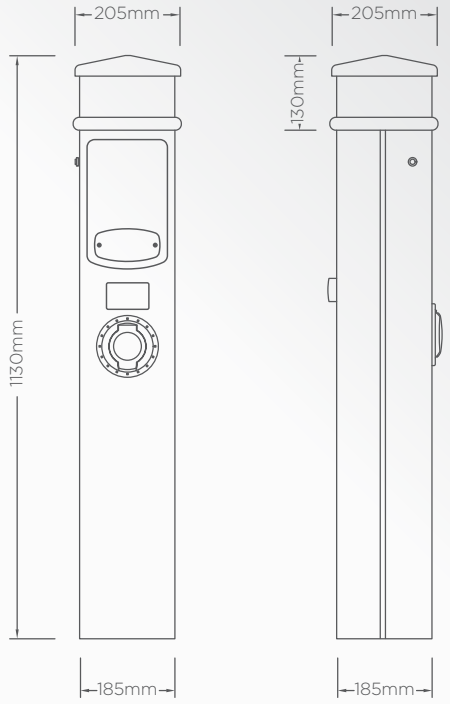


BasicCharge standard 2way unit:

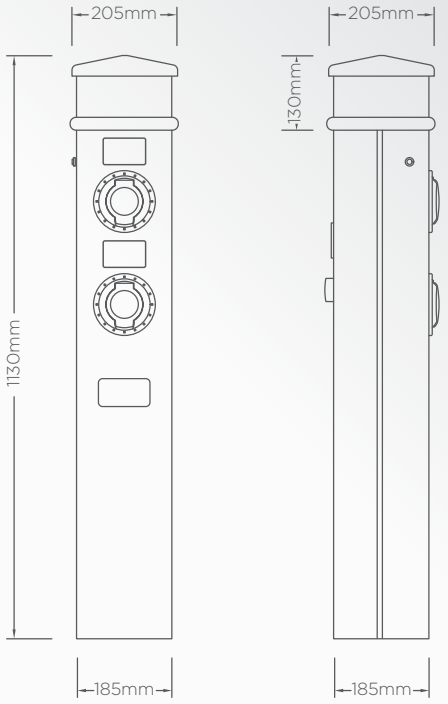


BasicCharge including contactless payment terminal:

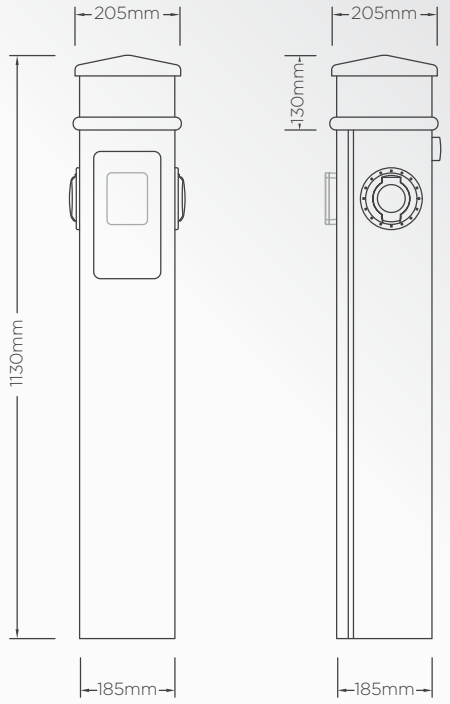


Ground mounting base:

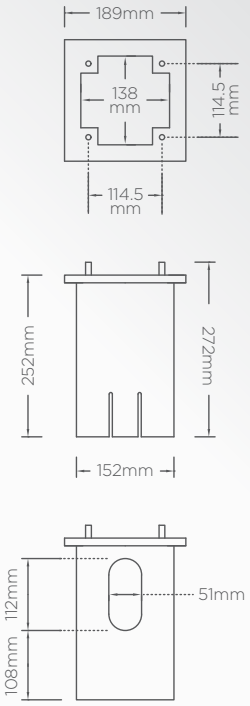

# Specifications

## Technical Data

| | |
|---|---|
| **User Interface** | • Mobile app<br>• Contactless card payment terminal (EMVCo. L1 v3.0 Certified) (model dependant)<br>• RFID reader (ISO14443 A & B (T=CL), Desfire EV2/3 & Mifare Classic protocols)<br>• NFC (ISO18092)<br>• RFID reader (MIFARE ISO/IEC 14443 A) (model dependant)<br>• Plug & go<br>• RGB LED status indicator halo(s) – configurable |
| **Charge Protocol** | Mode 3 (IEC 61851-1) |
| **Built-in Protection** | • AC overload & fault current protection – 40A 30mA Type A RCBO (per socket)<br>• DC fault protection – 6mA<br>• Lightning surge, over temperature protection<br>• PME fault detection – No earth electrode/rod required<br>• Supports automatic dynamic load balancing (may require additional hardware)<br>• Supports static load management (software configurable) |
| **Required External Protection** | • Over current protection – A suitably rated MCB or Type-A 30mA device is to be installed at source (dependent on cable type and/or route)<br>• Surge Protection – May be required depending on the installation |
| **Cable Terminals** | • Single Phase – 3x 50mm 1P + N + E<br>• Three Phase – 5x 50mm 3P + N + E |
| **Communications** | • 4G LTE Cat-1 (built-in nano SIM, subscription required)<br>  • LTE FDD: B1/B3/B5/B7/B8/B20/B28<br>  • GSM: B2/B3/B5/B8<br>• Wi-Fi 802.11 b/g/n 2.4 GHz (2412-2472 MHz / 2422-2462 MHz)<br>• NFC 13.56 MHz<br>• RJ45 Ethernet connection<br>• Bluetooth Low Energy (BLE 4.1) 2402-2480 MHz (for installer configuration purposes)<br>• OCPP 1.6J<br>• Cyber security – Data encryption level TLS 1.2 |
| **Energy Metering** | Integrated Class 1 MID compliant metering |
| **Amenity Lighting** | • 360° Low energy LED<br>• Rating – 2x G9 2.3W LED, 230-240V AC<br>• Colour temperature – 5000k<br>• Protection – 6A 30mA Type A RCBO |
| **Standby Power Consumption** | • Charging circuits – < 7.5W (per socket)<br>• Panel heater – 8W<br>• Lighting – 4.6W |
| **Dimensions** | 205mm x 1130mm x 205mm (W x H x D) |
| **Weight** | < 15kg (model dependant) |
| **Environmental** | • Ingress protection – Enclosure IP65, Socket IP54<br>• Impact protection – IK10<br>• Security – Dual tamper and breach notifications<br>• Operating temperature – -30°C to +50°C<br>• Operating humidity – 5% to 95% |
| **Materials** | • Substructure – Hot-dipped Galvanised Steel<br>• Panels – 3.2mm Aluminium composite<br>Heavy duty 1.5mm Steel applied with 45–55 microns of Zinc primer (models with contactless payment terminal)<br>• Lens – High impact resistant 3mm Polycarbonate<br>• Lid/collar – ABS Granulate Natural Polyethylene |
| **Unit Colour** | ● Black ● ○ Grey & White (model dependent) Other colours available upon request |
| **Certifications & Compliances** | • EV Charging Compliance – EN 61851-1:2019, EN 61851-22:2002<br>• Smart Charge Points – (SI 2021/1467)<br>• Wiring Regulations – BS 7671:2018+A2:2022<br>• EMC Compliance – EN 61000-6-3:2007+A1:2011, EN 61000-6-2:2005, 2014/30 /EU, SI 2016/1091, (EN 301 489-1 V1.9.2, EN 301 489-3 V2.1.1, EN 301 489-17 V1.3.1, EN 301 489-19 V2.1.1, EN 301 489-52 v1.1.0)[P]<br>• Safety Compliance (LVD) – EN 62368-1:2014, 2014/35/EU, SI 2016/1101, EN 60950-22:2006[P]<br>• Communications / RED – EN 62311:2008, 2014/53/EU, SI 2017/1206, EN 300 330 V2.1.1 (2017-02), EN 301 908-1 V15.1.1 (2021-09), EN 301 908-13 V13.2.1 (2022-02), EN 301 511 V12.5.1 (2017-03), EN 300 328 V2.2.2 (2019-07), EN 300 440 V2.2.1 (2018-07), (EN 301 908-2 V13.1.1, EN 303 413 V1.1.1)[P]<br>• Environmental Protection – BS EN 60529:1992+A2:2013<br>• Impact Rating – BS EN 62262:2002+A1:2021<br>• Metering – 2014/32/EU, SI 2016/1153<br>• Accessibility – PAS 1899 accessible charging standard (model dependent)<br>• RoHS – 2011/65/EU, SI 2012/3032<br>• REACH – 1907/2006, REACH etc. (Amendment) Regulations 2021<br>• Payter Payment Device – CE, FCC, RoHS, WEEE , REACH, EMVCo, PCI-PTS 6.x, TQM, MasterCard, VISA, American Express, Discover, Diners [P]<br>• Certification Markings – CE & UKCA |
| **Warranty** | 3 years |



[P] Payment Terminal Additional Compliances – where fitted

# Options & accessories

| Product Code | Item Description |
|---|---|
| RFID0010 | RFID card |
| RFID0020 | RFID fob |
| GMCP0010 | Ground mounting base for BasicCharge pedestal |
| EVCB0020 | Root mount protection barrier – 48mm |
| EVCB0040 | Surface mount protection barrier – 48mm |
| EVPS0010 | EV parking sign – A4 landscape<br>(Other sizes are available) |
| ROLEC5000 | TAP & CHARGE remote payment terminal |
| EVPP0100 | 5m 32A Type 2 to Type 2 charging cable |
| EVPP0107 | 10m 32A Type 2 to Type 2 charging cable |
| EVPP0105 | 5m 32A Three phase Type 2 to Type 2 charging cable |
| EVPP0108 | 10m 32A Three phase Type 2 to Type 2 charging cable |
| | (Other cables are available, including Type 1 options) |
| ACSR0525 | Perific Max Fuse Protection Device with 3x 900A up to 36mm² Current Sensors |
| ACSR0535 | Perific Max Fuse Protection Device with 3x 900A up to 100mm² Current Sensors |
| ACSR0545 | Perific Max LAN Accessory Input Kit |
| ACSR0125-F | 100A up to 35mm² screened CT clamp with 10m cable & connector |

GMCP0010

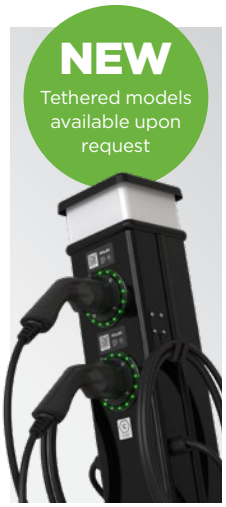

RFID0020

ACSR0535

EVCB0040

EVPP0100

## TAP & CHARGE

**Remote payment terminal**

Hassle-free transactions across multiple EV chargers. Ideal solution for commercial and public locations.

ROLEC5000

## Branding & colour options available

ROLEC offer a bespoke chargepoint branding service; from logos & brand colours, to vinyl wraps. This can be arranged at time of order. Contact ROLEC for details.

Brand names, logos and trademarks used herein remain the property of their respective owners. This listing of any firm or their logos is not intended to imply any endorsement or direct affiliation with Rolec Services Ltd. and is purely to demonstrate branding opportunities.

# Chargepoint management & operation

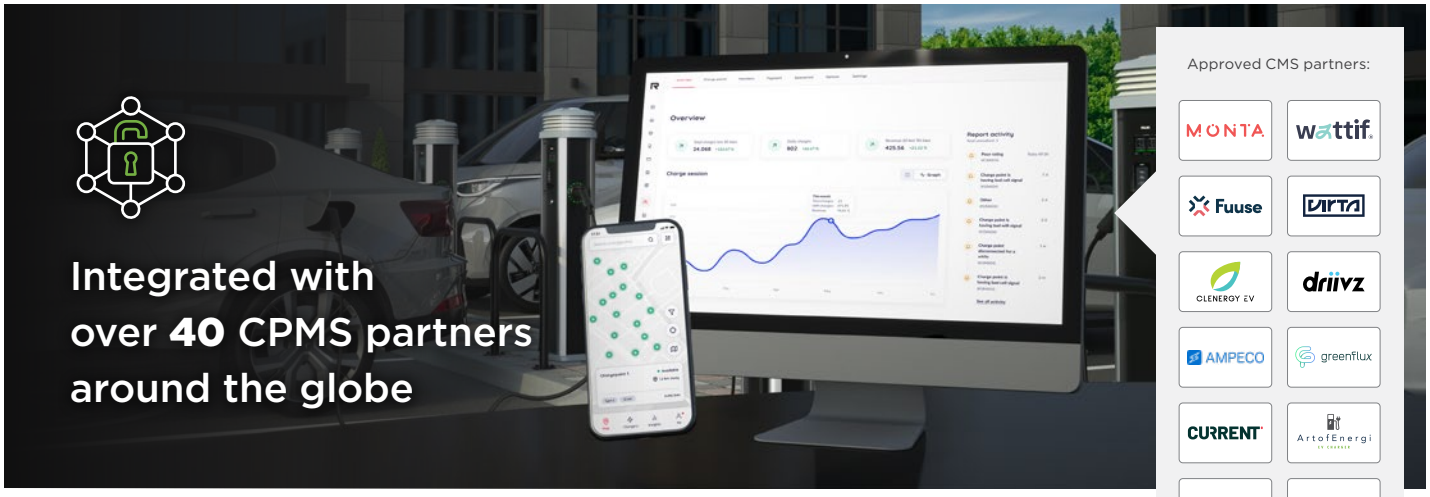


Approved CMS partners:

MONTA, wattif, Fuuse, VIRTA, CLENERGY EV, driivz, AMPECO, greenflux, CURRENT, ArtofEnergi, connekt, Spirii, ROAM, nor+he, STUART ENERGY, wevo, ChargePanel, MOBILITY 46, RE&GO, + many more

## Chargepoint operators

ROLEC EV chargepoints boast an array of intelligent features. When combined with any approved OCPP compliant chargepoint management system (CPMS), chargepoint operators will have the ability to deploy and self-manage their own public and/or private EV charging network. Ideal for workplace, fleet, commercial and residential locations.

- **Businesses can easily manage their own network of chargepoints**
- **Conveniently set chargers to be private or publicly accessible**
- **Offer pay-to-charge solutions and benefit from generating additional revenue**
- **Set custom & flexible tariffs for different customer or charger groups**
- **Access advanced features including dynamic load management (DLM)**
- **Users can operate chargepoints via mobile app, RFID, contactless payment (model dependent), or a remote contactless payment terminal (contact ROLEC for more information about the TAP & CHARGE solution)**
- **24/7 support for users and operators of the chargepoints**

**NEED ADVICE?**

Speak to a member of the team to find the right solution for you

## Chargepoint users

Take full control of your EV charging experience and maximise the intelligent features of the chargepoint management system.

- **Remotely control your home EV charging via mobile app**
- **Prioritise lower costs, lower $CO_2$ or only using renewable energy**
- **Schedule charges so your car is ready when you are**
- **Easily locate and navigate to public chargepoints via the road map**
- **24/7 support for help when you need it most**

**Please Note:** All chargepoint management and operation features are subject to the specified CPMS

THIS DOCUMENT CONTAINS INFORMATION THAT IS SUBJECT TO CHANGE WITHOUT NOTICE.

The latest version of this publication can be downloaded at www.rolecserv.com/downloads-ev-charging

Illustrations of the product and user interface are for marketing purposes only.

Brand names, logos and trademarks used herein remain the property of their respective owners.
This listing of any firm or their logos is not intended to imply any endorsement or direct affiliation
with Rolec Services Ltd. and is purely to demonstrate branding opportunities.

© 2025 by Rolec Services Ltd. All rights reserved.

EVBD-V03-R0 BasicCharge Data Sheet

Designed &
Manufactured
in the UK

ROLEC

t: 01205 724754
e: enquiries@rolecserv.co.uk

www.rolecserv.com