arbtech

Arboricultural Method Statement to BS5837:2012

Mr Dwayne Campbell.

91 Buckingham Road,
Manchester,
M21 0QT.

27 November 2025

Alan Thompson FdSc (Arb) MArborA

Table of Contents

If this report has been released electronically the appendices referred to herein can be found in the annexed zip folder/s as .pdf files. If this report has been released in hard copy the appendices will be bound into the back of this report. Plans are annexed separately as A0, A1, A2 or A3 as appropriate.

Introduction 3
Executive Summary 4
General Information 5
Tree Survey 6
Arboricultural Impact Assessment 7
Arboricultural Method Statement 9
- Tree Works 10
- Protected Species 11
- Site Management 13
- Prohibition 14
- Sequencing of works 15
- Protective Measures 16
- Demolition 19
- Construction 20
- Services 21
- Landscaping 23
- Monitoring and Supervision 24

Appendix 1: Tree Survey Schedule 26
Appendix 2: Tree Protection Notice 29
Appendix 3: Contact Details 31
Document Production Record 32

Introduction

Arbtech Consulting Limited (Arbtech) received written instruction in October 2022 from Mr Dwayne Campbell to attend 91 Buckingham Road, Manchester, M21 0QT (site) to undertake an arboricultural survey a to BS5837:2012 guidance to assess trees, hedges and major shrub groups growing on and within influencing distance of the site and to produce a Schedule of trees, Tree Constraints Plan, Arboricultural Method Statement and Tree Protection Plan.

Site location

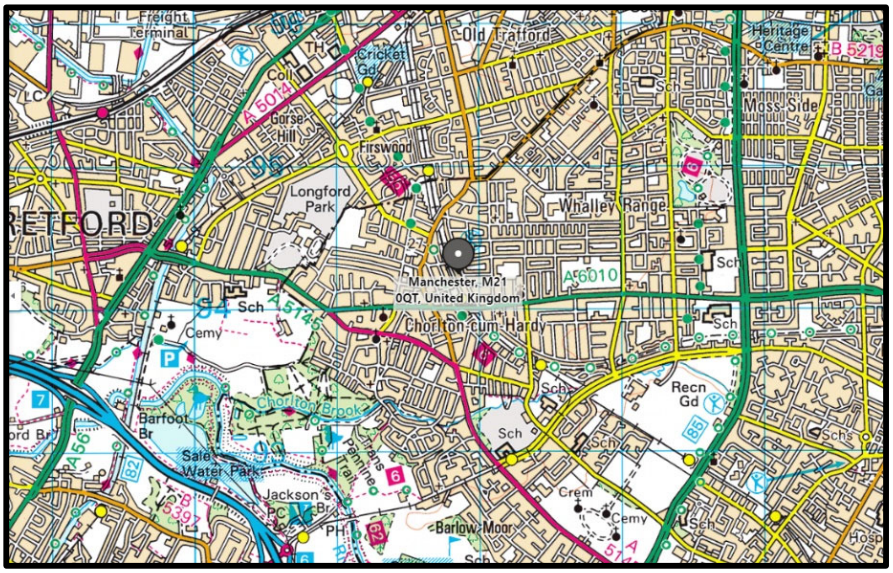

Figure 1: OS Map (Bing Maps)

Figure 2: Aerial Image of site (Google Maps)

Executive Summary

This report describes the extent and effect of the proposed development at the site on individual trees and groups of trees within and adjacent to the site.

Trees within the site were surveyed; using a methodology guided by British Standard 5837:2012 'Trees in relation to design, demolition and construction – Recommendations' ("BS5837").

Subsequently, this report has been produced, balancing the layout of the proposed development against the competing needs of trees. This report comprises all of the requisite elements of an arboricultural implications assessment, method statement and supporting plans.

Checklist for Submission to Local Planning Authority

Tree survey	☒
Tree constraints plan	☒
Arboricultural method statement	☒
Tree protection plan	☒

This report and its appendices follow precisely the strategy for arboricultural appraisal intended to provide local planning authorities with evidence that trees have been properly considered throughout the development process.

Proposal

General Information

Client: Mr Dwayne Campbell.

Site: 91 Buckingham Road, Manchester, M21 0QT

Brief proposal description: Construction of garden residential annexe & garden office.

Table 1: Documents referred to.

Document	Reference No.
Survey Base Plan	Ordnance Survey Tile
Proposed layout drawing	Campbell-06-Rev A
Landscape master plan drawing	N/A
LPA pre-app comments	N/A
British Standard 5837:2012	“BS5837”
Tree Protection Plan	Arbtech TPP 01

Tree Survey

Survey: An arboricultural survey to BS5837 of all trees within impacting distance of the site was undertaken by Alan Thompson of Arbtech Consulting on 4th November 2022.

A total of 3 No. individual trees and 3 No. groups of trees were surveyed. Details for each of the trees surveyed are provided in the Schedule of Trees (see Appendix 1)

Table 2: Documents upon which this tree survey has been based

Document	Originator	Reference Number	Title
Survey Base Drawing	AJ Architectural Ltd	04-A	Existing Site Layout

Limitations: The survey was made at ground level using visual observation only. Detailed examinations, such as climbing inspections and decay detection equipment were not employed, though may form part of the survey's management recommendations. Measurements were taken using specialist tapes, laser and GPS devices. Where this was not possible, measurements are estimated.

Scope: Pre-development tree surveys make arboricultural management recommendations based exclusively upon the individual tree or group of trees condition relative to their present context (*i.e. not in relation to the proposed development*).

Legal Status: No statutory protection check has been performed. BS5837 does not draw any distinction between trees subject to statutory protection, such as a Tree Preservation Order ("TPO"), and those trees without. This is principally because a detailed planning consent overrides any TPO protection. Consequently, we do not seek to offer any comparison between or infer any difference in the quality or importance of TPO trees and other trees.

* For more information on the surveyed trees please see Arbtech Consulting Ltd, Tree Survey Schedule (Appendix 1), Tree Survey Report and Tree Constraints Plan.

Arboricultural Impact Assessment

Table 3: Documents upon which this assessment has been based

Document	Originator	Reference Number	Title
Survey Base Drawing	AJ Architectural Ltd	04-A	Existing Site Layout
Proposals	AJ Architectural Ltd	Campbell 06-Rev A	Proposed Site Plan

There are a number of issues that may need to be addressed in an arboricultural impact assessment between the trees and the proposed development, these are as follows:

- The effect and extent of the proposed development within the root protection areas (RPAs) of retained trees;
- The potential conflicts of the proposed development with canopies of retained trees; and
- The likelihood of any future remedial works to retained trees beyond which would have been scheduled as a part of usual management.

Table 4: Impacts upon the RPAs of retained trees

Tree Number	Species	Structure	Incursion
G1	Leyland cypress	Garden annexe, garden office & footpath	RPA
T1	Oak	Garden office	RPA
T2	Leyland cypress	Garden office	RPA

These impacts can be seen on the Arboricultural Impact Assessment drawing number Arbtech AIA 01.

Trees to be removed

The proposal requires the removal of 1 No. category C tree and one No. category B tree which forms part of group G1.

A breakdown of all removals and pruning works can be seen in Table 8: Summary of Tree Works

Table 5: Number of individual trees to be removed.

U	A	B	C
0	0	0	1

Table 6: Number of groups to be removed. () Represents partial removal of group.

U	A	B	C
0	0	0 (1)	0

Mitigation replacement tree planting of a Sorbus aucuparia 'Fastigiata' Heavy Std 8-10 cm Girth, will form part of the landscape proposal for the development.

Arboricultural Method Statement

The purpose of this method statement is to demonstrate how any aspect of the development that has potential to result in loss or damage to a tree may be implemented and provide an adequate level of protection for those trees that are to be retained during the proposed works.

Details of key site personnel, including site / project manager will be submitted to the Council's Tree Officer prior to the commencement of site works.

This method statement is to be approved and agreed to in writing by all key personnel prior to the commencement of site works.

No site personnel are to be present and no demolition, site clearance, building work or delivery of materials is to occur until the protective measures are in accordance with this method statement and the Tree Protection Plan drawing number Arbtech TPP 01.

Protective measures should be in accordance with this method statement and the Tree Protection Plan; drawing number Arbtech TPP 01 will remain unaltered and in situ, unless otherwise specified, for the entire duration of the construction.

Table 7: Documents upon which this assessment has been based

Document	Originator	Reference Number	Title
Survey Base Drawing	AJ Architectural Ltd	04-A	Existing Site Layout
Proposals	AJ Architectural Ltd	Campbell 06-Rev A	Proposed Site Plan

Tree Works

For reasons of public safety, all tree works referred to herein must be carried out prior to any site personnel commencing works or any building materials being delivered.

Table 8: Summary of Tree Works

No.	Species	Works	Category
G1	Leyland cypress	Prune canopy to give 1m clearance from the proposed garden office.	B2
G1	Leyland cypress	Removal of tree from group with heavy lean, as shown below	B2
T2	Leyland cypress	Prune canopy to give 1m clearance from the proposed garden office.	B2
T3	Cordyline	Fell to ground level; remove stumps.	C1

Notes All tree work is to be undertaken in accordance with British Standard BS 3998:2010, Recommendations for tree work. All arising's are to be removed and the site is to be left as found. Care is to be taken of the ground around retained trees to make sure that it does not become compacted as a result of tree surgery operations. No equipment or vehicles such as timber Lorries, tractors, excavators or cranes shall be parked or driven beneath the crowns of any retained trees, to prevent subsequent compaction and root death.

Tree with lean from group G1 to be removed

Protected Species

Conservation Status of British Bats

The general consensus in Britain and Europe is that virtually all bat species are declining and vulnerable. Our understanding of population status is poor as there is very little historical data for most bat species. Certain species, such as the horseshoe bats, are better understood and have well documented contractions in range and population size.

Given this general picture of decline in UK Government within the UK Biodiversity Action Plan has designated five species of bats as priority species (greater and lesser horseshoe bats, barbastelle, Bechstein's and pipistrelle). These plans provide an action pathway whereby the maintenance and restoration of the former populations levels are investigated.

Legal Status of British Bats

Given the above position all British bats as well as their breeding sites and resting places enjoy national and international protection.

All bat species in the UK are fully protected under the Wildlife and Countryside Act 1981 (as amended) through inclusion in Schedule 5. All bats are also listed on Annex IV (and some on Annex II) of the EC Habitats Directive giving further, European protection. Taken together the act and Conservation of Habitats and Species Regulations 2012 (as amended)* make it an offence to; intentionally or deliberately kill, injure or capture (take) bats;

- Deliberately disturb bats (whether in a roost or not);
- Damage, destroy or obstruct access to bat roosts;
- Possess or transport a bat or any part of a bat, unless acquired legally;
- Sell, barter or exchange bats, or parts of bats

The legislation although not strictly affording protection to foraging grounds does protect roost sites. Bat roosts are protected at all times of the year whether or not bats are present. Any disturbance of a roost due to development must be licenced.

**the regulations that delivered by the UK's commitments to the Habitats Directive.*

Breeding birds

All nesting birds are protected under the Wildlife and Countryside Act (as amended) 1981, which makes it an offence to intentionally kill, injure or take any wild bird or take, damage or destroy its nest whilst in use or being built, or take or destroy its eggs. Furthermore a number of birds enjoy further protection under that Act and are listed on Schedule 1 of the Act. These further protected birds are also protected from disturbance and it may be necessary to operate “no-go” buffer zones around such nests – typically out to 100m.

Planning policy guidance on the treatment of species identified as priorities under the biodiversity action programme suggests that local authorities should take measures to protect the habitats of these species from further decline through policies in local development documents and should ensure that they are protected from the adverse effects of development, where appropriate, by using planning conditions or obligations. The conservation of these species should be promoted through the incorporation of beneficial biodiversity designs within developments.

Site Management

The site manager will be responsible for briefing and inducting all personnel who will be working on any stage of this development and especially those who will be working within or adjacent to the canopies or RPAs of retained trees; and will make them aware of, and provide a copy of this method statement and tree protection plan drawing number Arbtech TPP 01; this is to include but not exclusively of the movement and or operation of plant, excavations, unloading deliveries, mixing and or pouring of cement and concrete.

The site manager will be responsible for the day to day running and protection of all retained trees and for liaising with the project arborist about any tree related matters and prior to any works that may or will affect the RPAs or canopies of retained trees; this is to include but not exclusively the movement and or operation of plant, excavations, unloading deliveries, mixing, pouring and storage of all caustic materials that may cause harm to retained trees.

Any incidents of damage to retained trees or of tree protection measures will be documented by the site manager who will then report these incidents to the project arboriculturist immediately and make sure that works within this area cease until the project arborist has had an opportunity to inspect the damage and where appropriate, agree a mitigation plan with the local planning authority tree officer.

The site manager may designate another person to take charge of briefing and inducting process of new site personnel or visitors in his absence.

If the site manager is replaced or is absent from site for more than three consecutive working days the project arborist will be informed and a pre-start meeting will be held with the new or acting site manager.

It is the responsibility of the site manager to ensure that the planning conditions attached to the planning consent are adhered to at all times and that a monitoring regime and supervision of any works within or adjacent to the RPAs are adopted.

If at any time pruning works are required other than those previously approved, permission must be sought from the LPA tree officer and once permission is granted they are to be carried out by a suitably qualified person in accordance with BS3998:2010 Tree work – Recommendations.

Prohibition

- Mechanical digging or scraping is not permitted within a defined root protection area or within areas cordoned off by protective barrier fencing.
- No access will be permitted within the protected areas;
- No materials, equipment or debris will be stored within any of the fenced areas, or against the fencing;
- Fires are not permitted within 10m of any vegetation.
- Leaning objects against or attaching of objects to a tree is not permitted.
- Machinery, plant and vehicles are not permitted to be washed down within 10m of vegetation.
- Chemicals and materials are not to be transported, stored, used or mixed within a root protection area or within areas cordoned off by protective barrier fencing.
- Cement silos, mixing site to be situated within a bunded area to prevent pillage/leaking of chemicals harmful to trees. These areas are to be sited well clear of protected trees.
- Refuelling of plant or machinery is prohibited within 10m of the construction exclusion zones.
- It is essential that allowance should be made for the slope of the ground so that damaging materials such as concrete washings, mortar or diesel oil cannot run towards trees.
- Where machinery is to be used within 5m of retained tree canopies a banks man will be required at all times whilst setting up, moving or operating within this distance of retained trees canopies.
- Storage of all caustic material and chemicals are to be situated well clear of protected areas and preferably on lower ground if slopes are present, or to be situated within a bonded area to prevent any spills or leaks entering the ground.

Sequencing of works

A logical sequence of events is to be observed and shall be phased as follows.

Table 9: Sequence of Events

Stage	Event
Stage 1	Pre-commencement site meeting
Stage 2	Carry out tree works as specified within the summary of tree works
Stage 3	Installation of protective measures in accordance with the approved tree protection plan/s
Stage 4	Site set up for construction
Stage 5	Undertake and complete construction works
Stage 6	Undertake external landscaping works outside of the construction exclusion zones
Stage 7	Removal of all machinery and materials form site
Stage 8	Dismantle and removal of protective measures
Stage 9	Undertake external landscaping works within the construction exclusion zones
Stage 10	Sign off from project arboriculturist

Protective Measures

Protective measures are to be installed immediately following the completion of the tree works, and are to be sited and aligned in accordance with the tree protection plan (Arbtech TPP 01) prior to the commencement of any works or the introduction of any machinery or material to site.

Upon installation of the protective measures around the retained trees the project arboriculturist will visit the site to inspect and document the position and specifications of the protective measures.

In the event that the protective measures and their positions do not comply with this arboricultural method statement document number Arbtech AMS 01 (27-11-25) and tree protection plan drawing number Arbtech TPP 01, the project arboriculturist shall inform the client and fencing contractor so adjustments can be made.

When the protective measures comply with document number Arbtech AMS 01 (27-11-25) and tree protection plan drawing number Arbtech TPP 01, the project arboriculturist will sign off the protective measures in writing to the client and will send a copy to the fencing contractor, site agent and local authority tree officer.

If the protective measures become damaged or there is any accident or emergencies involving trees, these areas are to be cordoned off immediately with high visibility plastic mesh fencing. The site agent is to photograph and document the damage and inform the project arboriculturist immediately after the incident and all work within in this area is to cease until the project arboriculturist has made a visit to the site. Any and all damaged sections of protective measures shall be replaced within 48 hours of the initial incident.

The protected area is sacrosanct and will not be invaded by the storage of materials, mixing of concrete or other products, accessed by machinery, equipment or pedestrians or in any other way disturbed by construction activity.

The protective measures will remain in place until the completion of stage 8 (see Sequencing of Works), thereafter they will be carefully dismantled only with the agreement of the project arboriculturist and or the local authority tree officer.

The existing site boundary measures are to be retained for the duration of the development. If for any reason the existing boundary measures are not to be used protective barrier fencing is to be installed along the line of the boundaries and is only to be removed upon the written permission of the project arboriculturist or LPA tree officer upon the completion of the development or immediately prior to the installation of the permanent boundary measures.

No equipment, vehicles or plant shall operate beyond the tree protection fencing. Booms, hoists and rigs should be kept as far away from the canopies of retained trees at all times. Where it is necessary to operate within 5m of a tree canopy, it will be done with the utmost caution and under the control of a banks man. Damage to trees will be considered a breach of this tree protection plan, which in turn could be a breach of planning permission.

Protective Barrier Fencing

Protective barrier fencing should be appropriate for the intensity and proximity of the development to protect trees where development activity is in proximity.

Specification: To comprise of 2m tall, welded mesh panels on rubber or concrete feet. Panels are to be joined together using a minimum of two anti-tamper couplers, installed so that they can only be removed from inside the fence. The panels should be supported on the inner side by stabiliser struts, which should be attached to a base plate and secured with ground pins.

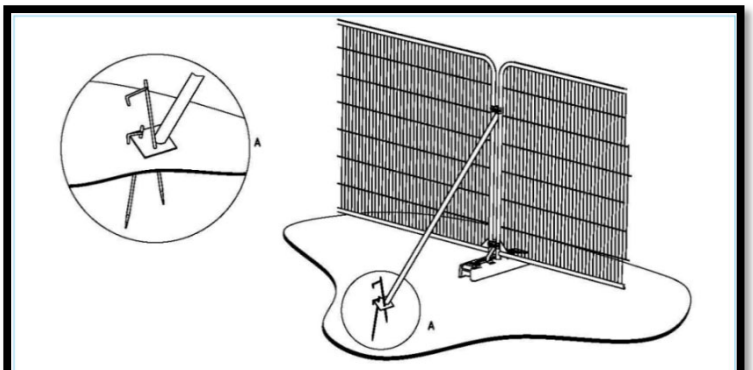

a) Stabilizer strut with base plate secured with ground pins

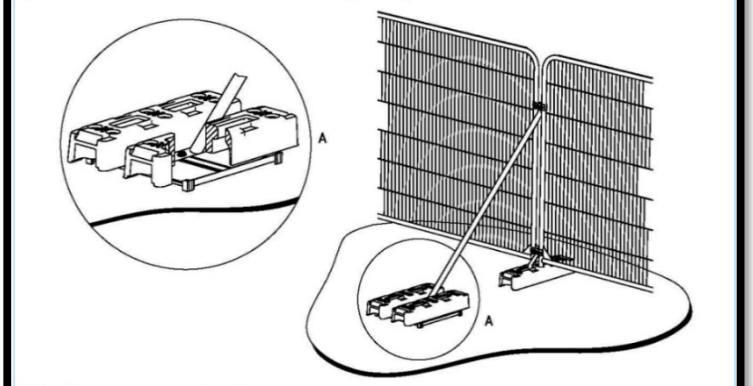

b) Stabilizer strut mounted on block tray

Signage denoting the words "*tree protection area*" at 5.0m intervals should be fixed to the protective barrier fencing (See Appendix 2). Protective fencing is to be removed only with the written permission of the arboricultural consultant and approval of the local planning authority (LPA).

Ground boarding

New temporary ground protection should be capable of supporting any traffic entering or using the site without being distorted or causing compaction of underlying soil.

Where it is determined by the project engineer that the any hard surfacing is not adequate protection from any expected loading, ground boarding is to be installed to the engineer's specification on top of the hard surfacing within the root protection areas of retained trees.

Where machinery will be stored or used from the ground boarding within the RPAs of the retained trees an impervious barrier and or bunding to prevent oils, fuel or chemicals is to be installed to prevent leaching into the soil within or adjacent to the RPAs.

Note The ground protection might comprise of one of the following:

a) for pedestrian movements only, a single thickness of scaffold boards placed either on top of a driven scaffold frame, as to form a suspended walkway, or on top of a compression-resistant layer (e.g. 100mm depth of woodchip), laid onto a geotextile membrane;

b) for pedestrian-operated plant up to a gross weight of 2t, proprietary inter-linked ground protection boards placed on top of a compression-resistant layer (e.g. 150mm depth of woodchip), laid onto a geotextile membrane;

For any situations other than those described in a) or b) (as above), the ground boarding is to be designed by a suitably qualified person to an engineering specification in conjunction with arboricultural advice, to be suitable of supporting the expected loading to be placed upon it.

In all cases, the objective of the ground boarding is to avoid compaction of the soil beneath, so that tree root functions remain unimpaired.

Demolition

Prior to the demolition of the existing site features, all tree works are to have been completed, tree protection measures are to be in place as per Arbtech Consulting Ltd. tree protection plan document number Arbtech TPP 01 and have been signed off and a copy of the demolition method statement has been submitted and approved by the project arboriculturist and LPA tree officer, to ensure that there is no conflict with this method statement.

Any demolition work within or immediately adjacent to RPAs or canopies of retained trees is to be undertaken under the direct on-site supervision of an arboriculturist.

Construction

Prior to the construction of the proposal, a copy of the construction method statement should have been submitted and approved by the project arboriculturist and LPA tree officer, to ensure that there is no conflict with this method statement.

Any excavations and construction work within or immediately adjacent to RPAs or canopies of retained trees is to be undertaken under the direct on-site supervision of an arboriculturist.

Supervised Excavation

Excavation is required for the garden annexe and footpath within the RPA of tree T1, this will be carried out under direct on-site arboricultural supervision to the required depth of the excavation.

The soil is to be loosened with the aid of a fork or pick axe and then cleared with the aid of an Air-spade, Air-vac and or shovel. Any roots found will be cleanly severed by the arboricultural consultant with either a hand saw or secateurs.

Any roots found with a diameter of less than 25mm shall be cleanly severed by the arboricultural consultant. Any roots of 25mm and above shall be excavated around without damaging them; the arboricultural consultant shall decide if it's feasible or necessary to retain the root, if not it shall be severed.

The edge of the excavation closest to the trees will be covered with damp hessian to prevent soil collapse or contamination by concrete.

Garden office

New foundations for the proposed garden office are situated within the RPAs of trees T1, T2 & G1 have been designed in conjunction with arboricultural advice to accommodate the likely loading of the structure.

The use of strip/trench foundations within RPAs of retained trees can cause extensive root loss and as such are being avoided.

The garden office foundations are a proposed raft/slab foundation which is to be constructed & installed entirely above the existing soil level.

Services

Detailed drawings of proposed underground services are not available at this time; hence it is not possible to identify any specific potential impacts associated with the scheme at this stage.

Existing services within the site should be retained wherever possible. Where existing services within RPAs require upgrading, the upmost care must be taken to minimise disturbance, and where feasible trenchless techniques are to be employed, and only where necessary should open excavations be considered.

Where new services are to be introduced into the site they should be located outside of RPAs, where they will not interfere with tree roots. If any excavations are required within the RPAs all trenches are to be excavated by hand and radially to the tree trunks under direct on-site arboricultural supervision and are to be carried out under NJUG guidelines.

Final positions of any proposed services should be verified and approved by the arboricultural consultant and local authority tree officer before implementation.

New Underground services

Trenching for installation of underground services and drainage routes could sever any roots that may be present and as such adversely affects the health of the tree. For this reason particular care should be taken in routing and methods of installation of all underground services. All underground services and drainage routes should be located so that no excavations are required within RPAs.
Where it has been impossible to keep underground services from passing through RPAs or within close proximity to trees, these sections are to be installed in one of three ways in accordance with the guidance set out in National Joint Utilities Group guidelines (NJUG 4), under on site arboricultural supervision.

Trenchless Techniques

There are three main types of trenchless techniques, these include, guided and unguided boring and pipe replacement by lining or bursting. These allow for the installation, maintenance or renewal of underground services, without the disturbance of soil in which roots are likely to be growing. Starting and receiving pits for the boring machinery are to be located outside of the RPAs of any retained trees, with the bore depth being maintained at a minimum depth of 600mm below the existing ground level. Techniques involving external lubrication of the equipment shall use no material other than water as other lubricants could contaminate the soil (e.g. oil, bentonite, etc.).

Broken Trench – Hand Dug

This technique combines both trenchless techniques and manual excavation where excavation is unavoidable. Excavations should be limited to where there is clear access around and below the roots. All trenches shall be excavated by hand with the same precautions taken as for manual excavation. Open section of trench should only be large enough to allow access for linking to the next section.

Landscaping

Any tree planting should take into consideration the available space for tree growth and development in order to ensure the trees are physically suited to the site at maturity. A specification for and notation relating to the precise alignment of replacement trees will be contained in the landscape proposals.

Landscaping around retained trees may only be carried out once all tree protection measures have been removed (planting, turfing, fencing etc.).

All excavations within the Root Protection Areas shall be undertaken by hand and without reducing current ground levels unless it is agreed in writing with the LPA. At no time is the use of a rotavator permitted within the RPAs of retained tree.

Any tree roots discovered will be left in-situ and shall not be cut or otherwise damaged. Where possible, the soil structure within the Root Protection area shall be preserved.

No works will be carried out within the RPAs of any trees if the soil moisture is of such a level that soil compaction may be likely. Should the soil become compacted or has poor structure which would hinder the development of the existing trees and plants or any new plantings the arboriculturist should be consulted about soil decompaction techniques.

Monitoring and Supervision

Where trees have been identified within this method statement and tree protection plan drawing number Arbtech TPP 01 for retention, there should be an auditable system of arboricultural monitoring. This is to extend to arboricultural supervision whenever demolition or construction activity is to take place within or adjacent to any canopy or RPA.

The development's tree protection measures are to be monitored and all demolition and construction works to be undertaken within or adjacent to the RPAs of retained trees are to be supervised by project arboriculturist, who should be retained to record and report observations to the council at appropriate intervals.

Pre-commencement site meeting

Prior to the commencement of any works or machinery and materials arriving on site a pre-commencement site meeting involving the project arborist, landowner or agent, site manager, contractors and engineer (as appropriate) and the relevant LPA officers will be held to ensure that all aspects of the arboricultural method statement and tree protection are understood and for all parties to swap contact details (see Appendix 3).

Monitoring and supervision schedule

The initial monitoring visit will be to check that the tree protective measures are in the correct location and as specified within the approved method statement; if so to sign off their installation.

There after monitoring visits are to take place at regular intervals, to ensure that tree protection measures are in place and are functioning as designed or whenever necessary to undertake works to be carried out under arboricultural supervision. The frequency of the monitoring visits is to be determined with the LPA tree officer at the pre-commencement site meeting.

A record of all arboricultural monitoring and supervision visits will be kept and any faults will be logged, this will then be copied to the site agent, developer and local planning authority in a digital format.

If during the course of the development it is necessary for areas to be re-designed so that they would require changes to the approved arboricultural method statement or tree protection plan and so affecting retained trees the project arborist and LPA tree officer will be invited to attend a site meeting with all relevant parties. Prior to any changes being implemented these must have been approved in writing by the LPA tree officer.

Supervision

The arboricultural consultant will be required to attend site to directly supervise all demolition and construction works that are to be undertaken within or adjacent to the RPAs of all retained trees and will be advised a minimum of 72 hours prior to the commencement of any works that require his attendance, these will include:

1. Pre-commencement site meeting & location of protective measures.
2. Supervised excavations within the RPA of tree no. T01
3. Installation of raft foundation above the RPAs of trees T01, T02 & group G03.
4. Any demolition and or excavations within or adjacent to RPAs, including foundations, hard surfacing or underground services (a non-exhaustive list).

Completion meeting

Once all construction works have been completed all materials and machinery has been removed from site the project arborist shall be informed and will invite the LPA tree officer to meet on site to discuss the process and discuss any final remedial works that may be required and to sign the development off so that the protective measures may be removed.

Appendix 1: Tree Survey Schedule

BS5837:2012 Tree Survey

Client: Dwayne Campbell
Project: 91 Buckingham Road, Manchester, M21 0QT.
Survey Date: 04/11/2022
Surveyor: Alan Thompson

Artbech Consulting Ltd.

Unit 3, Well House Barns
Chester Road
Chester
Cheshire
CH4 0DH
Phone: 01244 66 11 70

Tree and Tag No / Species	Hght (m)	Stems No	Stems Ø (mm)	Crown Spread (m)	Crown Clear (m)	Age	RP A (m²) R (m)	Phys Condition	Structural Condition	Preliminary Recommendations / Survey Comment	Cat ERC
G1										Estimated Measurements	
Leyland Cypress *X Cupressocyparis leylandii*	13.5	1	380	N 3 E 3 S 3 W 3	1 1 1 1	SM	A: 65.3 R: 4.55	Good	C: Good S: Good B: Good	Group is comprised of four semi mature Leyland cypress trees. Measurements given are estimated averages for the group.	B.2 40+ yrs
G2										Estimated Measurements	
A Group - -	6.5	1	300	N 3 E 3 S 3 W 3	1 1 1 1	SM	A: 40.7 R: 3.59	Good	C: Good S: Good B: Good	Off site group is growing on neighbouring land. Tree were not accessible so could not be fully inspected. Group is comprised of 2 x hawthorn and 1 x elder. Measurements given are estimated averages for the group.	C.2 20+ yrs
G3										Estimated Measurements	
A Group - -	4	1	120	N 1.5 E 1.5 S 1.5 W 1.5	1 1 1 1	Y	A: 6.5 R: 1.43	Good	C: Good S: Good B: Good	Off site group is growing on adjacent tram embankment. Trees were not accessible so could not be fully inspected. Group is comprised of five young self seeded trees, species are ash, sycamore, hawthorn and birch. Measurements given are estimated averages for the group.	C.2 40+ yrs
T1										Estimated Measurements	
Common Oak *Quercus robur*	16	2	885 (Eq)	N 9 E 9 S 9 W 5	4.5 3.5 4.5 9	M	A: 354 R: 10.61	Good	C: Good S: Good B: Good	Off site tree located growing on adjacent tram embankment. Tree was not accessible so could not be fully inspected. Stem diameter measurement given is estimated.	A.1 40+ yrs

Age Classifications:					Condition:			Stems:		
	N	Newly planted	EM	Early Mature		C	Crown		Ø	Diameter
	Y	Young	M	Mature		S	Stem		(Eq)	Equivalent stem diameter using BS5837:2012 definition
	SM	Semi-mature	OM	Over Mature		B	Basal area			

Tree and Tag No Species	Hght (m)	Stems No	Stems Ø (mm)	Crown Spread (m)	Crown Clear (m)	Age	RP A (m²) R (m)	Phys Condition	Structural Condition	Preliminary Recommendations Survey Comment	Cat ERC
T2											
Leyland Cypress *X Cupressocyparis leylandii*	12	2	517 (Eq)	N 2.5 E 3 S 3.5 W 3	4 1 1 1	SM	A: 120.8 R: 6.2	Good	C: Good S: Good B: Good	Tree was not accessible so could not be fully inspected. Stem diameter measurement given is estimated.	**B.2** 40+ yrs
T3											
Cabbage Tree *Cordyline australis*	2.5	3	98 (Eq)	N 1 E 1 S 1 W 1	0.5 0.5 0.5 1	EM	A: 4.4 R: 1.18	Good	C: Good S: Good B: Good	Tree of limited amenity value.	**C.1** 20+ yrs

Age Classifications:					**Condition:**			**Stems:**		
	N	Newly planted	EM	Early Mature		C	Crown		Ø	Diameter
	Y	Young	M	Mature		S	Stem		(Eq)	Equivalent stem diameter using BS5837:2012 definition
	SM	Semi-mature	OM	Over Mature		B	Basal area			

91 Buckingham Road, Manchester, M21 0QT.

Appendix 2: Tree Protection Notice

(To be printed at A3 or larger)

Tree Protection Area

KEEP OUT

Do **not** move this fence

(TOWN & COUNTRY PLANNING ACT 1990)
TREES ENCLOSED BY THIS FENCE ARE PROTECTED BY PLANNING CONDITIONS AND/OR ARE THE SUBJECT OF A TREE PRESERVATION ORDER.
CONTRAVENTION OF A TREE PRESERVATION ORDER MAY LEAD TO CRIMINAL PROSECUTION

ANY INCURSION INTO THE PROTECTED AREA MUST BE WITH THE WRITTEN PERMISSION OF THE LOCAL PLANNING AUTHORITY

Arbtech Consulting Limited.
Unit 3, Well House Barn, Chester Road, Chester, CH4 0DH
https://arbtech.co.uk - 01244 661170

Appendix 3: Contact Details

Name	Position	Company	Contact
Mr Dwayne Campbell	Client		
	Tree Officer		
Alan Thompson	Arboricultural Consultant	Arbtech Consulting Ltd.	[redacted]
	Site Manager		
	Main contractor		

Document Production Record

Document number	Editor	Signature	Position	Issue number	Date
Arbtech AMS 01	Alan Thompson	[redacted]	Arboricultural Consultant	1	27/11/2025

Limitations

Arbtech Consulting Ltd has prepared this Report for the sole use of the above named Client/Agent in accordance with our terms of business, under which our services were performed. No other warranty, expressed or implied, is made as to the professional advice included in this Report or any other services provided by us. This Report may not be relied upon by any other party without the prior and express written agreement of Arbtech Consulting Ltd. The assessments made assume that the sites and facilities will continue to be used for their current purpose without significant change. The conclusions and recommendations contained in this Report are based upon information provided by others and upon the assumption that all relevant information has been provided by those parties from whom it has been requested. Information obtained from third parties has not been independently verified by Arbtech Consulting Ltd.

Copyright

© This Report is the copyright of Arbtech Consulting Ltd. Any unauthorised reproduction or usage by any person other than the addressee is strictly prohibited.