BalconyFort Climbing Frame HIGH Platform

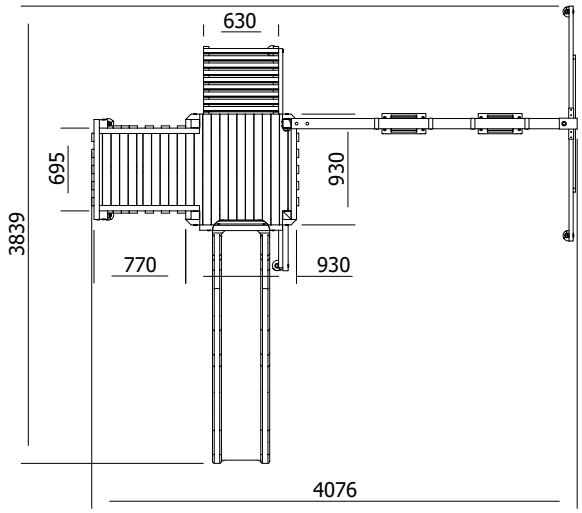

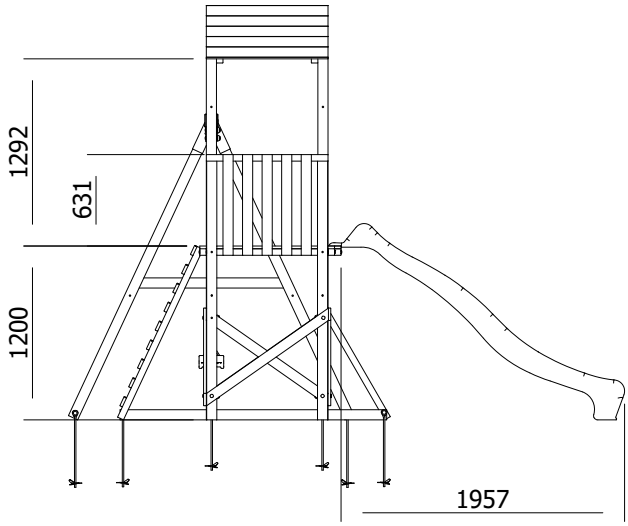

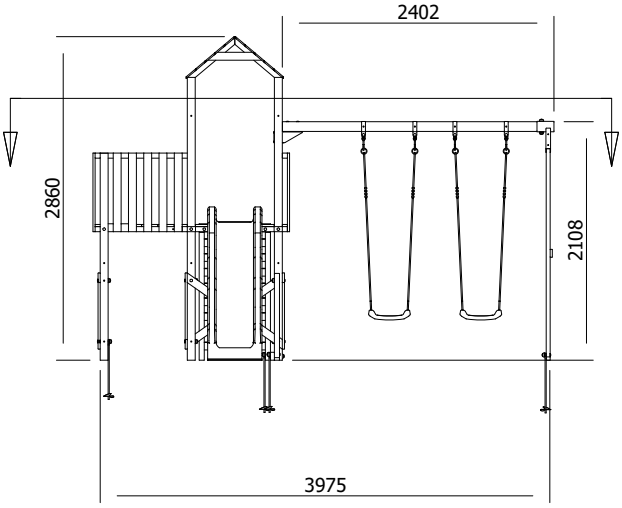

Specification

- External Width: 4.076m (13' 4.5")
- External Depth: 3.839m (12' 7.25")
- Tower Platform Width: 0.93m (3' 0.5")
- Tower Platform Depth: 0.93m (3' 0.5")
- Tower Platform Area (m2): 0.86m2
- Balcony/Bridge Platform Width: 0.695m (2' 3")
- Balcony/Bridge Platform Depth: 0.770m (2' 6")
- Balcony/Bridge Platform Area (m2): 0.54m2
- Overall Height: 2.86m (9' 4.5")
- Platform Height from ground: 1.200m
- Number of Children: 6 Maximum at one time
- Number of Children on Platform: 2 Maximum at one time
- Weight of Children: 50kg Maximum
- Maximum Combined User Weight: 300kg
- Platform Thickness: 19mm
- Platform Framing: 45mm
- Balustrade Height: 0.631m (2' 1")
- Balustrade Timber Thickness: 45mm
- Approx. DIY Assembly Time: 1 Days. This is an approximate time only, based on 2 people. Assembly time may vary depending on season/weather conditions, foundation type, ability of those constructing, etc