Air Conditioning Technical Data

RXP-N

EEDEN23

TABLE OF CONTENTS

RXP-N

1	Features	4
	RXP-N	4
2	Specifications	5
3	Electrical data	9
4	Capacity tables	10
	Cooling Capacity Tables	10
5	Dimensional drawings	13
6	Centre of gravity	14
7	Piping diagrams	16
8	Wiring diagrams	18
	Wiring Diagrams - Three Phase	18
9	Sound data	19
	Sound Pressure Spectrum	19
10	Operation range	22

1 Features

1 - 1 RXP-N

› Outdoor units are fitted with a swing compressor, renowned for its low noise and high energy efficiency

› Daikin outdoor units are neat, sturdy and can easily be mounted on a roof or terrace or simply placed against an outside wall

› Outdoor units for pair application

2 Specifications

2 - 1 Specifications

Technical specifications				FTXP20N + RXP20N	FTXP25N + RXP25N	FTXP35N + RXP35N	FTXP50N + RXP50N	FTXP60N + RXP60N	FTXP71N + RXP71N
Indoor unit				FTXP20N5V1B	FTXP25N5V1B	FTXP35N5V1B	FTXP50N2V1B	FTXP60N2V1B	FTXP71N2V1B
Outdoor unit				RXP20N5V1B	RXP25N5V1B	RXP35N5V1B	RXP50N5V1B	RXP60N5V1B	RXP71N5V1B
Cooling capacity	Min.		kW	1.3			1.7		2.3
	Min.		Btu/h	4,435.8			5,800		7,848
	Min.		kcal/h	1,117.8			1,460		1,976
	Nom.		kW	2.00	2.50	3.50	5.0	6.0	7.1
	Nom.		Btu/h	6,824.3	8,530.4	11,943	17,060	20,472	24,225
	Nom.		kcal/h	1,719.7	2,149.6	3,009.5	4,295	5,154	6,099
	Max.		kW	2.6	3.0	4.0	6.0	7.0	7.3
	Max.		Btu/h	8,871.6	10,236.4	13,648.6	20,472	23,884	24,908
	Max.		kcal/h	2,235.6	2,579.5	3,439.4	5,154	6,013	6,271
Cooling capacity - Low sound mode (Stb. 2020, 189)	Min.		kcal/h	-					
	Max.		kcal/h	-					
Heating capacity	Min.		kW	1.30			1.7		2.3
	Min.		Btu/h	4,435.8			5,800		7,848
	Min.		kcal/h	1,117.8			1,460		1,976
	Nom.		kW	2.50	3.00	4.00	6.0	7.0	8.2
	Nom.		Btu/h	8,530.4	10,236	13,649	20,472	23,884	27,978
	Nom.		kcal/h	2,149.6	2,579.5	3,439.4	5,154	6,013	7,044
	Max.		kW	3.50	4.00	4.80	7.7	8.0	9.0
	Max.		Btu/h	11,942.5	13,648.6	16,378.3	26,272	27,296	30,708
	Max.		kcal/h	3,009.5	3,439.4	4,127.3	6,614	6,872	7,731
Power input	Cooling	Min.	kW	0.31		0.29	0.320	0.332	0.449
		Nom.	kW	0.530	0.660	1.07	1.385	1.824	2.689
		Max.	kW	0.72		1.30	1.826	2.980	3.274
	Heating	Min.	kW	0.25		0.29	0.440	0.456	0.617
		Nom.	kW	0.520	0.690	0.990	1.579	1.928	2.571
		Max.	kW	0.95		1.29	2.356	2.787	3.306
Nominal efficiency	EER			3.75		3.26	3.61	3.29	2.64
	COP			4.77	4.36	4.02	3.80	3.63	3.19
	Annual energy consumption		kWh	-			693	912	1,345
	Energy labeling Directive	Cooling		A					D
		Heating		A					D
Space cooling	Energy efficiency class			A++					
	Capacity	Pdesign	kW	2.00	2.50	3.50	5.0	6.0	7.1
	SEER			7.20			7.30	6.82	6.20
Space cooling	Annual energy consumption		kWh/a	97	121	170	240	308	401
Space heating (Average climate)	Capacity	Pdesign	kW	2.20	2.40	2.80	4.60	4.80	6.20
	Energy efficiency class			A++			A+		
	SCOP/A			4.65	4.61	4.64	4.40	4.10	4.01
	SCOPnet/A			4.68	4.66	4.68	4.47	4.16	4.06
	Pdh Heating capacity at -10°		kW	1.99	2.09	2.35	3.15	3.29	4.24
	Annual energy consumption		kWh/a	663	728	845	1,463	1,638	2,166
	Required back up heating cap at design conditions		kW	0.210	0.310	0.450	1.05	1.51	1.96
Space heating (Warm climate)	Capacity	Pdesignh	kW	1.18	1.29	1.51	2.48	2.58	3.34
	Energy efficiency class			A+++					
	SCOP			5.44	5.55	5.76	5.72	5.21	5.58
	SCOPnet			5.61	5.71	5.91	5.80	5.28	5.65
	Annual energy consumption		kWh/a	303	325	367	607	693	838
	Required back up heating cap at design conditions		kW	0.00					
Space cooling	A Condition (35°C - 27/19)	Pdc	kW	2.00	2.50	3.50	5.00	6.00	7.10
		EERd		3.75		3.26	3.61	3.29	2.64
		Power input	kW	0.530	0.660	1.07	1.39	1.82	2.69
	B Condition (30°C - 27/19)	Pdc	kW	1.47	1.84	2.58	3.68	4.42	5.23
		EERd		5.95	5.43	5.28	5.08	4.82	4.16
		Power input	kW	0.250	0.340	0.490	0.73	0.92	1.26
	C Condition (25°C - 27/19)	Pdc	kW	1.23		1.66	2.37	2.84	3.36
		EERd		9.50	9.26	9.29	8.90	7.99	8.50
		Power input	kW	0.130		0.180	0.27	0.36	0.40
	D Condition (20°C - 27/19)	Pdc	kW	1.30		1.44	2.12	2.39	2.60
		EERd		12.1		12.5	13.9	13.5	10.4
		Power input	kW	0.110		0.120	0.15	0.18	0.25

2 Specifications

2 - 1 Specifications

Technical specifications					FTXP20N + RXP20N	FTXP25N + RXP25N	FTXP35N + RXP35N	FTXP50N + RXP50N	FTXP60N + RXP60N	FTXP71N + RXP71N
Space heating (Average climate)	TOL	Tol (temperature operating limit)		°C	-15					
		Pdh (declared heating cap)		kW	2.05		2.14	3.15	3.29	4.24
		COPd (declared COP)			2.00		2.20	2.39	1.95	1.96
		Power input		kW	1.03		0.970	1.32	1.69	2.16
	TBivalent	Tbiv (bivalent temperature)		°C	-7.0					
		Pdh (declared heating cap)		kW	1.95	2.12	2.48	4.07	4.25	5.48
		COPd (declared COP)			3.30	3.22	3.23	2.76	2.25	2.26
		Power input		kW	0.590	0.660	0.770	1.47	1.89	2.42
	A Condition (-7°C)	Pdh (declared heating cap)		kW	1.95	2.12	2.48	4.07	4.25	5.48
		COPd (declared COP)			3.30	3.22	3.23	2.76	2.25	2.26
		Power input		kW	0.590	0.660	0.770	1.47	1.89	2.42
Space heating (Average climate)	B Condition (2°C)	Pdh (declared heating cap)		kW	1.18	1.29	1.51	2.48	2.58	3.34
		COPd (declared COP)			4.74	4.63	4.58	4.46	4.39	4.05
		Power input		kW	0.250	0.280	0.330	0.56	0.59	0.83
	C Condition (7°C)	Pdh (declared heating cap)		kW	0.910		1.05	1.59	1.66	2.15
		COPd (declared COP)			5.65	5.63	5.79	5.69	5.29	5.50
		Power input		kW	0.160		0.180	0.28	0.31	0.39
	D Condition (12°C)	Pdh (declared heating cap)		kW	1.06		1.11	1.60	2.00	2.07
		COPd (declared COP)			7.13	7.11	7.35	7.11	6.41	7.00
		Power input		kW	0.150			0.23	0.31	0.30
Space heating (Warm climate)	TOL	Tol (temperature operating limit)		°C	-15					
		Pdh (declared heating cap)		kW	2.05		2.14	3.15	3.29	4.24
		COPd (declared COP)			2.00		2.20	2.39	1.95	1.96
		Power input		kW	1.03		0.970	1.32	1.69	2.16
	TBivalent	Tbiv (bivalent temperature)		°C	2					
		Pdh (declared heating cap)		kW	1.18	1.29	1.51	2.48	2.58	3.34
		COPd (declared COP)			4.74	4.63	4.58	4.46	4.39	4.05
		Power input		kW	0.250	0.280	0.330	0.56	0.59	0.83
	B Condition (2°C)	Pdh (declared heating cap)		kW	1.18	1.29	1.51	2.48	2.58	3.34
		COPd (declared COP)			4.74	4.63	4.58	4.46	4.39	4.05
		Power input		kW	0.250	0.280	0.330	0.56	0.59	0.83
	C Condition (7°C)	Pdh (declared heating cap)		kW	0.910		1.05	1.59	1.66	2.15
		COPd (declared COP)			5.65	5.63	5.79	5.69	5.29	5.50
		Power input		kW	0.160		0.180	0.28	0.31	0.39
	D Condition (12°C)	Pdh (declared heating cap)		kW	1.06		1.11	1.60	2.00	2.07
		COPd (declared COP)			7.13	7.11	7.35	7.11	6.41	7.00
		Power input		kW	0.150			0.23	0.31	0.30
Power consumption in other than active mode	Crankcase heater mode	PCK		W	0.00			0.0		
	Off mode	POFF		W	1.00			1.0		
	Standby mode	Cooling	PSB	W	1.00			1.0		
		Heating	PSB	W	1.0			-		
	Thermostat-off mode	PTO	Cooling	W	12			13		15
			Heating	W	12					14
Cooling	Cdc (Degradation cooling)				0.25					
Heating	Cdh (Degradation heating)				0.25					
Cooling function included					Yes					
Heating function included					Yes					
Average climate included					Yes					
Cold season included					No			-		
Warm season included					Yes					
Ecolabel logo					No			-		
Moisture removal	Cooling			l/h	55.0		58.0	-		
Eurovent	Sound power level outdoor	Cooling	Nom.	dBA	61		62	61	63	66
	Sound power level indoor	Cooling	Nom.	dBA	-			59	60	62
	Piping length	Cooling	Measuring condition	m	-			5.0		

2 Specifications

2 - 1 Specifications

Electrical specifications				FTXP20N + RXP20N	FTXP25N + RXP25N	FTXP35N + RXP35N	FTXP50N + RXP50N	FTXP60N + RXP60N	FTXP71N + RXP71N
Power factor	Nominal	Cooling	%	-			95.6	99.1	
		Heating	%	-			96.7	99.2	98.9
Current	Nominal running current (RLA)	Cooling	A	-			6.3	8.0	11.8
	Nominal running current (RLA) - 50Hz	Heating	A	-			7.1	8.5	11.3
Current - 50Hz	Maximum fuse amps (MFA)		A	-			20		

Nominal cooling capacities are based on: indoor temperature: 27°CDB, 19°CWB, outdoor temperature: 35°CDB, equivalent refrigerant piping: 5m, level difference: 0m. |
Nominal heating capacities are based on: indoor temperature: 20°CDB, outdoor temperature: 7°CDB, 6°CWB, equivalent refrigerant piping: 5m, level difference: 0m. |
See separate drawing for electrical data

Technical Specifications					RXP20N	RXP25N	RXP35N	RXP50N	RXP60N	RXP71N
Casing	Colour				Ivory white					
Dimensions	Unit	Height		mm	556			734		
		Width		mm	740			954		
		Depth		mm	343			401		
	Packed unit	Height		mm	630			820		
		Width		mm	790			1,050		
		Depth		mm	400			480		
Weight	Unit			kg	24			46.0	50.0	
	Packed unit			kg	26			50.0	54.0	
Packing	Weight			kg	2			4.0		
Heat exchanger	Length			mm	670		647	943	920	
	Rows	Quantity			1		2	1	2	
	Fin pitch			mm	1.40			1.4		
	Stages	Quantity			24			32		
	Passes	Quantity			2.0		3.0	2.0		
	Tube type				ø7 Hi-XD					
	Tube material				Copper			-		
	Fin	Type			Waffle Hydrophilic Blue			Waffle fin (PE)		
Fan	Type				Propeller			Propeller fan		
	Air flow rate	Cooling	High	m^3/min	27.6		28.2	-		
				cfm	975		996	-		
			Nom.	m^3/min	-			41.0	45.5	
				cfm	-			1,447	1,608	
		Heating	High	m^3/min	27.1	28.0	26.8	-		
				cfm	957	990	946	-		
			Nom.	m^3/min	-			43.2	45.3	46.5
				cfm	-			1,527	1,600	1,643
Fan motor	Model				DFC03Z1VA			D55F-31		
	Insulation grade				Class "E"			-		
	Output			W	28			55		
	Speed	Cooling	High	rpm	760			740	760	
			Nom.	rpm	-			710	740	
			Low	rpm	640			680	740	
		Heating	High	rpm	790	820	760	710	740	760
			Nom.	rpm	-			710	740	760
			Low	rpm	550			630	660	
Compressor	Model				1Y078BKAX1P#D			2YC40JXD#C		
	Oil Amount			cm^3	400			650		
	Type				Hermetically sealed swing compressor					
	Output			W	700			1,300		
	Oil Type				FW68DA					
Operation range	Cooling	Ambient	Min.	°CDB	-10					
			Max.	°CDB	48					
	Heating	Ambient	Min.	°CWB	-15			-		
				°CDB	-15					
			Max.	°CWB	18			-		
				°CDB	24					
Sound power level	Heating	Nom.		dBA	60		62	-		
Sound pressure level	Cooling	High		dBA	46		48	-		
		Nom.		dBA	-			47	49	52
	Heating	High		dBA	47		48	-		
		Nom.		dBA	-			49		52
Refrigerant	Type				R-32					
	Charge			kg	0.55		0.70	0.90	1.15	
	GWP				675.0			675		

2 Specifications

2 - 1 Specifications

Technical Specifications					RXP20N	RXP25N	RXP35N	RXP50N	RXP60N	RXP71N
Piping connections	Liquid	OD		mm	6.4					
	Gas	OD		mm	9.5			12.7		
	Drain	OD		mm	18			16		
	Piping length	OU - IU	Max.	m	20			30		
	Additional refrigerant charge			kg/m	0.02 (for piping length exceeding 10m)					
	Level difference	IU - OU	Max.	m	12			20		
	Heat insulation				-			Both liquid and gas pipes		
Capacity control	Method				Variable (inverter)					

Standard accessories: Drain plug;Quantity: 1;

Standard accessories: Installation manual;Quantity: 1;

Standard accessories: Refrigerant charge label;Quantity: 1;

Standard accessories: Multilingual fluorinated greenhouse gases labels;Quantity: 1;

Standard accessories: General safety precautions;Quantity: 1;

Standard accessories: Drain cap (1);Quantity: 6;

Standard accessories: Drain cap (2);Quantity: 3;

Electrical Specifications				RXP20N	RXP25N	RXP35N	RXP50N	RXP60N	RXP71N
Power supply	Phase			1~					
	Frequency		Hz	50					
	Voltage		V	220-240					
Wiring connections	For power supply	Quantity		3					
		Remark		Earth wire included					
	For connection with indoor	Quantity		4					
		Remark		Earth wire included					
Current - 50Hz	Maximum fuse amps (MFA)		A	16			20		

See separate drawing for operation range |
See separate drawing for electrical data |
Contains fluorinated greenhouse gases

3 Electrical data

3 - 1 Electrical Data

RXP20-35N

Unit combination restrictions		Power supply					COMP		OFM		IFM	
Indoor unit	Outdoor unit	Hz	Voltage	Voltage range	MCA	MFA	RHz	RLA	kW	FLA	kW	FLA
FTXP20N5V1B	RXP20N5V1B	50	220	Maximum ·50·Hz ·264·V	7,99	16	40,0	2,7	0,024	0,17	0,024	0,34
		50	230					2,6				
		50	240	Minimum ·50·Hz ·198·V				2,5				
FTXP25N5V1B	RXP25N5V1B	50	220	Maximum ·50·Hz ·264·V	7,99	16	49,0	2,8	0,024	0,17	0,024	0,34
		50	230					2,7				
		50	240	Minimum ·50·Hz ·198·V				2,6				
FTXP35N5V1B	RXP35N5V1B	50	220	Maximum ·50·Hz ·264·V	9,20	16	78,0	4,3	0,021	0,16	0,037	0,45
		50	230					4,1				
		50	240	Minimum ·50·Hz ·198·V				3,9				
ATXP20N5V1B	ARXP20N5V1B	50	220	Maximum ·50·Hz ·264·V	7,99	16	40,0	2,7	0,024	0,17	0,024	0,34
		50	230					2,6				
		50	240	Minimum ·50·Hz ·198·V				2,5				
ATXP25N5V1B	ARXP25N5V1B	50	220	Maximum ·50·Hz ·264·V	7,99	16	49,0	2,8	0,024	0,17	0,024	0,34
		50	230					2,7				
		50	240	Minimum ·50·Hz ·198·V				2,6				
ATXP35N5V1B	ARXP35N5V1B	50	220	Maximum ·50·Hz ·264·V	9,20	16	78,0	4,3	0,021	0,16	0,037	0,45
		50	230					4,1				
		50	240	Minimum ·50·Hz ·198·V				3,9				

Notes
1) The ·RLA· is based on the following conditions.
Outdoor temperature ·35·°C DB
Indoor temperature ·27·°C DB / ·19·°C WB
2) Select the wire size according to the MCA.
3) The maximum allowable voltage that is unbalanced between phases is ·2·%.
4) Use a circuit breaker instead of a fuse.

Symbols
MCA: Minimum Circuit Ampere [A]
MFA: Maximum Fuse Ampere [A]
RLA: Rated load amps [A]
OFM: Outdoor fan motor
IFM: Indoor fan motor
RHz: Rated operating frequency [Hz]
FLA: Full Load Ampere [A]
kW: Fan motor rated output [kW]

3D144318

RXP50-71N

Unit combination restrictions		Power supply					COMP	OFM		IFM	
Indoor unit	Outdoor unit	Hz	Voltage	Voltage range	MCA	MFA	RLA	kW	FLA	kW	FLA
FTXP50M2V1B	RXP50M2V1B	50	220	Maximum ·50·Hz ·264·V	14,5	20	6,5	0,056	0,37	0,045	0,43
		50	230				6,3				
		50	240	Minimum ·50·Hz ·198·V			6,1				
FTXP60M2V1B	RXP60M2V1B	50	220	Maximum ·50·Hz ·264·V	15,7	20	8,1	0,056	0,37	0,049	0,46
		50	230				8,0				
		50	240	Minimum ·50·Hz ·198·V			7,9				
FTXP71M2V1B	RXP71M2V1B	50	220	Maximum ·50·Hz ·264·V	15,7	20	11,9	0,056	0,37	0,049	0,46
		50	230				11,8				
		50	240	Minimum ·50·Hz ·198·V			11,7				
FTXP50M2V1B	RXP50M5V1B	50	220	Maximum ·50·Hz ·264·V	14,5	20	6,5	0,056	0,37	0,045	0,43
		50	230				6,3				
		50	240	Minimum ·50·Hz ·198·V			6,1				
FTXP60M2V1B	RXP60M5V1B	50	220	Maximum ·50·Hz ·264·V	15,7	20	8,1	0,056	0,37	0,049	0,46
		50	230				8,0				
		50	240	Minimum ·50·Hz ·198·V			7,9				
FTXP71M2V1B	RXP71M5V1B	50	220	Maximum ·50·Hz ·264·V	15,7	20	11,9	0,056	0,37	0,049	0,46
		50	230				11,8				
		50	240	Minimum ·50·Hz ·198·V			11,7				
FTXP50N2V1B	RXP50N5V1B	50	220	Maximum ·50·Hz ·264·V	14,5	20	6,5	0,056	0,37	0,045	0,43
		50	230				6,3				
		50	240	Minimum ·50·Hz ·198·V			6,1				
FTXP60N2V1B	RXP60N5V1B	50	220	Maximum ·50·Hz ·264·V	15,7	20	8,1	0,056	0,37	0,049	0,46
		50	230				8,0				
		50	240	Minimum ·50·Hz ·198·V			7,9				
FTXP71N2V1B	RXP71N5V1B	50	220	Maximum ·50·Hz ·264·V	15,7	20	11,9	0,056	0,37	0,049	0,46
		50	230				11,8				
		50	240	Minimum ·50·Hz ·198·V			11,7				

Symbols
MCA: Minimum Circuit Amperes [A]
MFA: Maximum Fuse Amperes [A]
RLA: Rated Load Amperes [A]
OFM: Outdoor fan motor
IFM: Indoor fan motor
FLA: Full Load Amperes [A]
kW: Fan motor rated output [kW]
COMP: Compressor

Notes
1) The ·RLA· is based on the following conditions.
Outdoor temperature ·35·°C DB
Indoor temperature ·27·°C DB / ·19·°C WB
2) Select the wire size according to the MCA.
3) The maximum allowable voltage that is unbalanced between phases is ·2·%.
4) Use a circuit breaker instead of a fuse.

3D120329C

4 Capacity tables

4 - 1 Cooling Capacity Tables

FTXP20N5V1B / RXP20N5V1B

Cooling ·220-240V 50Hz·

AFR	9,5
BF	0,22

Indoor air temperature [°C WB]	Indoor air temperature [°C DB]	Outdoor air temperature [°C DB]																	
		20			25			30			32			**35**			40		
		TC	SHC	PI	TC	SHC	PI	TC	SHC	PI	TC	SHC	PI	TC	SHC	PI	TC	SHC	PI
14	20	2,05	1,80	0,42	1,96	1,76	0,45	1,86	1,72	0,49	1,83	1,70	0,51	1,77	1,67	0,53	1,68	1,63	0,56
16	22	2,14	1,77	0,42	2,05	1,73	0,46	1,95	1,69	0,49	1,92	1,68	0,51	1,86	1,65	0,53	1,77	1,61	0,57
18	25	2,23	1,89	0,42	2,14	1,86	0,46	2,05	1,82	0,49	2,01	1,81	0,51	1,95	1,78	0,53	1,86	1,75	0,57
19	**27**	2,28	2,03	0,42	2,19	2,00	0,46	2,09	1,96	0,50	2,06	1,95	0,51	2,00	1,93	0,53	1,91	1,89	0,57
22	30	2,42	1,97	0,42	2,32	1,94	0,46	2,23	1,91	0,50	2,19	1,90	0,51	2,14	1,88	0,54	2,05	1,85	0,57
24	32	2,51	1,93	0,43	2,42	1,91	0,46	2,32	1,88	0,50	2,29	1,87	0,52	2,23	1,85	0,54	2,14	1,82	0,58

Heating ·220-240V 50Hz·

AFR	10,4

Indoor air temperature [°C DB]	Outdoor air temperature [°C DB]											
	-15		-10		-5		0		**6**		10	
	TC	PI	TC	PI	TC	PI	TC	PI	TC	PI	TC	PI
15	1,19	0,34	1,43	0,35	1,67	0,37	1,92	0,49	2,59	0,51	2,81	0,53
20	1,12	0,35	1,36	0,36	1,60	0,38	1,84	0,50	2,50	0,52	2,73	0,54
22	1,09	0,35	1,33	0,37	1,57	0,38	1,81	0,50	2,47	0,53	2,69	0,55
24	1,06	0,35	1,30	0,37	1,54	0,39	1,78	0,51	2,43	0,53	2,66	0,55
25	1,04	0,36	1,28	0,37	1,52	0,39	1,76	0,51	2,41	0,54	2,64	0,55
27	1,01	0,36	1,25	0,38	1,49	0,39	1,74	0,51	2,38	0,54	2,61	0,56

Heating capacity at nominal operating frequency, measured according to ·EN 14511·.

Notes
1. The capacities are based on the following conditions:
   Corresponding refrigerant piping length: ·5,0· m
   Level difference: ·0·m
2. The bold cells indicate the standard conditions.

Symbols
TC: Total capacity [kW]
PI: Power input [kW]
SHC: Sensible heat capacity [kW]
AFR: Air flow rate [m³/min]
BF: Bypass factor

3D144315

FTXP25N5V1B / RXP25N5V1B

Cooling ·220-240V 50Hz·

AFR	9,7
BF	0,22

Indoor air temperature [°C WB]	Indoor air temperature [°C DB]	Outdoor air temperature [°C DB]																	
		20			25			30			32			**35**			40		
		TC	SHC	PI	TC	SHC	PI	TC	SHC	PI	TC	SHC	PI	TC	SHC	PI	TC	SHC	PI
14	20	2,56	2,08	0,51	2,44	2,03	0,56	2,33	1,97	0,60	2,28	1,96	0,62	2,21	1,92	0,65	2,10	1,86	0,70
16	22	2,68	2,05	0,51	2,56	1,99	0,56	2,44	1,94	0,61	2,40	1,92	0,63	2,33	1,89	0,66	2,21	1,84	0,71
18	25	2,79	2,17	0,51	2,68	2,12	0,56	2,56	2,07	0,61	2,51	2,06	0,63	2,44	2,03	0,66	2,33	1,98	0,71
19	**27**	2,85	2,31	0,51	2,73	2,27	0,56	2,62	2,22	0,61	2,57	2,20	0,63	2,50	2,18	0,66	2,38	2,13	0,71
22	30	3,02	2,24	0,52	2,91	2,20	0,57	2,79	2,16	0,62	2,74	2,14	0,64	2,67	2,12	0,67	2,56	2,08	0,71
24	32	3,14	2,19	0,52	3,02	2,15	0,56	2,90	2,12	0,63	2,86	2,10	0,64	2,79	2,08	0,67	2,67	2,04	0,72

Heating ·220-240V 50Hz·

AFR	10,4

Indoor air temperature [°C DB]	Outdoor air temperature [°C DB]											
	-15		-10		-5		0		**6**		10	
	TC	PI	TC	PI	TC	PI	TC	PI	TC	PI	TC	PI
15	1,43	0,44	1,72	0,47	2,00	0,49	2,30	0,64	3,10	0,67	3,37	0,70
20	1,34	0,46	1,63	0,48	1,92	0,50	2,21	0,65	3,00	0,69	3,27	0,71
22	1,31	0,46	1,59	0,48	1,88	0,51	2,17	0,66	2,96	0,69	3,23	0,72
24	1,27	0,47	1,56	0,49	1,85	0,51	2,14	0,67	2,92	0,70	3,19	0,72
25	1,25	0,47	1,54	0,49	1,83	0,51	2,12	0,67	2,90	0,70	3,17	0,73
27	1,22	0,47	1,51	0,50	1,79	0,52	2,09	0,68	2,86	0,71	3,13	0,73

Heating capacity at nominal operating frequency, measured according to ·EN 14511·.

Notes
1. The capacities are based on the following conditions:
   Corresponding refrigerant piping length: ·5,0· m
   Level difference: ·0·m
2. The bold cells indicate the standard conditions.

Symbols
TC: Total capacity [kW]
PI: Power input [kW]
SHC: Sensible heat capacity [kW]
AFR: Air flow rate [m³/min]
BF: Bypass factor

3D144316

4 Capacity tables

4 - 1 Cooling Capacity Tables

FTXP35N5V1B / RXP35N5V1B

AFR	11,5
BF	0,23

Cooling ·220-240V 50Hz·

Indoor air temperature [°C WB]	Indoor air temperature [°C DB]	Outdoor air temperature [°C DB]																	
		20			25			30			32			**35**			40		
		TC	SHC	PI	TC	SHC	PI	TC	SHC	PI	TC	SHC	PI	TC	SHC	PI	TC	SHC	PI
14	20	3,59	2,69	0,84	3,42	2,61	0,92	3,26	2,53	0,98	3,19	2,50	1,01	3,10	2,45	1,06	2,93	2,37	1,13
16	22	3,75	2,65	0,85	3,58	2,57	0,92	3,42	2,49	0,99	3,36	2,47	1,02	3,26	2,42	1,06	3,10	2,35	1,14
18	25	3,91	2,78	0,85	3,75	2,71	0,93	3,58	2,64	0,99	3,52	2,61	1,02	3,42	2,57	1,07	3,26	2,50	1,14
19	**27**	3,99	2,93	0,85	3,83	2,86	0,93	3,66	2,80	0,99	3,60	2,77	1,02	3,50	2,73	1,07	3,34	2,67	1,15
22	30	4,23	2,83	0,86	4,07	2,77	0,94	3,90	2,71	1,00	3,84	2,69	1,03	3,74	2,65	1,08	3,58	2,59	1,15
24	32	4,39	2,76	0,87	4,23	2,70	0,94	4,07	2,65	1,01	4,00	2,63	1,04	3,90	2,59	1,08	3,74	2,54	1,16

Heating ·220-240V 50Hz·

AFR	11,5

Indoor air temperature [°C DB]	Outdoor air temperature [°C DB]											
	-15		-10		-5		0		**6**		10	
	TC	PI	TC	PI	TC	PI	TC	PI	TC	PI	TC	PI
15	1,90	0,63	2,29	0,66	2,67	0,70	3,07	0,91	4,14	0,96	4,50	1,00
20	1,79	0,65	2,17	0,68	2,56	0,71	2,95	0,94	4,00	0,99	4,36	1,02
22	1,74	0,66	2,12	0,69	2,51	0,72	2,90	0,94	3,94	0,99	4,31	1,03
24	1,69	0,66	2,08	0,70	2,46	0,73	2,85	0,95	3,89	1,00	4,25	1,04
25	1,67	0,67	2,05	0,70	2,44	0,73	2,83	0,96	3,86	1,01	4,22	1,04
27	1,62	0,67	2,01	0,71	2,39	0,74	2,78	0,97	3,81	1,02	4,17	1,05

Heating capacity at nominal operating frequency, measured according to ·EN 14511·.

Notes
1. The capacities are based on the following conditions:
   Corresponding refrigerant piping length: ·5,0· m
   Level difference: ·0·m
2. The bold cells indicate the standard conditions.

Symbols
TC: Total capacity [kW]
PI: Power input [kW]
SHC: Sensible heat capacity [kW]
AFR: Air flow rate [m³/min]
BF: Bypass factor

3D144317

FTXP50N / RXP50N

Cooling ·50· Hz ·230· V

AFR	16,3
BF	0,27

Indoor temperature		Outdoor temperature [°C DB]																	
EWB	EDB	20			25			30			32			35			40		
°C	°C	TC	SHC	PI	TC	SHC	PI	TC	SHC	PI	TC	SHC	PI	TC	SHC	PI	TC	SHC	PI
14,0	20	5,12	3,71	1,06	4,89	3,59	1,17	4,66	3,47	1,27	4,56	3,42	1,31	4,42	3,35	1,37	4,19	3,24	1,46
16,0	22	5,35	3,64	1,07	5,12	3,53	1,17	4,89	3,42	1,27	4,79	3,38	1,32	4,65	3,31	1,38	4,42	3,20	1,47
18,0	25	5,58	3,80	1,07	5,35	3,70	1,18	5,12	3,59	1,28	5,02	3,55	1,32	4,88	3,49	1,38	4,65	3,39	1,48
19,0	27	5,70	3,99	1,08	5,47	3,89	1,18	5,23	3,79	1,28	5,14	3,75	1,33	5,00	3,70	1,39	4,77	3,60	1,48
22,0	30	6,04	3,85	1,09	5,81	3,76	1,19	5,58	3,67	1,29	5,49	3,63	1,33	5,35	3,58	1,39	5,11	3,50	1,49
24,0	32	6,27	3,74	1,09	6,04	3,66	1,20	5,81	3,58	1,30	5,72	3,55	1,34	5,58	3,50	1,39	5,34	3,42	1,50

Heating ·50· Hz ·230· V

AFR	17,3

Indoor temperature	Outdoor temperature [°C WB]											
EDB	-15		-10		-5		0		6		10	
°C	TC	PI	TC	PI	TC	PI	TC	PI	TC	PI	TC	PI
15,0	2,86	1,02	3,43	1,07	4,01	1,12	4,58	1,47	6,21	1,54	6,75	1,60
20,0	2,68	1,04	3,26	1,10	3,83	1,15	4,41	1,50	6,00	1,58	6,54	1,63
22,0	2,61	1,06	3,19	1,11	3,76	1,16	4,34	1,52	5,92	1,59	6,46	1,65
24,0	2,54	1,07	3,12	1,12	3,69	1,17	4,27	1,53	5,83	1,61	6,38	1,66
25,0	2,51	1,07	3,08	1,13	3,66	1,18	4,23	1,54	5,79	1,61	6,33	1,67
27,0	2,43	1,08	3,01	1,14	3,59	1,19	4,17	1,55	5,71	1,63	6,25	1,68

Symbols
AFR: Air flow rate [m³/min]
BF: Bypass factor
EWB: Entering wet-bulb temperature (°C WB)
EDB: Entering dry-bulb temperature (°C DB)
TC: Total capacity [kW]
SHC: Sensible heat capacity [kW]
PI: Power input [kW]

Notes
1. The ratings shown are net capacities which include a deduction for indoor fan motor heat.
2. The bold cells indicate the standard conditions.
   Rated operating frequency [Hz]
3. The capacities are based on the following conditions:
   Corresponding refrigerant piping length: ·5· m
   Level difference: ·0·m
4. The air flow rate and bypass factor are mentioned in the table.

3D120340A

4 Capacity tables

4 - 1 Cooling Capacity Tables

4

FTXP60N / RXP60N

Cooling ·50· Hz ·230· V

AFR	16,8
BF	0,27

Indoor temperature		Outdoor temperature [°C DB]																	
EWB	EDB	20			25			30			32			35			40		
°C	°C	TC	SHC	PI	TC	SHC	PI	TC	SHC	PI	TC	SHC	PI	TC	SHC	PI	TC	SHC	PI
14,0	20	6,15	4,35	1,40	5,87	4,20	1,53	5,59	4,05	1,67	5,48	4,00	1,72	5,31	3,91	1,81	5,03	3,77	1,95
16,0	22	6,42	4,27	1,41	6,14	4,13	1,55	5,86	4,00	1,68	5,75	3,94	1,73	5,59	3,86	1,81	5,31	3,73	1,95
18,0	25	6,70	4,44	1,42	6,42	4,31	1,56	6,14	4,18	1,69	6,03	4,13	1,75	5,86	4,05	1,82	5,58	3,93	1,96
19,0	27	6,84	4,65	1,42	6,56	4,52	1,56	6,28	4,40	1,69	6,17	4,35	1,75	6,00	4,28	1,82	5,72	4,16	1,97
22,0	30	7,25	4,47	1,43	6,97	4,36	1,57	6,69	4,25	1,70	6,58	4,21	1,76	6,41	4,14	1,83	6,14	4,04	1,98
24,0	32	7,53	4,34	1,45	7,25	4,24	1,58	6,97	4,14	1,71	6,86	4,10	1,77	6,69	4,04	1,85	6,41	3,94	1,98

Heating ·50· Hz ·230· V

AFR	17,9

Indoor temperature	Outdoor temperature [°C WB]											
EDB	-15		-10		-5		0		6		10	
°C	TC	PI	TC	PI	TC	PI	TC	PI	TC	PI	TC	PI
15,0	3,33	1,24	4,01	1,31	4,68	1,37	5,35	1,79	7,24	1,89	7,87	1,95
20,0	3,13	1,28	3,80	1,34	4,47	1,40	5,14	1,83	7,00	1,93	7,63	1,99
22,0	3,05	1,29	3,72	1,35	4,39	1,42	5,06	1,85	6,90	1,95	7,54	2,01
24,0	2,96	1,30	3,64	1,37	4,31	1,43	4,98	1,87	6,81	1,96	7,44	2,03
25,0	2,92	1,31	3,59	1,37	4,27	1,44	4,94	1,88	6,76	1,97	7,39	2,04
27,0	2,84	1,32	3,51	1,39	4,18	1,45	4,85	1,89	6,66	1,99	7,29	2,05

Symbols

AFR: Air flow rate [m³/min]
BF: Bypass factor
EWB: Entering wet-bulb temperature (°C WB)
EDB: Entering dry-bulb temperature (°C DB)
TC: Total capacity [kW]
SHC: Sensible heat capacity [kW]
PI: Power input [kW]

Notes

1. The ratings shown are net capacities which include a deduction for indoor fan motor heat.
2. The bold cells indicate the standard conditions.
   Rated operating frequency [Hz]
3. The capacities are based on the following conditions:
   Corresponding refrigerant piping length: ·5· m
   Level difference: ·0·m
4. The air flow rate and bypass factor are mentioned in the table.

3D120341A

FTXP71N / RXP71N

Cooling ·50· Hz ·230· V

AFR	16,8
BF	0,27

Indoor temperature		Outdoor temperature [°C DB]																	
EWB	EDB	20			25			30			32			35			40		
°C	°C	TC	SHC	PI	TC	SHC	PI	TC	SHC	PI	TC	SHC	PI	TC	SHC	PI	TC	SHC	PI
14,0	20	7,28	5,14	2,07	6,95	4,97	2,26	6,61	4,79	2,46	6,48	4,73	2,54	6,28	4,62	2,67	5,95	4,46	2,87
16,0	22	7,60	5,05	2,08	7,27	4,88	2,28	6,93	4,73	2,48	6,80	4,66	2,56	6,61	4,56	2,67	6,28	4,41	2,87
18,0	25	7,93	5,25	2,10	7,60	5,10	2,30	7,27	4,94	2,49	7,14	4,88	2,57	6,93	4,79	2,69	6,60	4,65	2,89
19,0	27	8,09	5,50	2,10	7,76	5,34	2,30	7,43	5,20	2,49	7,30	5,14	2,57	7,10	5,06	2,69	6,77	4,92	2,90
22,0	30	8,58	5,28	2,12	8,25	5,15	2,31	7,92	5,02	2,51	7,79	4,98	2,59	7,58	4,89	2,71	7,27	4,78	2,92
24,0	32	8,91	5,13	2,13	8,58	5,01	2,33	8,25	4,89	2,53	8,12	4,85	2,61	7,92	4,78	2,72	7,58	4,66	2,92

Heating ·50· Hz ·230· V

AFR	17,9

Indoor temperature	Outdoor temperature [°C WB]											
EDB	-15		-10		-5		0		6		10	
°C	TC	PI	TC	PI	TC	PI	TC	PI	TC	PI	TC	PI
15,0	3,90	1,65	4,70	1,74	5,48	1,82	6,26	2,38	8,48	2,52	9,22	2,60
20,0	3,67	1,70	4,45	1,78	5,24	1,86	6,03	2,44	8,20	2,57	8,94	2,65
22,0	3,57	1,72	4,36	1,80	5,14	1,89	5,92	2,46	8,08	2,60	8,83	2,68
24,0	3,47	1,73	4,26	1,82	5,05	1,90	5,83	2,49	7,98	2,61	8,72	2,70
25,0	3,42	1,74	4,21	1,82	5,00	1,92	5,79	2,50	7,92	2,62	8,66	2,72
27,0	3,33	1,76	4,11	1,85	4,90	1,93	5,69	2,52	7,80	2,65	8,54	2,73

Symbols

AFR: Air flow rate [m³/min]
BF: Bypass factor
EWB: Entering wet-bulb temperature (°C WB)
EDB: Entering dry-bulb temperature (°C DB)
TC: Total capacity [kW]
SHC: Sensible heat capacity [kW]
PI: Power input [kW]

Notes

1. The ratings shown are net capacities which include a deduction for indoor fan motor heat.
2. The bold cells indicate the standard conditions.
   Rated operating frequency [Hz]
3. The capacities are based on the following conditions:
   Corresponding refrigerant piping length: ·5· m
   Level difference: ·0·m
4. The air flow rate and bypass factor are mentioned in the table.

3D120342A

5 Dimensional drawings

5 - 1 Dimensional Drawings

RXP20-35N

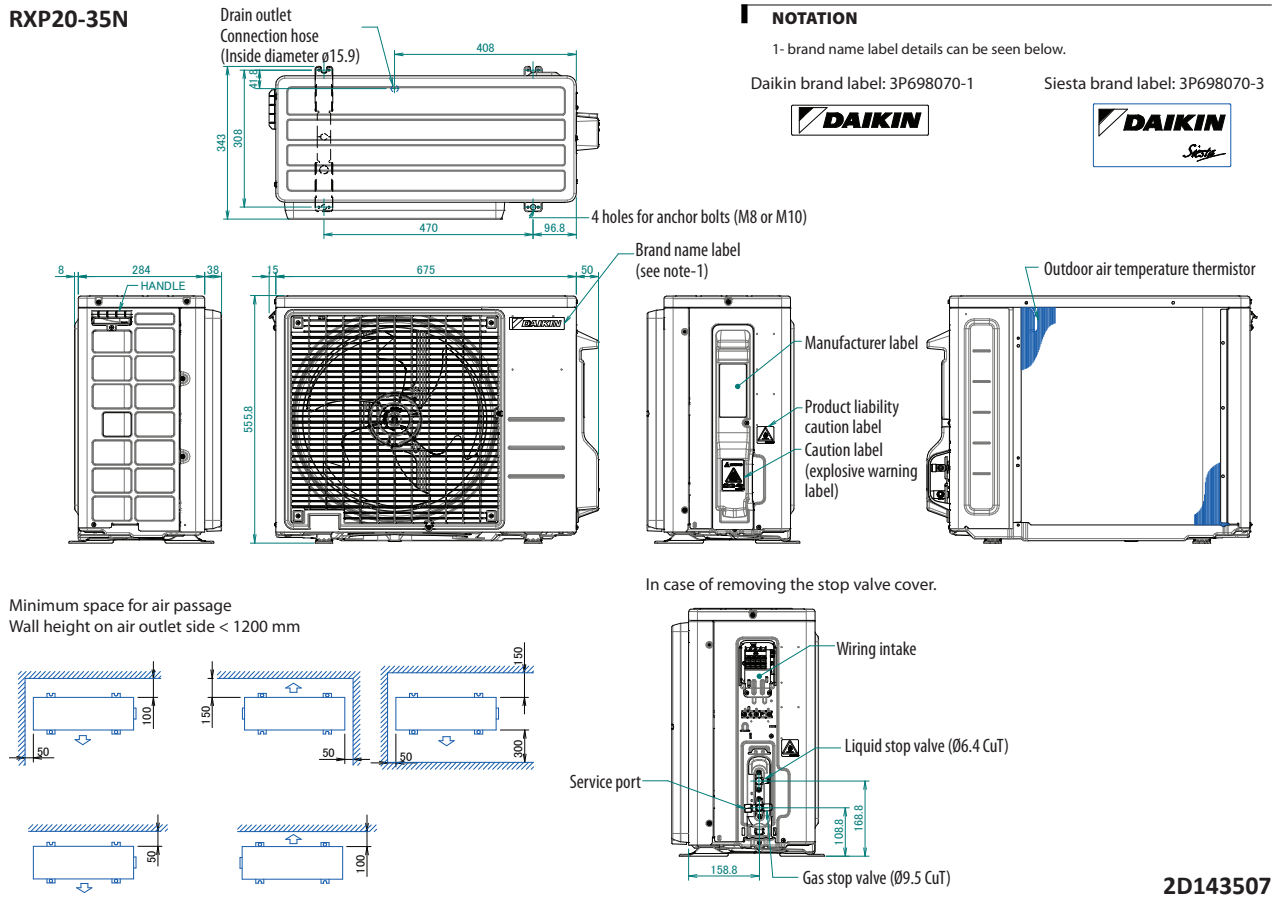

NOTATION

1- brand name label details can be seen below.

Daikin brand label: 3P698070-1

Siesta brand label: 3P698070-3

2D143507

RXP50-71N

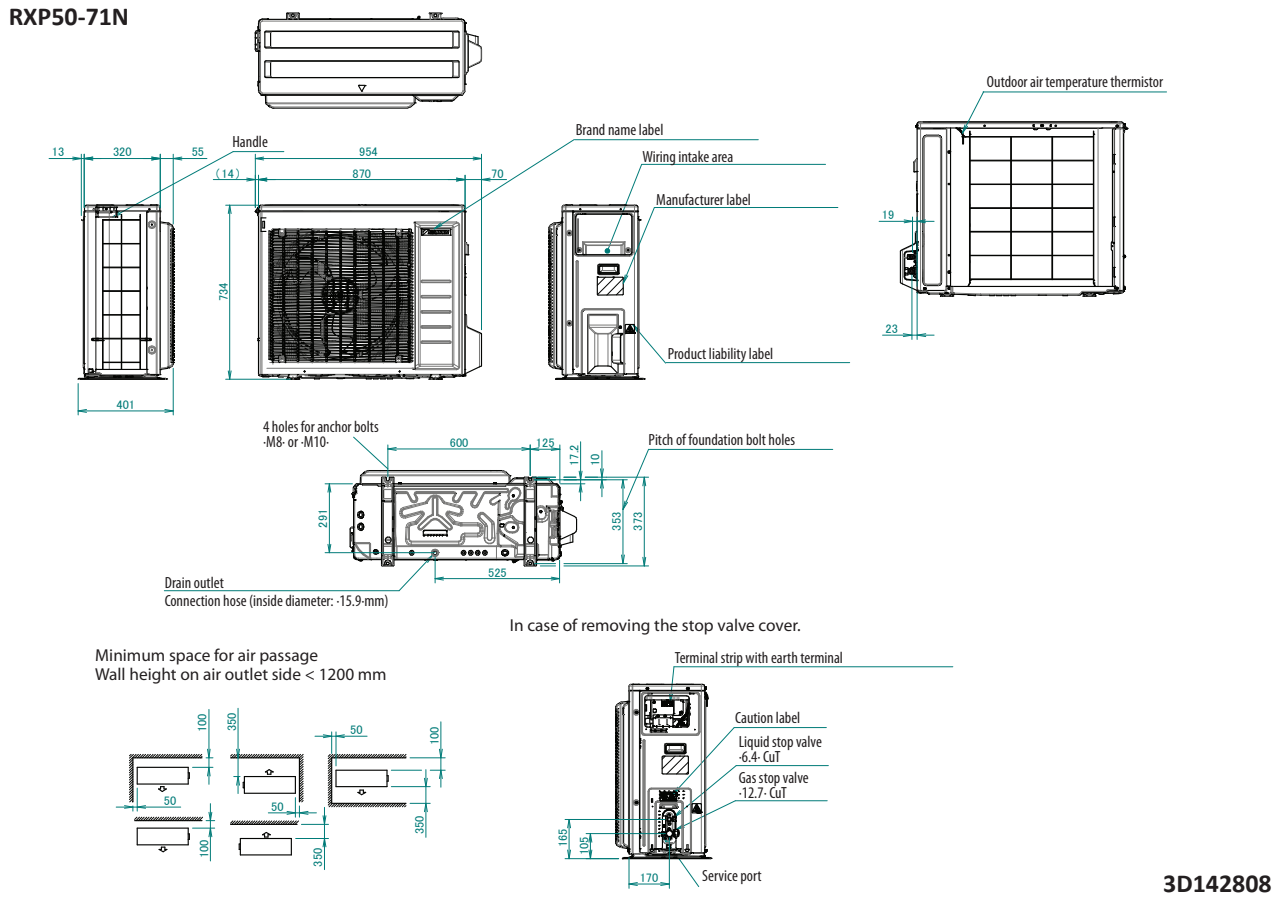

3D142808

6 Centre of gravity

6 - 1 Centre of Gravity

RXP20-25N

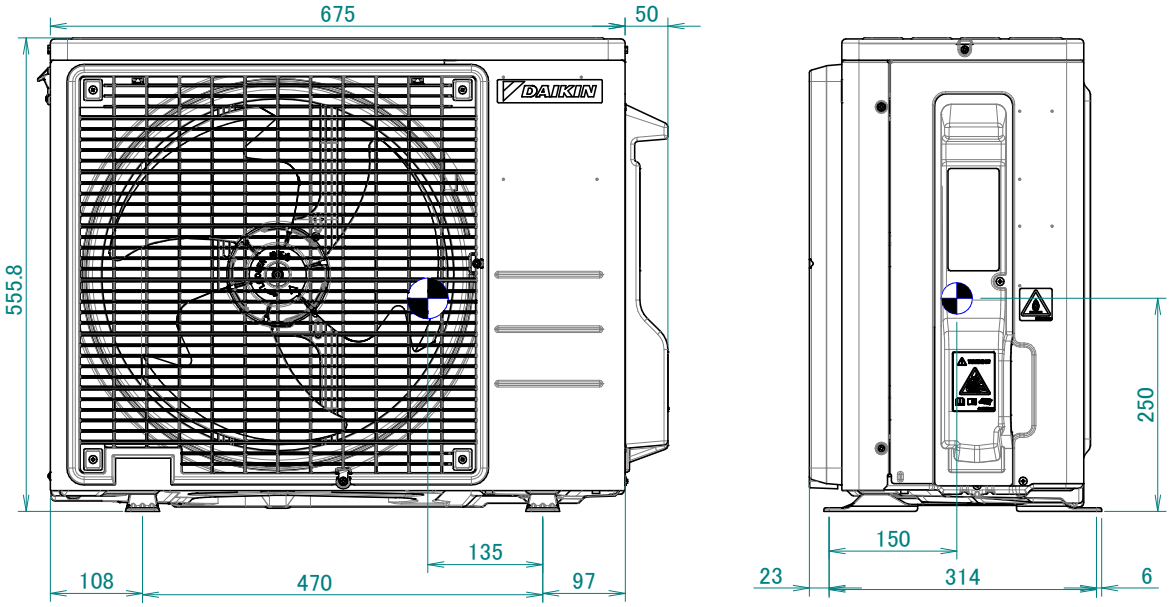

4D144283

RXP35N

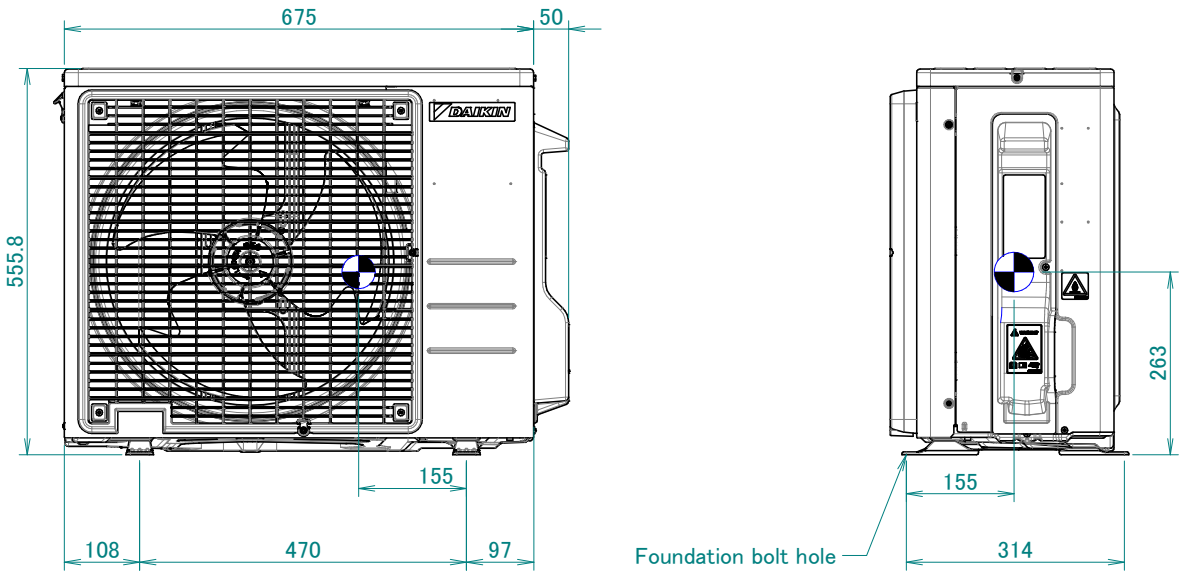

4D144284A

6 Centre of gravity

6 - 1 Centre of Gravity

RXP50N

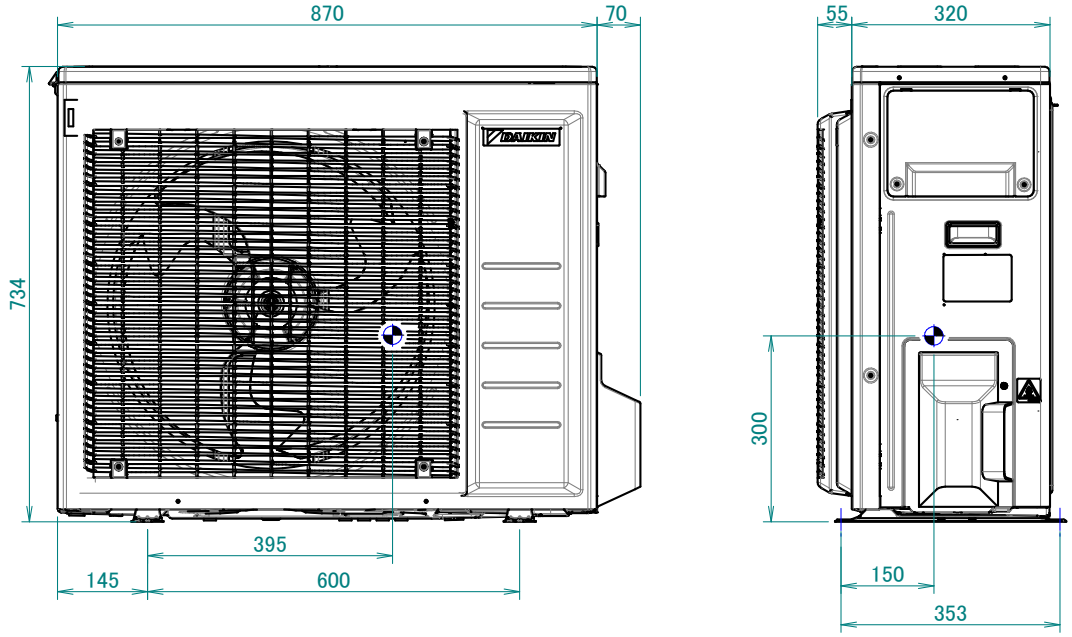

4D142792

RXP60-71N

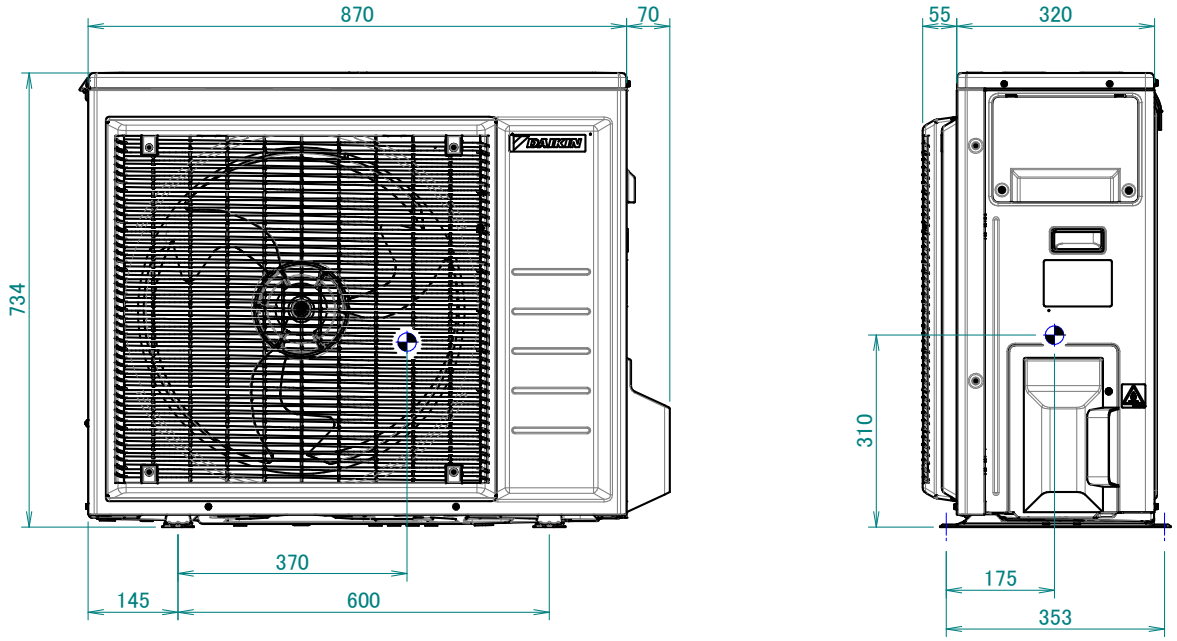

4D142789

7 Piping diagrams

7 - 1 Piping Diagrams

RXP20-25N

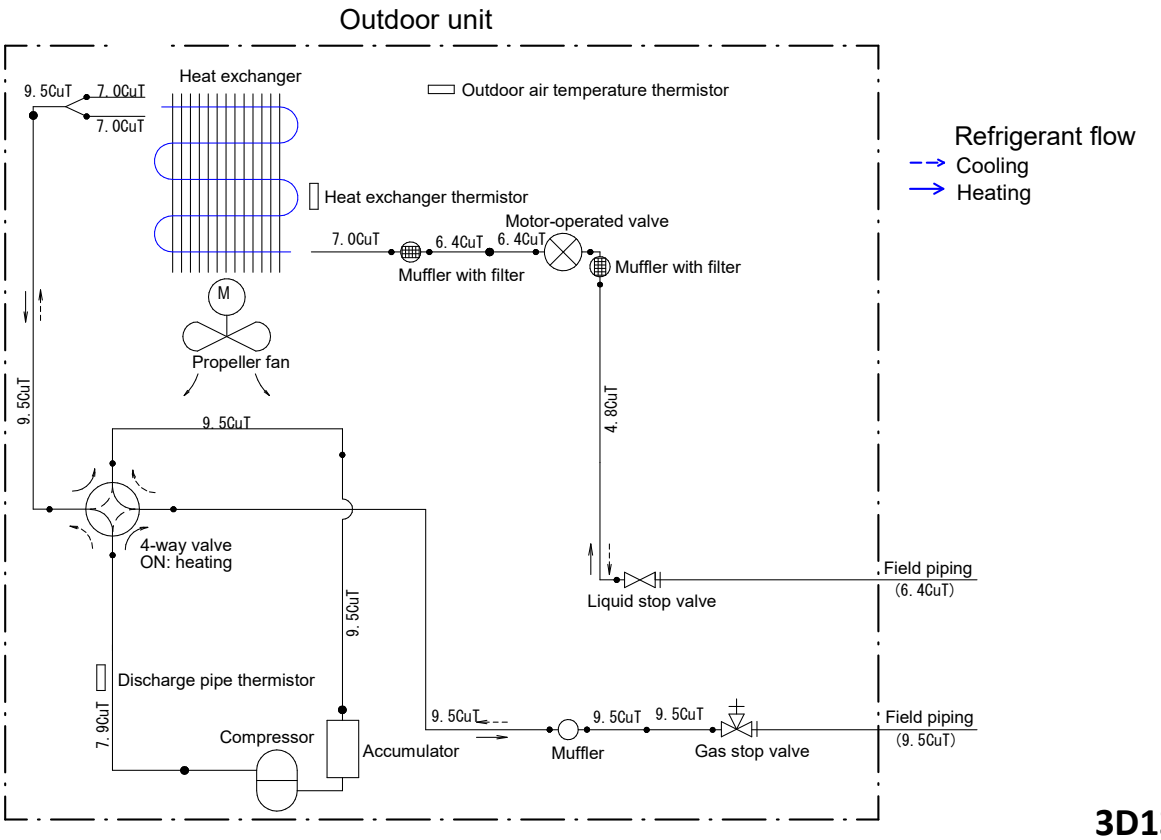

3D136644

RXP35N

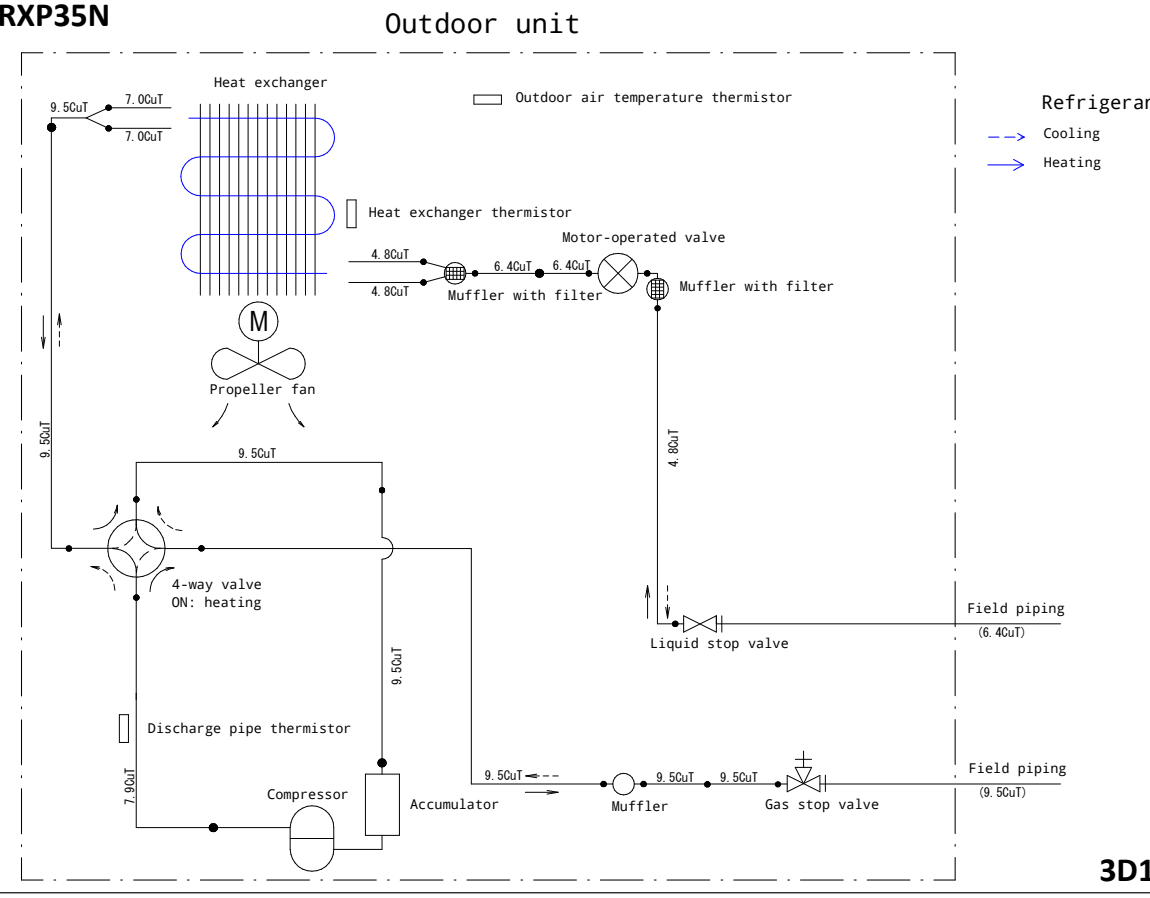

3D143574

7 Piping diagrams

7 - 1 Piping Diagrams

RXP50N

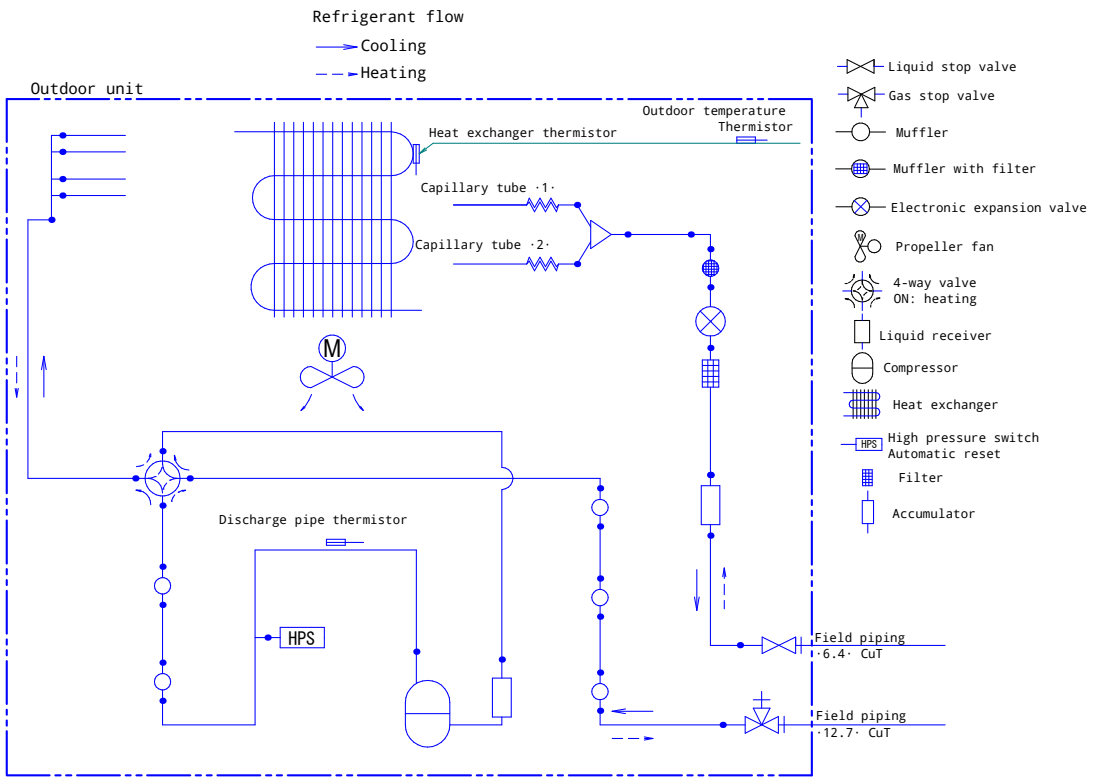

3D114451A

RXP60-71N

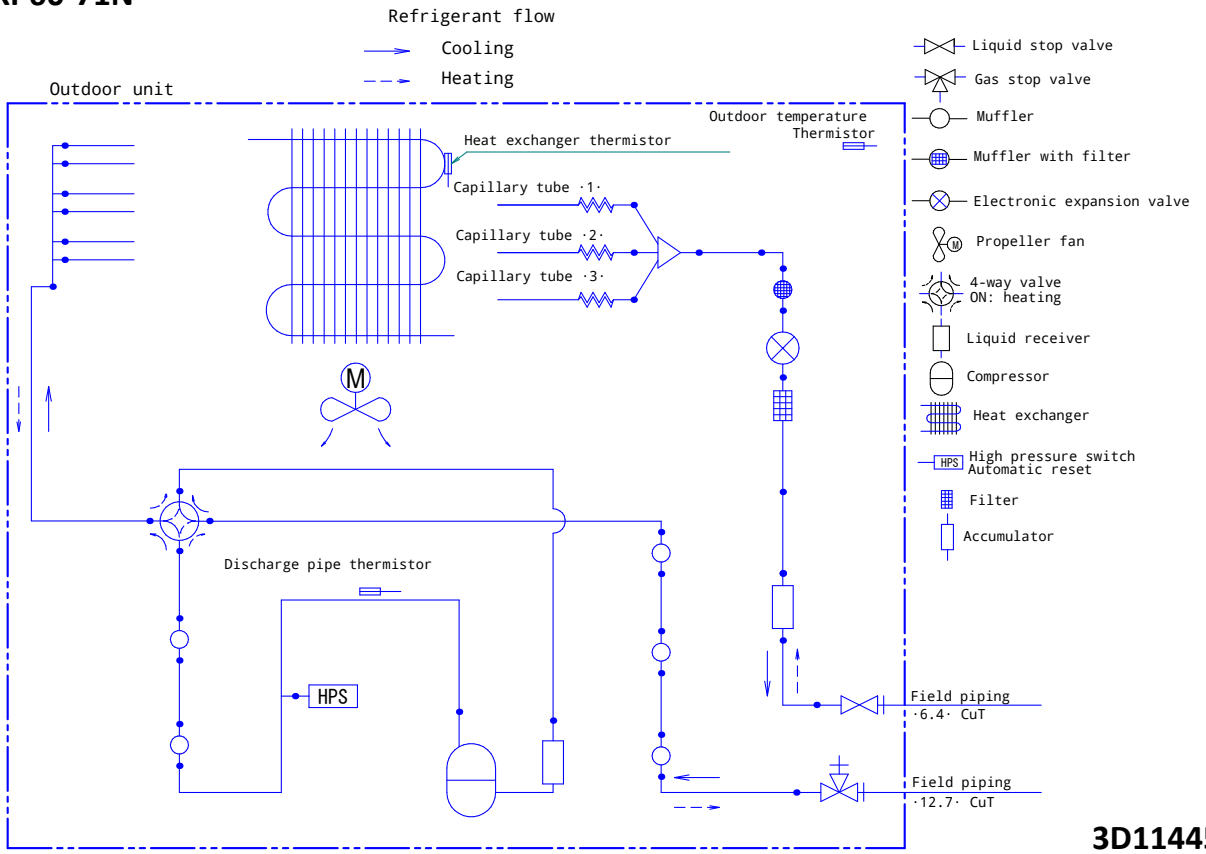

3D114450A

8 Wiring diagrams

8 - 1 Wiring Diagrams - Three Phase

8

RXP20-35N

Wiring diagram

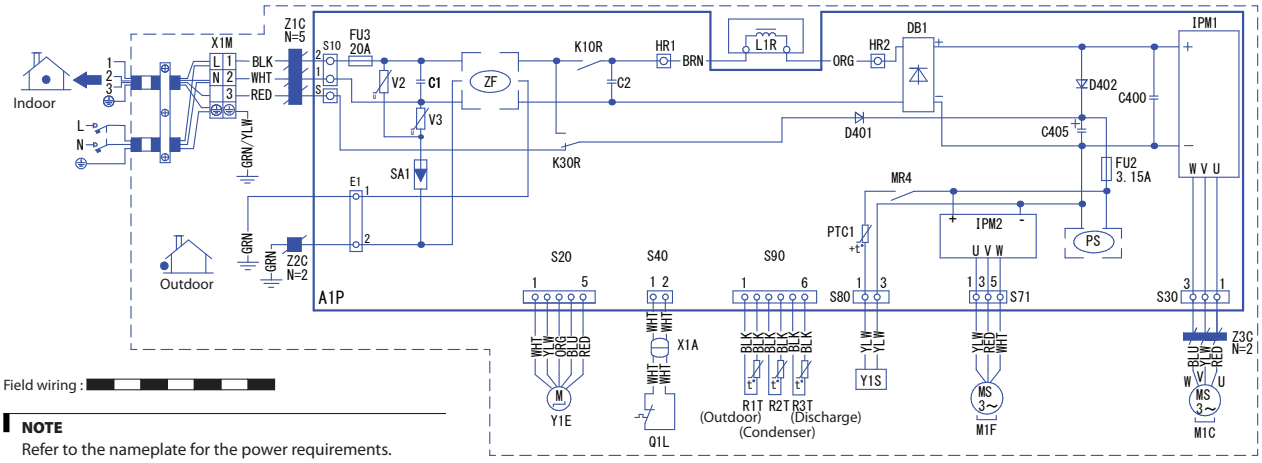

NOTE

Refer to the nameplate for the power requirements.

Wire colors

BLK : Black
WHT : White
BRN : Brown
RED : Red
GRN : Green
YLW : Yellow
ORG : Orange
BLU : Blue

C1, C2, C400, C405	Capacitor
D401, D402	Diode
DB1	Diode bridge
FU2, FU3	Fuse
IPM1, IPM2	Intelligent power module
L1R	Reactor
M1C	Compressor motor
M1F	Fan motor
K30R, K10R, MR4	Magnetic relay
A1P	Printed circuit board
PS	Switching power supply
Q1L	Overload protector
R1T, R2T, R3T	Thermistor

SA1	Surge arrester
S, S10, S20, S30, S40, S71, S80, S90, E1, HR1, HR2, X1A	Connector
V2, V3	Varistor
X1M	Terminal strip
Y1S	Reversing solenoid valve coil
PTC1	Thermistor PTC
Y1E	Electronic expansion valve coil
Z1C, Z2C, Z3C	Ferrite core
ZF	Noise filter
⊕	Protective earth
⏚	Earth

NOTES

1. Size : lenght 140 x height 80
2. Refer to purchasing specification AS303002, unless otherwise specified.
3. This drawing was drawn on cad system.
4. Refer to the "cad03919-3d134368-1-wiring-diagram-210406.ai" formatted file unless otherwise specified.

3D134368

RXP50-71N

Wiring diagram

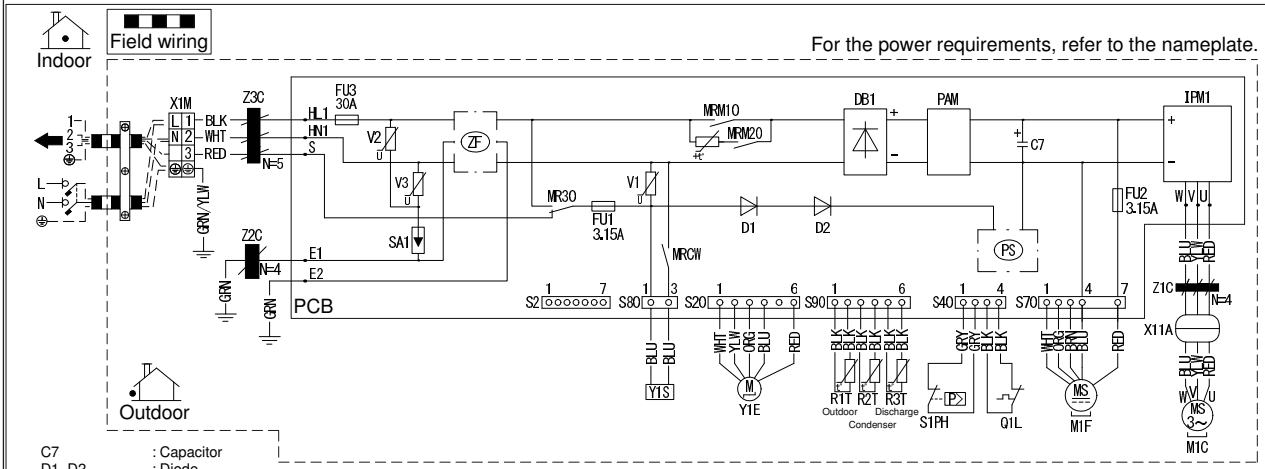

C7	: Capacitor
D1, D2	: Diode
DB1	: Diode bridge
E1, E2, HL1,	
HN1,S, U, V, W	: Connection
FU1, FU2, FU3	: Fuse
IPM1	: Intelligent power module
L	: Live
M1C	: Compressor motor
M1F	: Fan motor
MR30, MRCW,	
MRM10, MRM20	: Magnetic relay
N	: Neutral
N=4, N=5	: Number of passes
PAM	: Pulse-amplitude modulation
PCB	: Printed circuit board
PS	: Switching power supply
Q1L	: Overload protector
R1T, R2T, R3T	: Thermistor
S1PH	: High pressure switch
S2, S20, S40,	
S70, S80, S90	: Terminal connector
SA1	: Surge arrestor
V1, V2, V3	: Varistor
X11A	: Connector
X1M	: Terminal strip
Y1E	: Electronic expansion valve coil
Y1S	: Reversing solenoid valve coil
Z1C, Z2C, Z3C	: Ferrite core
ZF	: Noise filter
⊕	: Earth
⏚	: Protective earth

BLK : Black
BLU : Blue
BRN : Brown
GRN : Green
GRY : Grey
ORG : Orange
RED : Red
WHT : White
YLW : Yellow

3D114452A

9 Sound data

9 - 1 Sound Pressure Spectrum

RXP20N

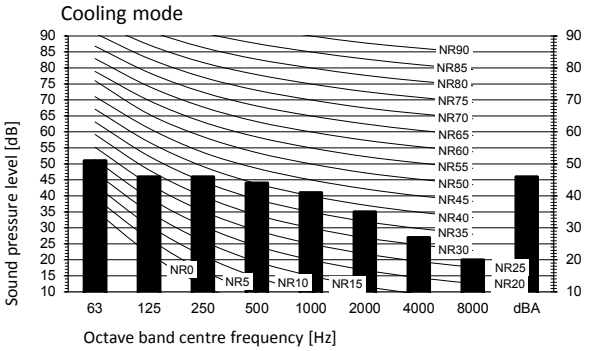

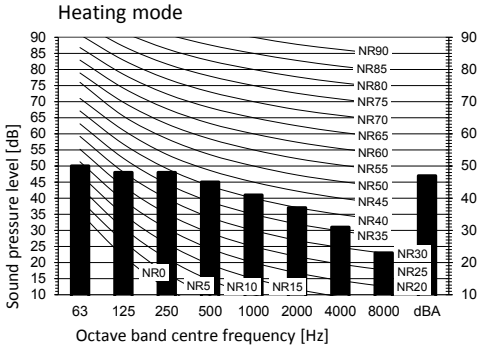

Legend

dBA = A-weighted sound pressure level (A scale according to IEC).

A Scale

B High Fan speed

Location of microphone

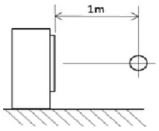

Cooling	Total dB
A	B
dBA	46

Heating	Total dB
A	B
dBA	47

Notes

1. Operating conditions: power source 220-240 V/220 V 50/60 Hz; JIS standard
2. Background noise already taken into account.
3. Operating noise varies depending on operation and ambient conditions.
4. The operation noise measuring method is in accordance with JISC9612.
5. Measuring location: anechoic chamber

3D092072D

RXP25N

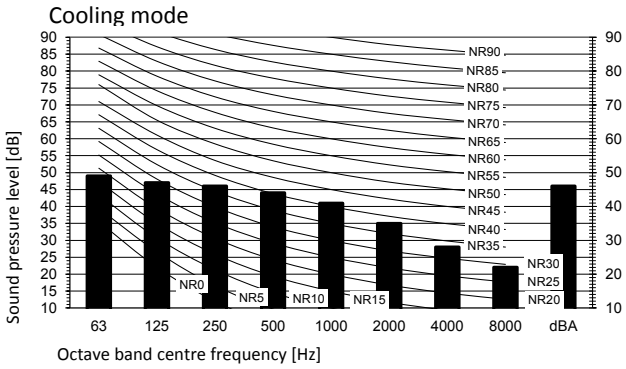

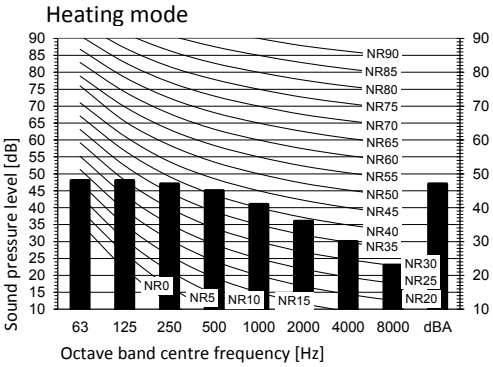

Legend

dBA = A-weighted sound pressure level (A scale according to IEC).

A Scale

B High Fan speed

Location of microphone

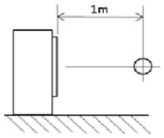

Cooling	Total dB
A	B
dBA	46

Heating	Total dB
A	B
dBA	47

Notes

1. Operating conditions: power source 220-240 V/220 V 50/60 Hz; JIS standard
2. Background noise already taken into account.
3. Operating noise varies depending on operation and ambient conditions.
4. The operation noise measuring method is in accordance with JISC9612.
5. Measuring location: anechoic chamber

3D092073D

9 Sound data

9 - 1 Sound Pressure Spectrum

RXP35N

Cooling mode

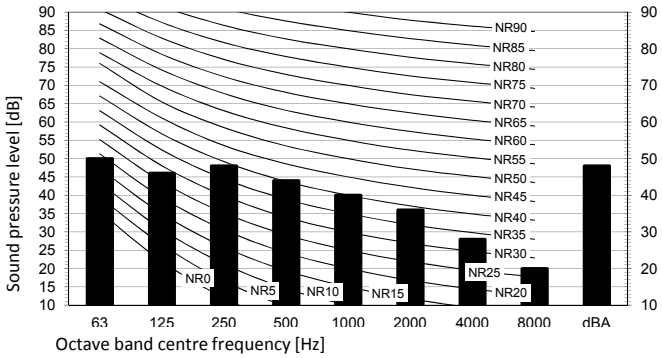

Heating mode

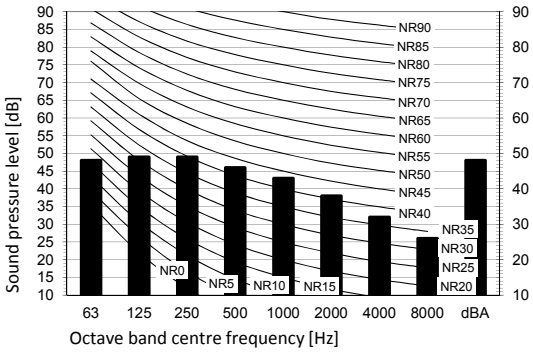

Legend

dBA = A-weighted sound pressure level (A scale according to IEC).

A Scale

B High Fan speed

Location of microphone

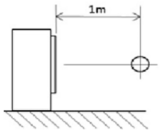

Cooling Total dB

A	B
dBA	48

Heating Total dB

A	B
dBA	48

Notes

1. Operating conditions: power source 220-240 V/220 V 50/60 Hz; JIS standard
2. Background noise already taken into account.
3. Operating noise varies depending on operation and ambient conditions.
4. The operation noise measuring method is in accordance with JISC9612.
5. Measuring location: anechoic chamber

3D092074D

RXP50N

Cooling mode

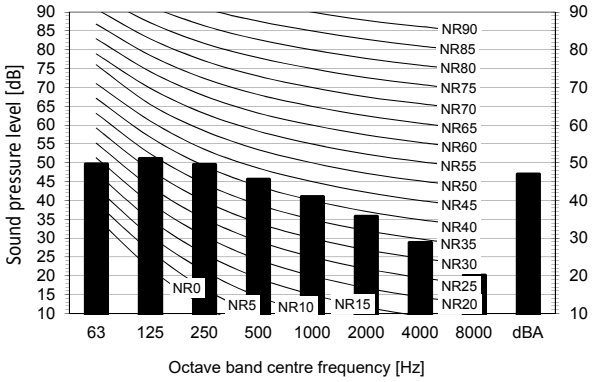

Heating mode

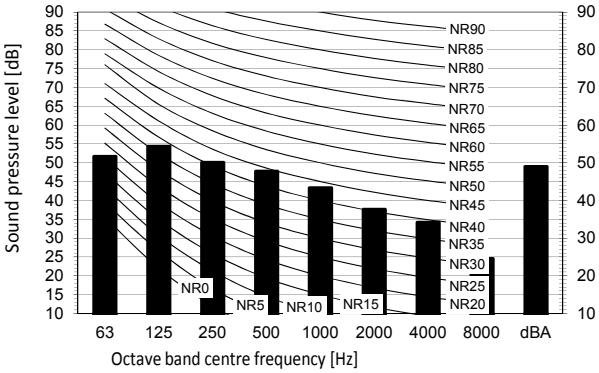

Legend

dBA = A-weighted sound pressure level (A scale according to IEC).

A Scale

B Fan speed: High

Location of microphone

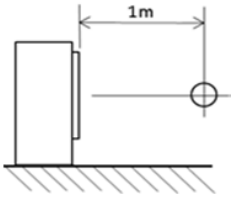

Cooling Total dB

A	B
dBA	47

Heating Total dB

A	B
dBA	49

Notes

1. Operating conditions: power source 220-240 V 50 Hz; JIS standard
2. Background noise already taken into account.
3. Operating noise varies depending on operation and ambient conditions.
4. The operation noise measuring method is in accordance with JISC9612.
5. Measuring location: anechoic chamber

3D115238A

9 Sound data

9 - 1 Sound Pressure Spectrum

RXP60N

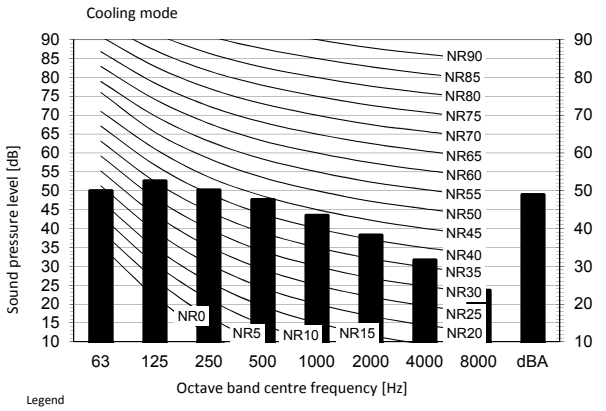

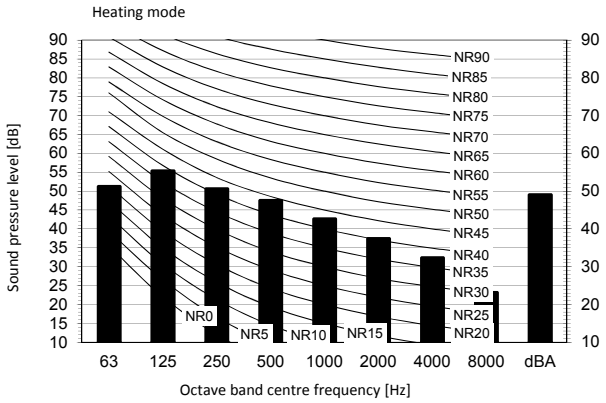

Legend

dBA = A-weighted sound pressure level (A scale according to IEC).

A Scale

B Fan speed: High

Location of microphone

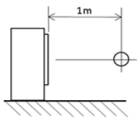

Cooling	Total dB
A	B
dBA	49

Heating	Total dB
A	B
dBA	49

Notes

1. Operating conditions: power source 220-240 V 50 Hz; JIS standard
2. Background noise already taken into account.
3. Operating noise varies depending on operation and ambient conditions.
4. The operation noise measuring method is in accordance with JISC9612.
5. Measuring location: anechoic chamber

3D115239A

RXP71N

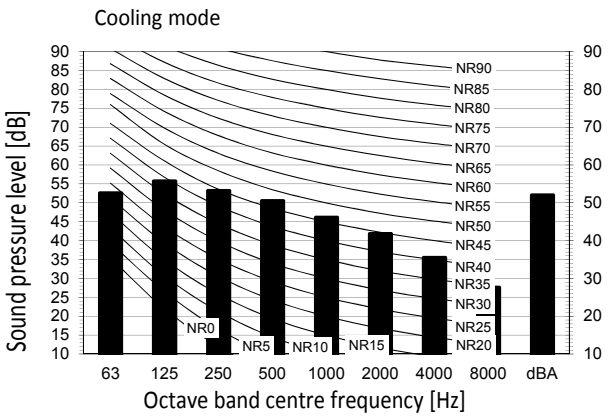

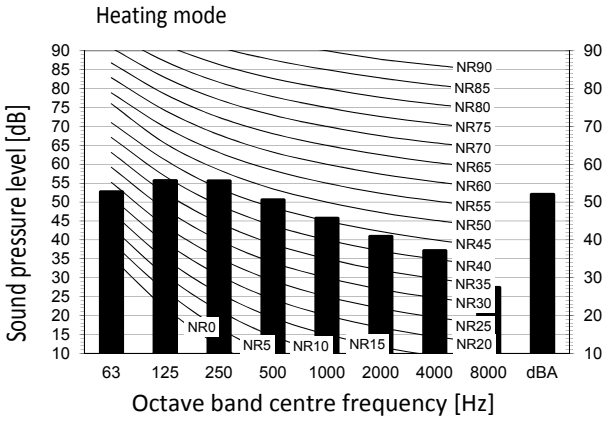

Legend

dBA = A-weighted sound pressure level (A scale according to IEC).

A Scale

B Fan speed: High

Location of microphone

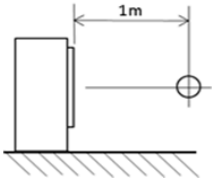

Cooling	Total dB
A	B
dBA	52

Heating	Total dB
A	B
dBA	52

Notes

1. Operating conditions: power source 220-240 V 50 Hz; JIS standard
2. Background noise already taken into account.
3. Operating noise varies depending on operation and ambient conditions.
4. The operation noise measuring method is in accordance with JISC9612.
5. Measuring location: anechoic chamber

3D115240A

10 Operation range

10 - 1 Operation Range

10

RXP-N

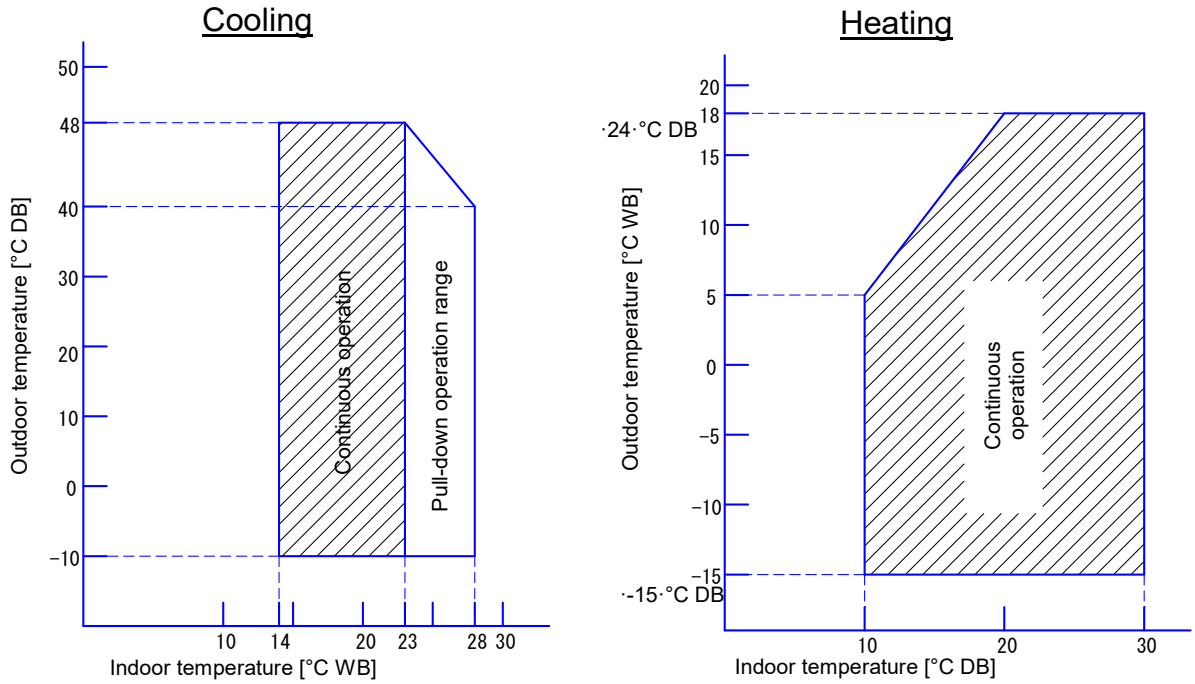

Notes

1.The ·graphs· are based on the following conditions.

Corresponding refrigerant piping length: ·5· m

Level difference: ·0·m

Air flow rate High

3D669693A

Daikin Europe N.V. Naamloze Vennootschap · Zandvoordestraat 300 · 8400 Oostende · Belgium · www.daikin.eu · BE 0412 120 336 · RPR Oostende (Responsible Editor)

Daikin Europe N.V. participates in the ECP programmes for Fan Coil Units and Variable Refrigerant Flow systems. Daikin Applied Europe S.p.A. participates in the ECP programmes for Liquid Chilling Packages and Hydronic Heat Pumps. Check ongoing validity of certificate: www.eurovent-certification.com

EEDEN23 01/2023

The present leaflet is drawn up by way of information only and does not constitute an offer binding upon Daikin Europe N.V.. Daikin Europe N.V. has compiled the content of this leaflet to the best of its knowledge. No express or implied warranty is given for the completeness, accuracy, reliability or fitness for particular purpose of its content and the products and services presented therein. Specifications are subject to change without prior notice. Daikin Europe N.V. explicitly rejects any liability for any direct or indirect damage, in the broadest sense, arising from or related to the use and/or interpretation of this leaflet. All content is copyrighted by Daikin Europe N.V.