Air Conditioning | Product Information

MITSUBISHI ELECTRIC

PUZ-M200/250YKA R32

High Capacity Outdoor Units

Standard Inverter Heat Pump

Mr.SLIM™

Our high capacity Standard Inverter outdoor units provide excellent system flexibility at a value price point.

Connectability to 2, 3 or 4 Mr Slim indoor units allows for great coverage in large open areas, such as retail units, gyms and halls.

R32

Key Features & Benefits:

- Connectable to up to 4 cassette, wall mount, ducted or ceiling suspended units
- Generous coverage with up to 70m pipe runs
- Maximum design flexibility due to 30m height difference between outdoor unit & indoor units
- Utilises lower GWP R32 refrigerant

Air Conditioning | Product Information

PUZ-M200/250YKA R32

High Capacity Outdoor Units
Standard Inverter Heat Pump

R32

PUZ-M200/250YKA OUTDOOR UNITS		PUZ-M200YKA	PUZ-M250YKA
Capacity (kW)	Heating (nominal)	22.4	27.0
	Cooling (nominal)	19.0	22.0
SCOP (nsh) / SEER (nsc) (BS EN14825)*1		4.20 (165%) / 7.01 (277.3%)	4.18 (164.3%) / 7.04 (278.6%)
SOUND PRESSURE LEVEL (dBA)	Heating/Cooling	60 / 58	62 / 59
WEIGHT (kg)		129	138
DIMENSIONS (mm)	Width x Depth x Height	1050 x 330+40 x 1338	1050 x 330+40 x 1338
PIPE SIZE mm (in)	Gas	28.58 (1 1/8")	28.58 (1 1/8")
	Liquid	9.52 (3/8")	12.7 (1/2")
ELECTRICAL SUPPLY		380-415v, 50Hz	380-415v, 50Hz
PHASE		Three	Three
SYSTEM POWER INPUT (kW)	Heating/Cooling (nominal)	5.93 / 5.21	7.78 / 6.84
	Heating/Cooling (UK)	5.34 / 4.32	7.00 / 5.67
STARTING CURRENT (A)		5	5
SYSTEM RUNNING CURRENT (A)	Heating/Cooling [MAX]	10.08 / 9.62 [22.5]	12.18 / 11.22 [22.5]
FUSE RATING (BS88) - HRC (A)		25	25
MAINS CABLE No. CORES		5	5
MAX PIPE LENGTH (m)		70	70
MAX HEIGHT DIFFERENCE (m)		30	30
CHARGE REFRIGERANT (kg) / CO_2 EQUIVALENT (t)	R32 (GWP 675) - 30m	5.6 / 3.78	6.8 / 4.59
MAX ADDITIONAL REFRIGERANT (kg) / CO_2 EQUIVALENT (t)	R32 (GWP 675)	1.6 / 1.08	2.4 / 1.62

*1 PUZ-M200YKA connected to 2 x PLA-M100EA, PUZ-M250YKA connected to 2 x PLA-M125EA

PUZ-M200/250YKA DIMENSIONS

UPPER VIEW

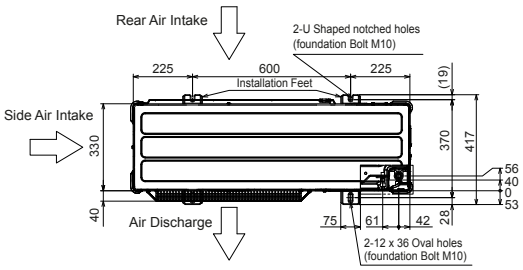

Model	① Refrigerant GAS pipe connection	② Refrigerant LIQUID pipe connection
PUZ-M200YKA	ø19.05 (3/4F)	ø9.52 (3/8F)
PUZ-M250YKA	ø19.05 (3/4F)	ø12.7 (1/2F)
PUHZ-P200YKA3.UK	ø19.05 (3/4F)	ø9.52 (3/8F)
PUHZ-P250YKA3.UK	ø19.05 (3/4F)	ø12.7 (1/2F)

※1···Indication of Terminal connection location.
※2···Refrigerant GAS pipe connection (BRAZING) O.Dø25.4.
※3···Indication of STOP VALVE connection location.

FRONT VIEW

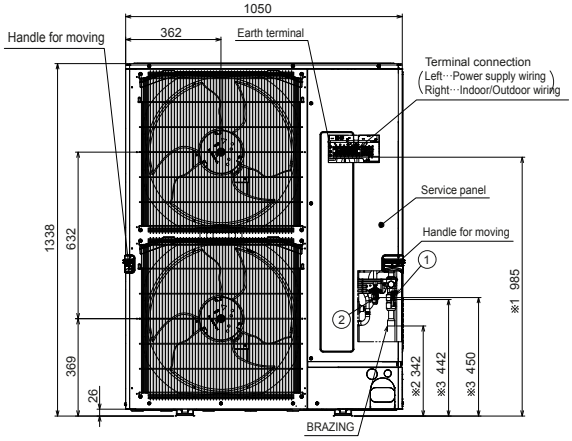

SIDE VIEW

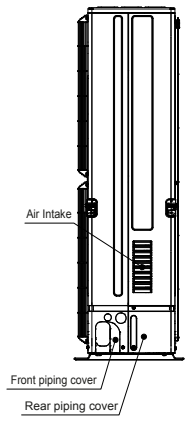

MITSUBISHI ELECTRIC
Changes for the Better

Telephone: **01707 282880**
email: **air.conditioning@meuk.mee.com**
les.mitsubishielectric.co.uk

@meuk_les @green_gateway | Mitsubishi Electric Living Environmental Systems UK | Mitsubishi Electric Cooling and Heating UK | mitsubishielectricuk_les | Mitsubishi Electric Living Environmental Systems UK | BLOG thehub.mitsubishielectric.co.uk

UNITED KINGDOM Mitsubishi Electric Europe Living Environment Systems Division, Travellers Lane, Hatfield, Hertfordshire, AL10 8XB, England. Telephone: 01707 282880 Fax: 01707 278881
IRELAND Mitsubishi Electric Europe, Westgate Business Park, Ballymount, Dublin 24, Ireland. Telephone: (01) 419 8800 Fax: (01) 419 8890 International code: (003531)

Country of origin: United Kingdom - Japan - Thailand - Malaysia. ©Mitsubishi Electric Europe 2020. Mitsubishi and Mitsubishi Electric are trademarks of Mitsubishi Electric Europe B.V. The company reserves the right to make any variation in technical specification to the equipment described, or to withdraw or replace products without prior notification or public announcement. Mitsubishi Electric is constantly developing and improving its products. All descriptions, illustrations, drawings and specifications in this publication present only general particulars and shall not form part of any contract. All goods are supplied subject to the Company's General Conditions of Sale, a copy of which is available on request. Third-party product and brand names may be trademarks or registered trademarks of their respective owners.

Note: The fuse rating is for guidance only. Please refer to the relevant databook for detailed specification. It is the responsibility of a qualified electrician/electrical engineer to select the correct cable size and fuse rating based on current regulation and site specific conditions. Mitsubishi Electric's air conditioning equipment and heat pump systems contain a fluorinated greenhouse gas, R410A (GWP:2088), R32 (GWP:675), R407C (GWP:1774), R134a (GWP:1430), R513A (GWP:631), R454B (GWP:466), R1234ze (GWP:7) or R1234yf (GWP:4). *These GWP values are based on Regulation (EU) No 517/2014 from IPCC 4th edition. In case of Regulation (EU) No.626/2011 from IPCC 3rd edition, these are as follows. R410A (GWP:1975), R32 (GWP:550), R407C (GWP:1650) or R134a (GWP:1300).

Effective as of May 2020

Green Gateway greengateway.mitsubishielectric.co.uk