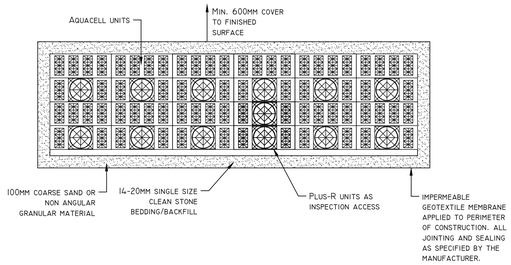

SECTION A-A
TYPICAL SECTION THROUGH ATTENUATION TANK
1:25 @ A1
1:50 @ A3
UNITS TO BE INSTALLED IN ACCORDANCE WITH WAVIN DETAILS

REFER TO DRAWING J8728/DR01 FOR DRAINAGE GENERAL ARRANGEMENT AND DRAWING J8728/DR02 FOR GENERAL DETAILS

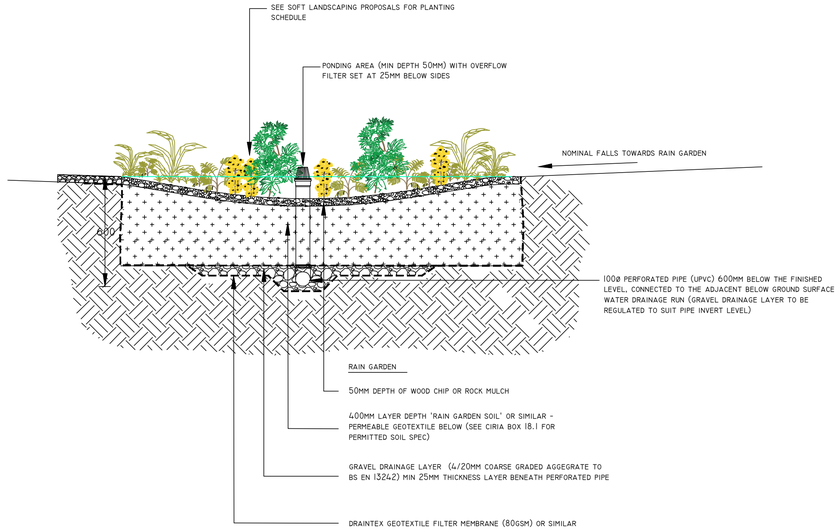

TYPICAL RAIN GARDEN DETAIL
N.T.S

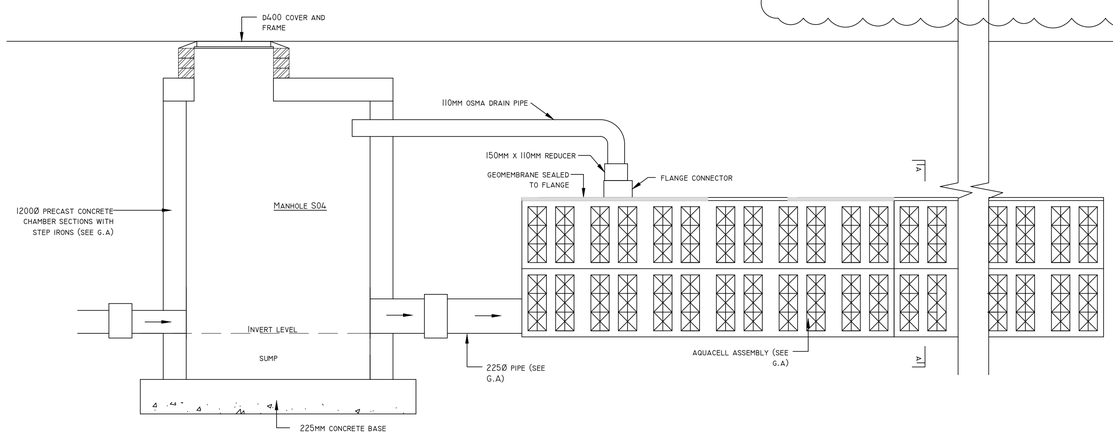

ATTENUATION DETAIL
N.T.S

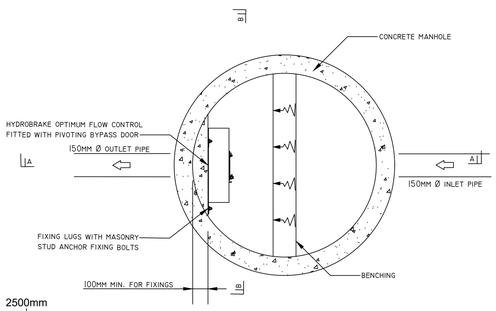

0 500 1000 1500 2000 2500mm
SCALE 1:25 AT A1
0 1 2 3 4 5m
SCALE 1:50 AT A3

TYPICAL HYDROBRAKE MANHOLE PLAN
N.T.S

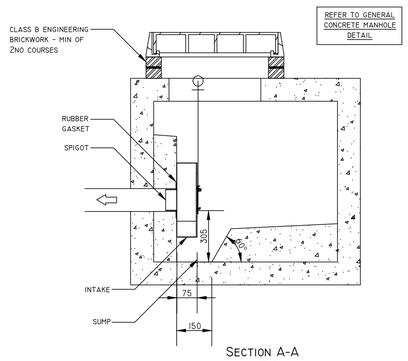

SECTION A-A
N.T.S

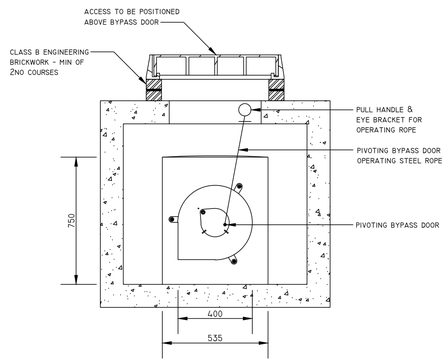

SECTION B-B
N.T.S

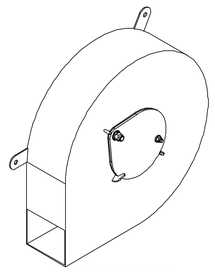

UNIT DEPTH = 75MM
UNIT WIDTH = 400MM
UNIT OUTLET DIAMETER = 66MM

HYDRO-BRAKE DETAIL
N.T.S.

GENERAL NOTES:

1. THIS DRAWING IS COPYRIGHT AND THE PROPERTY OF BELL MUNRO CONSULTING LTD. THE DRAWING MUST NOT BE REPRODUCED IN PART OR IN WHOLE WITHOUT PRIOR WRITTEN AUTHORITY.

2. THIS DRAWING MUST NOT BE USED FOR SETTING OUT. ANY DISCREPANCIES ARE TO BE REPORTED TO BELL MUNRO CONSULTING PRIOR TO CONSTRUCTION / FABRICATION COMMENCING.

3. THIS DRAWING MUST BE READ IN CONJUNCTION WITH THE RELEVANT BMC SPECIFICATIONS TOGETHER WITH THE APPROPRIATE ARCHITECTS AND SERVICES CONSULTANTS DRAWINGS AND SPECIFICATIONS.

4. TEMPORARY STABILITY DURING CONSTRUCTION IS THE RESPONSIBILITY OF THE MAIN CONTRACTOR AND SHOULD BE ASSESSED ACCORDINGLY.

DRAINAGE NOTES

1. PLASTIC PIPES (PVC-U)TO BE FLEXIBLY JOINTED AND COMPLY WITH THE REQUIREMENTS OF BS EN 1401-1 1998.

2. WHERE COVER TO PIPES IS LESS THAN 900 IN ROADS AND HARDSTANDINGS OR 400 MM ELSEWHERE, CLASS Z BEDDING IS TO BE PROVIDED IN ACCORDANCE WITH THE DETAIL.

3. N.B. UNTIL FINAL SERVICE IS PLACED, HEAVY TRAFFIC IS NOT TO BE ALLOWED OVER PIPE TRENCHES WITHOUT SPECIAL PRECAUTIONS.

4. PIPES AND FITTINGS ARE TO BE LAID IN ACCORDANCE WITH THE MANUFACTURERS RECOMMENDATIONS.

5. MANHOLE COVERS IN CAR PARKS TO BE LOAD CLASS D400 TO BS EN 124.

6. MANHOLE COVERS IN LANDSCAPED AND PAVED AREAS TO BE LOAD CLASS B125 BS EN 124.

PLANNING

REV	COMMENTS	DATE	BY
B	RAIN GARDEN INCORPORATED	22/01/26	MB
A	UPDATED DISCHARGE RATE TO SUIT COMMENTS	16/01/26	MB
--	INITIAL ISSUE	24/04/25	RC

BMC

BELL MUNRO CONSULTING LTD

CONSULTING CIVIL & STRUCTURAL ENGINEERS
TURING HOUSE
5 ARCHWAY
MANCHESTER
M15 5RL
TEL: 0161 2098032
FAX: 0161 2098033
EMAIL: CONSULTING@BELLMUNRO.CO.UK
WWW.BELLMUNRO.CO.UK

CLIENT: CAPSTONE CONSTRUCTION (NW) LTD.

PROJECT: 816 STOCKPORT ROAD

TITLE: ATTENUATION DETAILS

DRAWN BY:	CHECKED BY:	SCALE:	DATE:
R.C	S.J.B	NTS	04/25

DRAWING NUMBER: J8728/D03

REVISION: B