APEX-22

Fast AC Single Outlet 22kW Tethered & Untethered Chargers

PROJECT EV

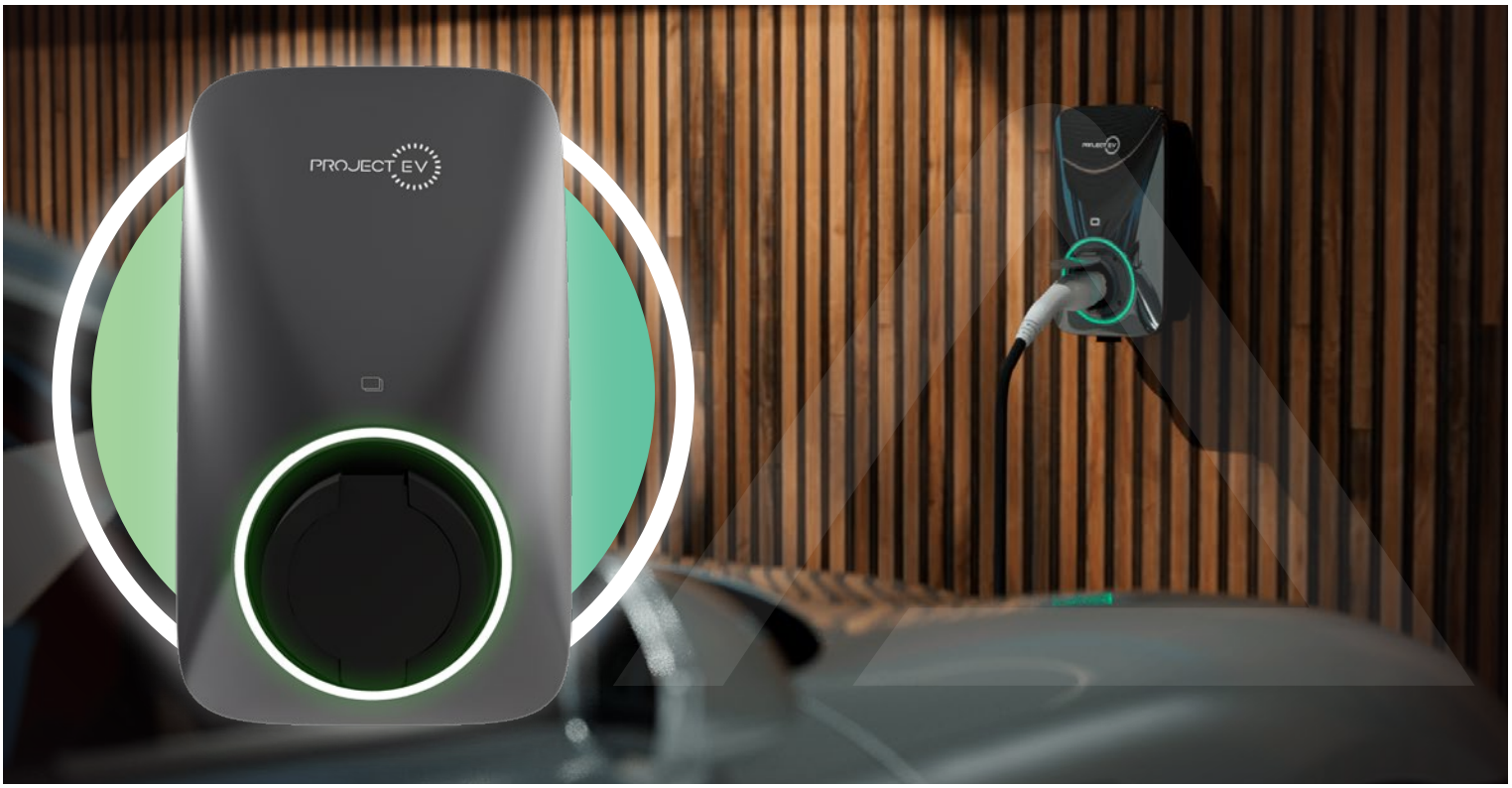

Pro Earth Pen Fault **Protection**

Featuring built-in pen fault protection as standard, our pro earth APEX EV charger eliminates the need for an earth spike upon installation, or carry out any costly ground-works.

WIFI & Bluetooth **Compatible**

The APEX features multiple connection options including WIFI, Bluetooth and 4G connectivity. Providing seamless & wireless communication access for your EV charger.

Intelligent **Solar**

Being fully solar compatible, utilise the power of the sun with APEX. Take advantage of green, solar energy by using the sun to power & charge your vehicle.

Intelligent Dynamic **Load Balancing**

With dynamic load balancing the APEX EV charger is able to intelligently adjust how much power it draws, allowing it to never draw too much power, but always operate at a happy optimum.

5 Year **Warranty***

With a market-leading 5-year warranty, APEX gives you the peace of mind, protection, and guarantee of high-quality after-care services for your EV charger.

Introducing a **World of Colour**

- Black Obsidian
- Ghost White
- Cherry Red
- Racing Green
- Nitrous Blue
- EV Steel

*APEX-22 chargers are 'EV Steel' colour as standard. Colour variations of the APEX-22 charger are available Q1 2024, and are subject to availability.

The APEX Smart App **Control Everything**

- Start, stop, & monitor your charging activity with one app.
- Prioritise off-peak charging.
- Manage and add multiple charge points to one master account.

Download the APEX App by Project EV, for smart app EV control. Available on both the Google Play and App Store.

Please Note - *APEX 5 year warranty is subjected to terms and conditions
*Please ensure this product is installed to meet all local regulations

APEX-22

22kW Tethered & Untethered
- Technical Specifications

PROJECT EV

	APEX-22S-T / APEX-22S-T-4G Tethered	APEX-22S / APEX-22S-4G Untethered
Input		
Wiring Scheme	3P+N+PE	3P+N+PE
Voltage	400Vac, ±20%	400Vac, ±20%
Maximum Current	32A	32A
Frequency	50/60Hz	50/60Hz
Output		
Voltage	400Vac, ±20%	400Vac, ±20%
Maximum Current	32A	32A
Rated Power	22kW	22kW
User Interface & Control		
Connector Type	Type 2 Cable	Type 2 Socket
Cable Length	5m	N/A
RFID Reader	Mifare ISO/IEC 14443 A	Mifare ISO/IEC 14443 A
Start Mode	Plug & Play/ RFID Card/ App	Plug & Play / RFID Card / App
Communication		
WiFi	Yes*	Yes*
Bluetooth	Yes	Yes
LAN	No	No
4G	4G on APEX-22S-T-4G Only	4G on APEX-22S-4G ONLY
OCPP	OCPP 1.6 JSON, OCPP 2.0.1 Optional	OCPP 1.6 JSON, OCPP 2.0.1 Optional

*Range capability up to 30m. Dependent on environment and charger location/surroundings.

Environment		
Installation	Wall-Mount / Post-Mount	Wall-mount / Post-mount
Operating Temperature	-30°C ~ 50°C	-30°C ~ 50°C
Operating Humidity	5% ~ 95% No Condensation	5% ~ 95% No condensation
Operating Altitude	≤2000m	≤2000m
Safety		
IP Protection Rating	IP65 (Socket IP54)	
IK Protection Rating	IK08	
Residual Current Detection	AC 30mA / DC 6mA* (Internal RCD-DD meets the trip time characteristics specified in IEC 62955)	
Over Current Protection	✓	
Residual Current Protection	✓	
Pro Earth Pen Fault Protection	✓	
Surge Protection	✓	
Over Voltage protection	✓	
Under Voltage Protection	✓	
Over Temperature Protection	✓	
Under Temperature Protection	✓	
Certification	CE, UKCA	
Certification Standard	EN/IEC 61851-1: 2019, EN/IEC 61851-21-2: 2021	

*Please ensure this product is installed to meet all local regulations.

Dimension And Weight		
Product Dimension	320*190*130 mm	320*190*144 mm
Product Weight	5.6kg	2.4kg
Product Colour Options*		

*APEX-7.3 chargers are 'EV Steel' colour as standard. Further colour options are available upon request, subject to availability.

Mounting & Accessories		
Floor Pole	Opt. APEX-SPOST	Opt. APEX-SPOST

*Line Drawings for Untethered Unit Only

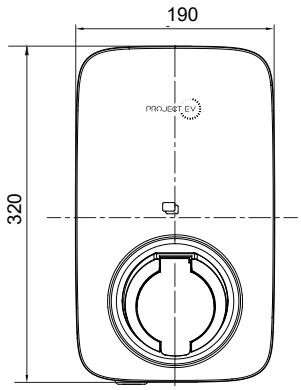

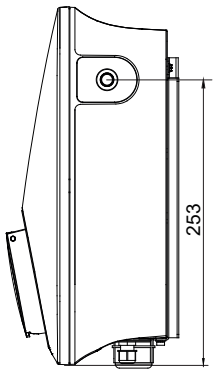

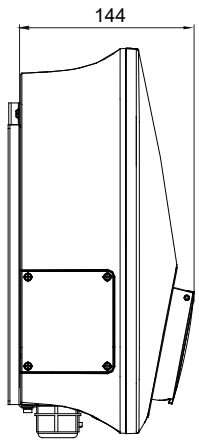

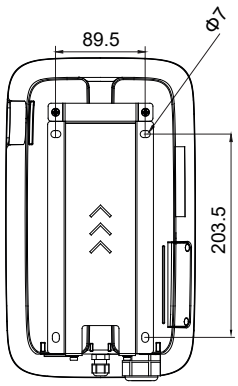

*Line Drawings for Untethered Unit Only

Please Note - *APEX 5 year warranty is subjected to terms and conditions
*Please ensure this product is installed to meet all local regulations