EN

G1 Solar Photovoltaic Panels

Clearline fusion

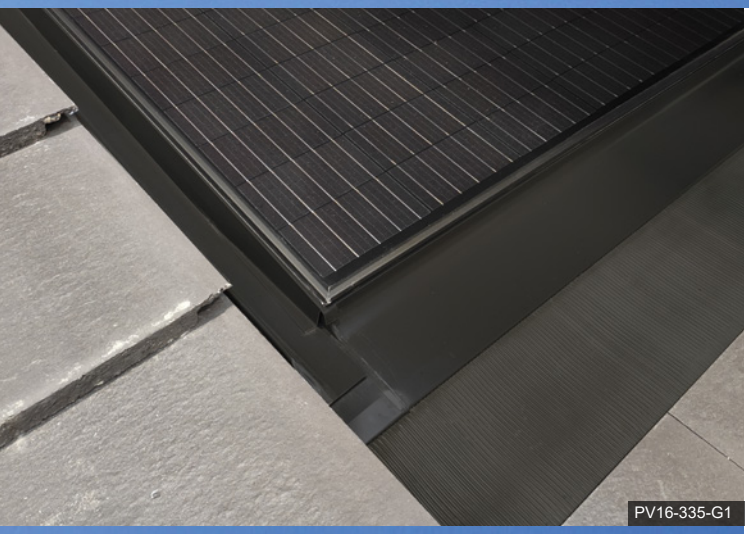

- Simple roof integration with clean, low-profile aesthetic for new build and retrofit
- Rapid installation times of less than 45 min/kWp easily achieved
- Compatible with the widest range of slate and tile including special fixings for different batten thickness
- Fitted during the normal roofing programme, enabling clarity of responsibility and safe working practices
- Achieves highest fire rating and wind resistance without modifications to the roof

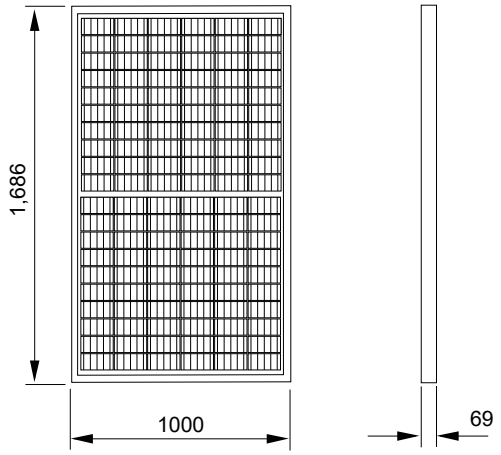

PV16-335-G1

PV16-340-G1W

Mechanical Specification

Model		PV16-xxx-G1
Aperture Area	m^2	1.622
Width	mm	1,000
Length	mm	1,686
Thickness	mm	69
Weight	kg	21.7
Static roof loading (distributed)	kg / m^2	12.9
Characteristic Wind Resistance	kPa	5.32
Ultimate Design Load [1]	kPa	5.32
Positive Design Load	IEC 61215	5.40
Roofing System Fire Rating	EN 13501-5	B_{ROOF} (T1, T2, T3, T4)
Power Warranty	% rated	90% 10 years, 80% 25 years
Product Warranty		15 years
Standards		IEC61215, 61730, TUV, MCS05 , MCS12, BBA
Structural Durability		Equivalent to roof structure

Electrical Specification

Model		Clearline fusion PV16-XXX-G1	
Peak Power [2]	Wp	335	340
Module Efficiency [3]	%	20.7	21.0
Number of Cells		60x2	60x2
Maximum Power Voltage (V_{mpp})	V	34.7	35.0
Maximum Power Current (I_{mpp})	A	9.7	9.7
Open Circuit Voltage (V_{oc})	V	42.0	42.4
Short Circuit Current (I_{sc})	A	10.3	10.4
NOCT [4]	°C	44.0	
Cell Type		Monocrystalline Silicon	
Power Temperature Coefficient	% / °C	-0.38	
Current Temperature Coefficient	% / °C	0.05	
Voltage Temperature Coefficient	% / °C	-0.30	
Maximum System Voltage	VDC	1,000	
Maximum Fuse Rating	A	20	
Safety Classification		Class 2	
Electrical Connectors		Genuine Stäubli MC4 PV-KST4, PV-KBT4	

I-V Curve

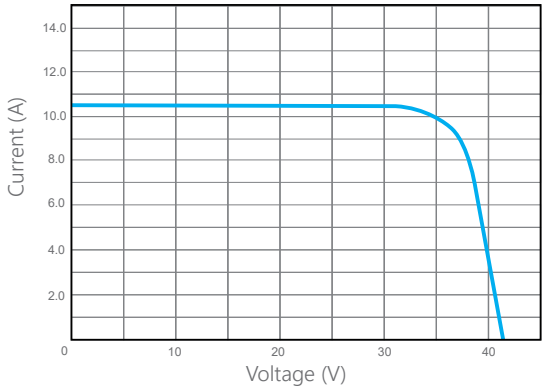

1 Design resistance to ultimate loads includes a partial material safety factor of 1.0
2 Subject to a manufacturing tolerance of +/- 3%.
3 Based on aperture area.
4 Nominal Operating Cell Temperature
Electrical specification measured under standard test conditions: Irradiation 1 kW/m^2 with light spectrum AM 1.5 and a cell temperature of 25°C.

© Viridian Solar Ltd. 2024. Not to be reproduced either wholly or in part without the express written permission of Viridian Solar Ltd.
Viridian has a policy of continuous improvement, and reserves the right to alter the specifications without notice. Viridian has made every effort to ensure the accuracy of information, but does not accept liability for any errors or omissions.

viridian solar ®

80047 2.1

G1 Solar Photovoltaic Panels

Clearline fusion

Pitched Roof Integration

Sleek, low-profile integrated solar that replaces the roof covering for an improved aesthetic and for simple roof maintenance, now at similar cost to above-roof panels. Simple, beautiful, durable.

Solar never looked so good.

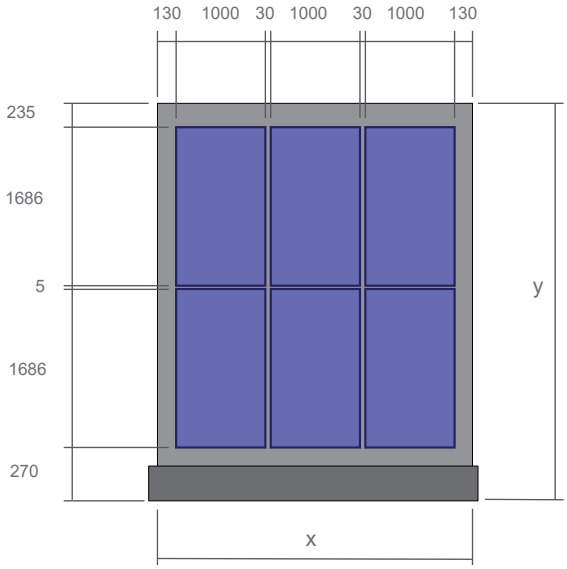

n x m

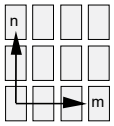

x = (m x 1030) + 230

y = (n x 1691) + 500

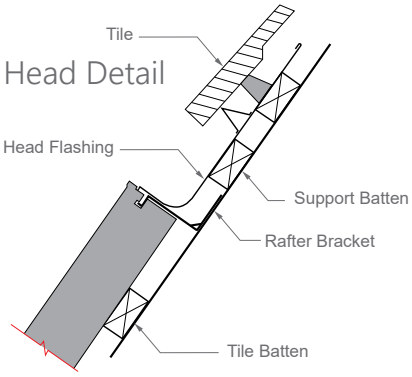

Head Detail

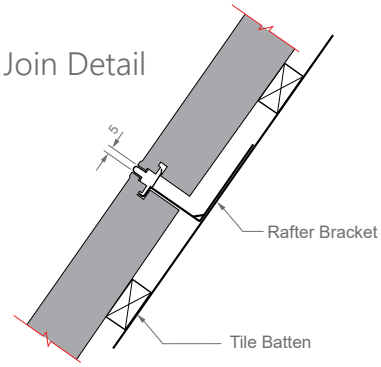

Join Detail

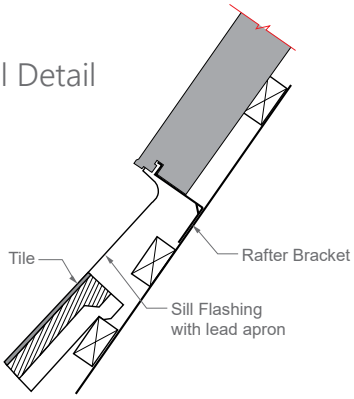

Sill Detail

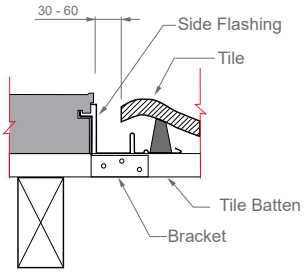

Side Detail

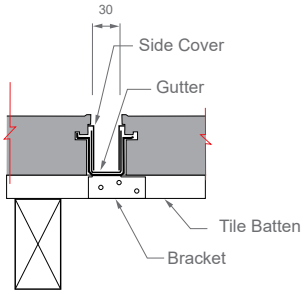

Gutter Detail
(joined flashings)

Viridian Solar, Atlas Building, 68 Stirling Way,
Papworth, Cambridge CB23 3GY

+44 1480 839 865
www.viridiansolar.com

viridian solar ®