MADE IN BRITAIN

Mercury Plus Package Pumping Station

Planet range

Below Ground Pump Station

User Information Manual

BBA APPROVAL INSPECTION TESTING CERTIFICATION
CERTIFICATE 06/4303

T-T DATA2056 21/06/2023

response@ttpumps.com +44 (0) 1630 647200 ttpumps.com

Contents

Introduction	3
About the Venus Plus package pumping station	4
Required tools for socket cut out	4
Safety Instructions	5
Transportation & Storage	7
Site Design	8
Product Receipt Check	8
Prior to Installation	8
Driveways & Roads	9
Concrete Specification	9
Civil Installation Guide - Pedestrian Area	10
Civil Installation Drawing	12
Optional Extension Turret Methodology	14
Fabricated Steel Covers - Fitting Instructions	17
Control System	18
Float Switch Adjustment	18
Electrical Connections	18
Part P Compliance	19
Commissioning of your Pumping Station	19
Operation, Maintenance & Safety Procedures	20
Impeller Rotation	20
Removal / Installation of pumping equipment	21
Hygiene	22
Regular Maintenance - Sewage Applications	22
Tank Dimensions	23
Fault Finding	24
Disposal	25

After Sales Support	25
Notes	26

Introduction

Thank you for selecting the **T-T Planet Range of Package Pumping Stations**. This Operation & Maintenance manual contains important product information, including the correct method of civil installation and precautions regarding its safe use.

When installed and maintained correctly, your pumping station should provide reliable operation over a long period. It is essential that regular maintenance, and if necessary, prompt repairs are carried out to ensure satisfactory and reliable operation. Therefore we urge you to use the T-T PUMPS Service Agreement system, for continued attention to your pumping station by T-T PUMPS Service Engineers.

Our products are manufactured to high standards at economic prices and are complemented by our warranty, which covers all items for 12 months from date of delivery or the date of commissioning, when T-T PUMPS is employed to commission the pumping station. We offer full after sales support for your pumping station for spares, repairs and servicing. For warranty claims please contact our Pumping Stations Department who will always give you a prompt response.

T-T Pumps Limited
Onneley Works
Newcastle Road
Woore
CW3 9RU

All inquiries made to T-T PUMPS in connection with this equipment should include these details, please complete upon receipt of your pumping system:-

T-T Pumps Contract Number:

Original Purchasers Name:

Customer order Number:

Pump Chamber:

Pump Type:

About the Mercury Plus Package Pumping Station

Our Mercury Plus package pumping station has been developed to provide a robust and cost-effective solution to larger, more expensive alternatives. It is an effective means for collecting and removing excess water and sewage.

The Mercury has been designed to suit a multitude of applications, including, but not limited to:

- Domestic Sewage situations
- Domestic Surface water situations
- Basement / Cavity Wall / Damp Drainage applications
- Small Domestic foul water applications, extensions, annexes etc
- Applications where access to mains drainage is not available via gravity means.

The tank is constructed from polyethylene, whilst the internal pipework, dependent on size, is generally made up of either ABS pipework and fittings, or ductile iron pipework and fittings. Stainless steel ancillary items are also used to provide long-lasting, corrosion resistance and give a high quality finish.

The fully automatic unit is designed and built for reliability and long life and employs a high performance pump range that can be selected to meet your specific application.

An optional extension turret kit can be provided to give the pumps and the tank greater frost protection by lowering the tank in external situations, and installation flexibility should ground levels change during the installation process.

The access covers provided are suitable for pedestrian loading only.

Required tools for socket cut out

To install the Ø160mm inlet pipes and Ø110mm cable ducts you will need the following equipment...

Cordless drill

138/140mm Hole Saw
DN160 inlet pipe socket
Turret gasket seal

89mm Hole Saw
DN100 cable duct socket

When drilling/cutting sockets, take care not to damage the pipe stops (highlighted orange)

Safety Instructions.

This is a **SAFETY ALERT SYMBOL.** When you see this symbol on the pump or in the manual, look for one of the following signal words and be alert to the potential for personal injury or property damage.

DANGER Warns of hazards that **WILL** cause serious personal injury, death, or major property damage.

CAUTION Warns of hazards that **CAN** cause serious personal injury, death, or major property damage.

WARNING Warns of hazards that **CAN** cause personal injury or property damage

Become thoroughly familiar with the instructions in the documents consigned with the pump(s). This will enable you to work in complete safety and to obtain the best performance the pump is able to offer.

The following instructions apply to the standard version of the electric pumps operating in normal conditions. Special versions, shown by the product code, may not fully comply with the instructions herein [when necessary, the manual will be supplemented with additional information].

As it is our policy to continually improve our products, the data in the documentation and the product itself may be subject to modification without the manufacturer being obliged to give advance warning.

WARNING

All electrical work must be performed by a qualified electrician to regulatory guidelines. Any queries should be directed to your local electrical inspector. Failure to follow regulatory guidelines and safety standards may result in personal injury or equipment damage. Failure to follow manufacturers installation instructions may result in electrical shock, fire hazard, personal injury or death, damaged equipment, provide unsatisfactory performance and may void manufacturer's warranty.

Disconnect and isolate electrical power before installing or servicing any electrical equipment. Many pumps are equipped with automatic thermal overload protection which may allow an overheated pump to restart unexpectedly.

Do not lift, carry, or hang pump by the electrical cables. Damage to the electrical cables can cause shock, burns or death.

Safety Instructions [cont.]

WARNING

Install the supply and connect the pump as per the regulatory guidelines.

The electrical supply voltage and phase must match all equipment requirements. Incorrect voltage or phase can cause fire, motor, and control damage, and voids the warranty.

Failure to permanently ground the pump, motor, and controls before connecting to power can cause shock, burns or death.

CAUTION

Where possible manual lifting should be avoided and mechanical lifting devices such as sack trucks or trolleys should be used whenever possible.

Please take note of the following important safety precautions:

- If the optional turret is ordered, lifting **must** be done by the tank neck, and **not** by the extension turret [if one supplied].
- Discharge connections MUST be correctly made to relevant fittings prior to use.
- All installation works must be carried out by competent trained person[s].
- Installers / maintainers should be aware of the latest manual handling advisories prior to use.
- Mechanical loading should be used.
- Site / environment relevant personal protective equipment [PPE] should be worn and used while installing and maintaining the product.
- Access to the supplied equipment should be restricted to trained persons as much as reasonably practical to the site conditions and risks.

Any and all manual handling must follow the 'Manual Handling Operations Regulations 1992' and be carried out by trained, competent persons.

Transportation & Storage

The Mercury Pro Package Pumping Station will be delivered fully assembled, and ready to install. It should only be loaded/unloaded via suitable mechanical means.

Please check inside the tank for loose items, such as any ancillary items ordered.

Check that the delivery is complete and undamaged. Any damage detected should be confirmed on the original consignment note and reported to us immediately.

The chamber is moulded from polyethylene which gives the tank high strength and excellent durability. However it is of vital importance that great care is taken to prevent accidental damage to the chamber walls, arising from accidental blows from tools or concentrated pressure on the chamber walls.

CAUTION

Similarly, sharp corners or edges of bricks and stones should be avoided all times. Impact from a sharp object during the handling and/or installation of the product could fracture the tank wall. The chamber must only be lifted using certified lifting slings, and under no circumstances should the internal pipe connections or fittings be used as lifting points. If the optional extension neck is included, it is important that this is not used as a lifting point.

Structural damage to the tank resulting from the above will render the warranty void. When unloading, pay attention to weight and centre of gravity of the pump station.

If the optional turret is ordered, lifting must be done by the tank neck, and not by the extension turret.

Store the product in a dry place, sheltered from the weather.
All connections should be checked for tightness before and after transportation.

The submersible pump[s] must be handled with care. The free ends of the cables must never be immersed or wetted in any way.

All lifting equipment is to be correctly calibrated prior to use, this equipment is to be operated by trained individuals only, all lifting and manual handling should be done in accordance with the 'Manual Handling Operations Regulations 1992'.

Failure to do so may invalidate any claim.

Site Design

Initial planning can save a lot of time and effort in the later stages, and we suggest that you carefully consider the following points:-

1. Location of pumping station, usually at the lowest ground level on site. Will it be accessible for future service work?
2. Will the incoming pipework have sufficient gradient?
3. At what level will the lowest inlet invert level be in relation to the base level of the chamber and will this allow a sufficient storage volume?

For standard installations we recommend a minimum of 800mm below the lowest incoming inlet invert level to the base of the pump chamber to allow the pumping station to operate efficiently. For non standard installations this may have to be reduced owing to site restrictions. If in doubt please contact our Internal Sales Department.

4. Will the inlet and rising main pipe work be sufficiently buried underground, in-line with the pipe work manufacturer's recommendations?
5. Will the power supply be adequate and will the size of supply cable be sufficiently sized to allow for any voltage drop?
6. All necessary health and safety measures must be observed during the installation process of the pumping station chamber and cover slab.

Product Receipt Check

Prior to your receipt of the pumping station, all of the equipment has been subject to a full in-house, pre delivery inspection. This is to ensure that all of the components and parts are packed correctly and reach site safely. On receipt of delivery, please ensure that the Polythene chamber is intact and has not been damaged in anyway. Please also check that the items you have received are in accordance with your order, as any claims for missing or lost items must be made within 24 hours of receipt.

A major items check-list makes up part of the delivery note for the goods; this lists the key items so that they may be thoroughly checked on delivery. Please note that any items included within the delivery notes that are not signed for will be deemed delivered and correct.

Prior to Installation

Please follow these simple checks prior to lifting and installing the chamber:

- Complete a visual check of the unit for any visible signs of damage.
- Check that all fittings and attachments are secured and fastened.
- Ensure all excavations for the tank are safe for working around.
- Ensure base slab has been cast at the correct depth, is level and dry

We recommend that you engage the services of:-

- A competent civil engineer/ building contractor for the installation of your chamber in the ground and pipework connections.
- A competent electrical contractor is required for all electrical items and services including the provision of the power supply and the installation and connection of the pump and control cabling.

Driveways & Roads

If the pumping station is located in a driveway, it is essential that the concrete cover slab and the access cover are sufficiently rated to accept the required loading. A pedestrian-loading cover is supplied as standard with this pumping station. This may be upgraded to suit the relevant loading requirements and a selection of covers to suit the drive way finish, i.e. block paving are available on request.

It is important that a structural engineer is employed at an early stage prior to excavation, to ensure that sufficient strength is obtained from the cover slab and access cover. A ground condition survey is also strongly recommended to ensure the correct selection of backfill concrete.

The chamber itself will not be taking any load as it acts purely as a former; the concrete around the chamber takes the loading which is directed from the access cover and cover slab so correct structural preparation is essential.

Concrete Specification

Please refer to BS EN 206, BS 8500-1 & BS 8500-2, the two documents must be read in conjunction.

As mentioned previously within this manual, we strongly suggest that you employ the services of a ground condition surveyor to establish the quality of the ground that the system is to be installed into, and also to provide you with a recommendation as to the type of concrete pre-mix you should use. Below is a list of information that you may find beneficial:

RC25 pre-mixed concrete is the minimum specification of concrete with a slump class of S2 for type DC1 ground conditions. For ground conditions other than DC1, it is the responsibility of the site designer or appointed ground surveyor to recommend otherwise.

The concrete must be compacted thoroughly throughout the backfilling process to eliminate the chance of voids. **Please avoid prolonged contact between the chamber wall and the concrete pokers used to avoid poker burns and damage to the chamber.**

The site designer must also take into consideration the strength and condition of the ground for this type of installation, i.e. peaty ground etc. The base of the excavation may require strengthening, also bearing in the mind the loading requirement from the cover level.

It is of vital importance that the excavation is kept dry throughout the installation process. For high ground water conditions, the use of drainage pumps will be required to keep the excavation dry. This is imperative, as the strength of the concrete backfill can be affected, resulting in irreparable damage to the chamber.

T-T PUMPS Ltd will not accept any liability for a damaged chamber which is the direct result of a poor concrete selection or installation. No claims will be considered unless a concrete certificate is provided by a certified pre-mix supplier.

Mercury Plus Tank Civil Installation Guide - Pedestrian area

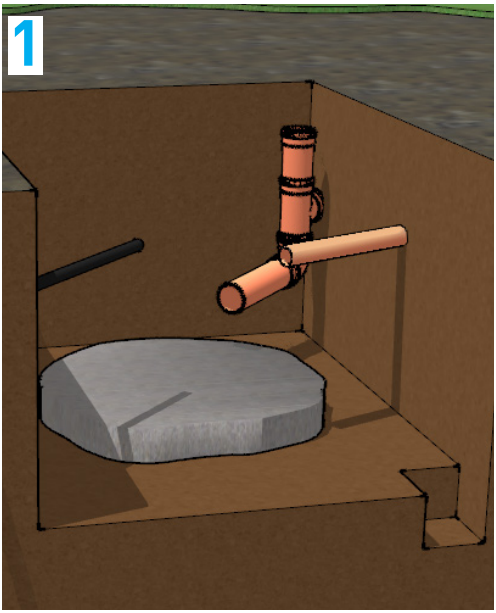

Prepare the excavation for installation of the package pump station. Level the base of the sump as much as possible.

We recommend the inclusion of a small sump in the base of the excavation. A pump may be required should excessive ground water be an issue.

Before lowering in the chamber, plan the installation of the station by selecting from 3(no.) inlet positions in relation to the direction of the discharge rising main.

Create a concrete cradle in the base of the chamber minimum 250mm high in the centre of the excavation in readiness to puddle the pumping station chamber into position.

Take note of pipe and duct positions as holes will need to be cut in the shuttering to accommodate the connections.

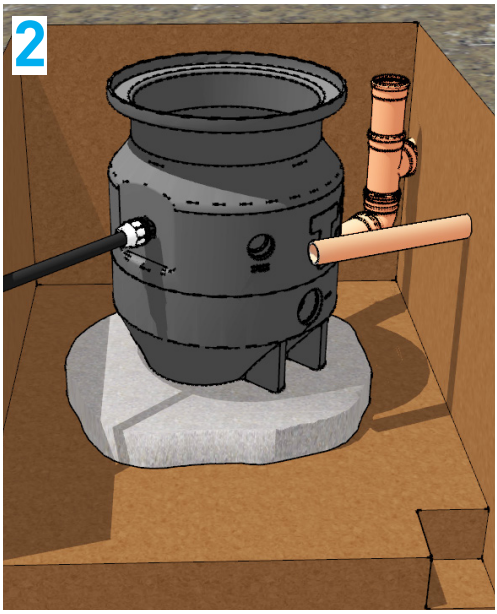

Puddle the tank into position on the concrete cradle, ensuring that no air pockets remain (important).

Connect the rising main to the tank discharge adaptor, connect the cable duct to the Ø110mm sockets where required, if including an air vent, use the opposite Ø110mm duct socket.

Connect the inlet pipe to the Ø160mm sockets at the lower end of the tank, using a (min of) 300mm length of pipe, so the remaining pipework can be connected outside the concrete surround.

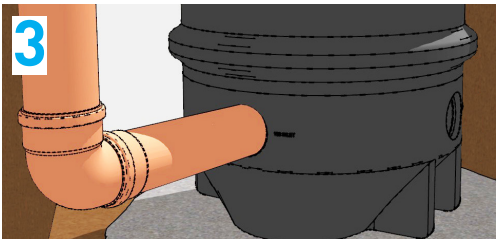

Civil Installation Guide [cont.]

With all connections to the tank made, prepare shuttering around the tank for concrete pours.

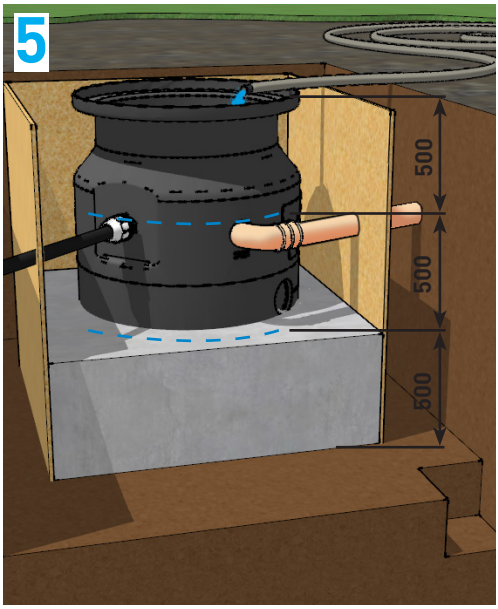

(Front view of shuttering omitted for clarity, dims shown as guidance, not to scale) The concrete pour needs to be done in 500mm stages (max.) ensuring adjacent surfaces are prepared to avoid cold joints occurring, & in accordance with best practice.

The MDPE adaptor must be connected to the discharge pipe. During each concrete pour, maintain the water level above the back fill level of the concrete pour, by a minimum of 500mm.

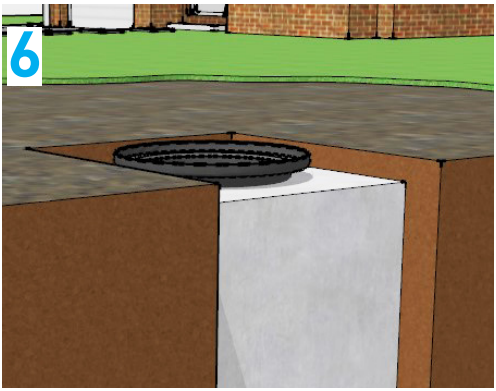

Once concrete surround has dried, back fill and make ground good.

See page 12 & 13 for installation drawing.
Optional turret install detail page 14-16

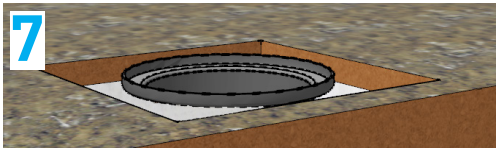

Back fill remaining area with concrete. As the cover frame is pre bolted to the tank, use suitable grouting material to make good the recess. Then secure cover to frame with supplied locking screws.

For Drive & Road installation see on page 9

Civil Installation Drawing

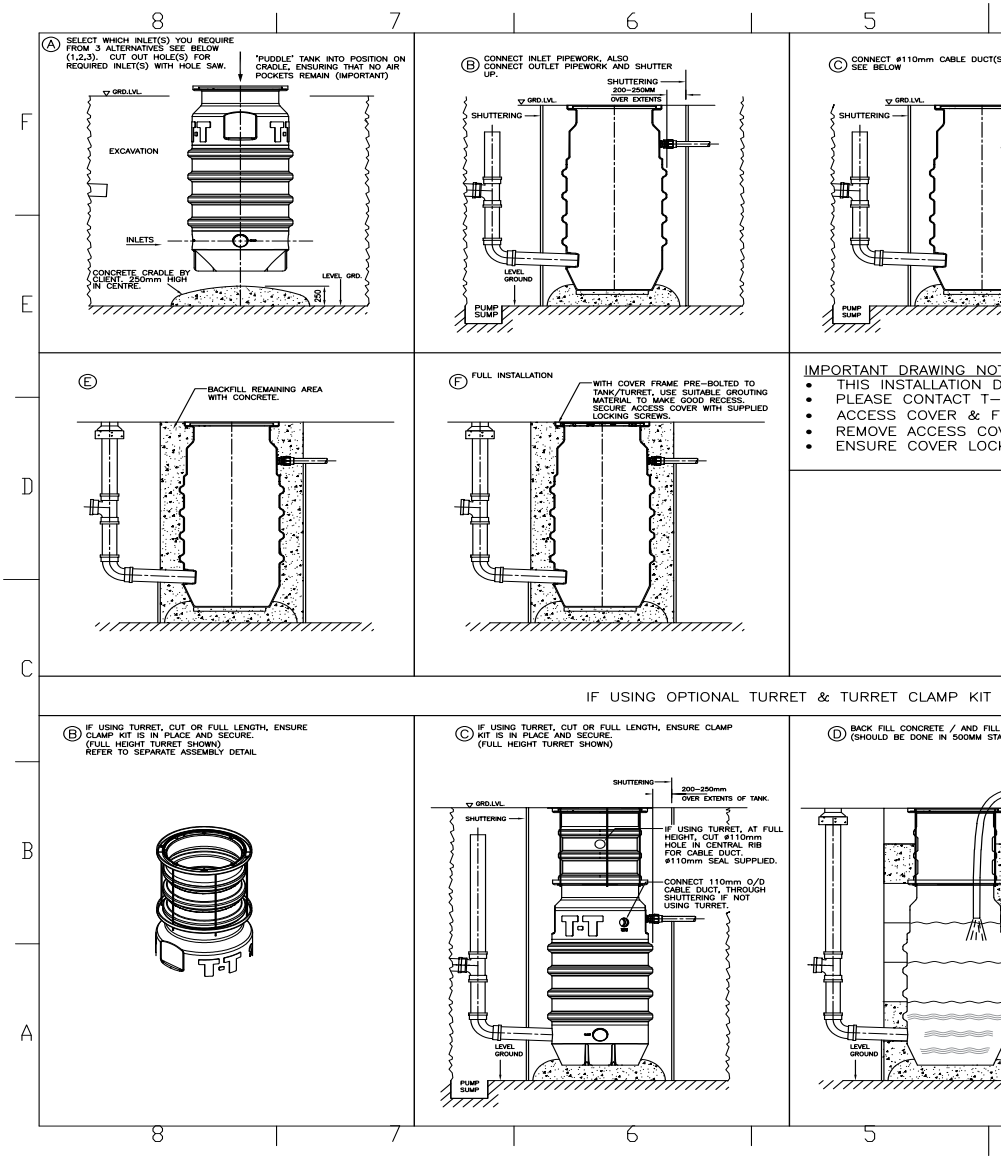

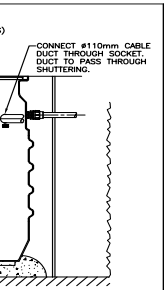

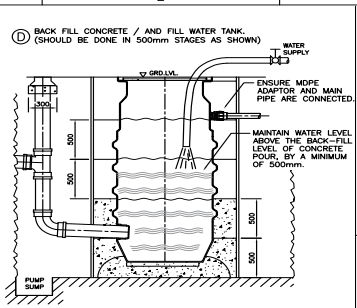

TES:
RAWING IS SUITABLE FOR PEDESTRIAN LOADING AREAS ONLY.
T SHOULD THE INSTALLATION FALL OUTSIDE THIS AREA.
RAME ARE SUPPLIED PRE-FIXED TO THE TANK/TURRET.
VER FROM FRAME FOR TANK/TURRET INSTALLATION.
KING SCREWS ARE KEPT SAFE WITH COVER AT ALL TIMES.

PLEASE NOTE: THE TANK SHOWN ON THIS DRAWING IS THE VENUS VERSION, HOWEVER THE INSTALLATION PROCESS IS IDENTICAL FOR THE MERCURY TANK.

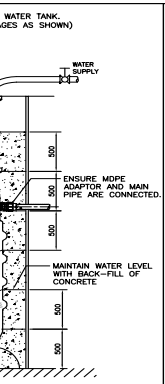

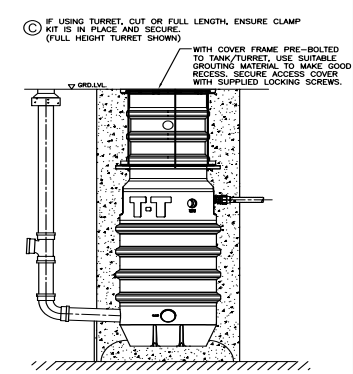

General Notes:
All dimensions are to be checked on site with allowances for variations due to normal construction tolerance.

All dimensions in mm unless otherwise stated.

Drawing errors or omissions are to be reported and checked with the Design Office.

This drawing is the property of T–T PUMPS LIMITED. No portion should be copied, loaned or information herein be transferred to a third party or reproduced without the consent of T–T PUMPS LIMITED.

© Copyright T–T PUMPS Ltd. 2019

Rev.	Created	App	Date	Details

Drawing Status:
APPROVED

Design & Head Office, Onneley Works,
Newcastle Road, Woore, Cheshire, CW3 9RU
Tel: +44 (0) 1630 647200 Fax: +44 (0) 1630 642100

Client :

Scheme:
T–T STANDARD INSTALL DETAILS

Drawing Title :
MERCURY / VENUS PLUS TANK CIVIL INSTALLATION DIAGRAM

Drawn: SJH
Approved By: JPW

Date : 19.06.2019
Scale : 1:50 @ A3

Drawing No : PP/0029
Revision:
Sheet: 1/1

Project No : NP5040
TT339–4

Extension Turret Methodology

1. Ensure all parts have been checked against the parts list and are all present.
2. Follow assembly as laid out below...

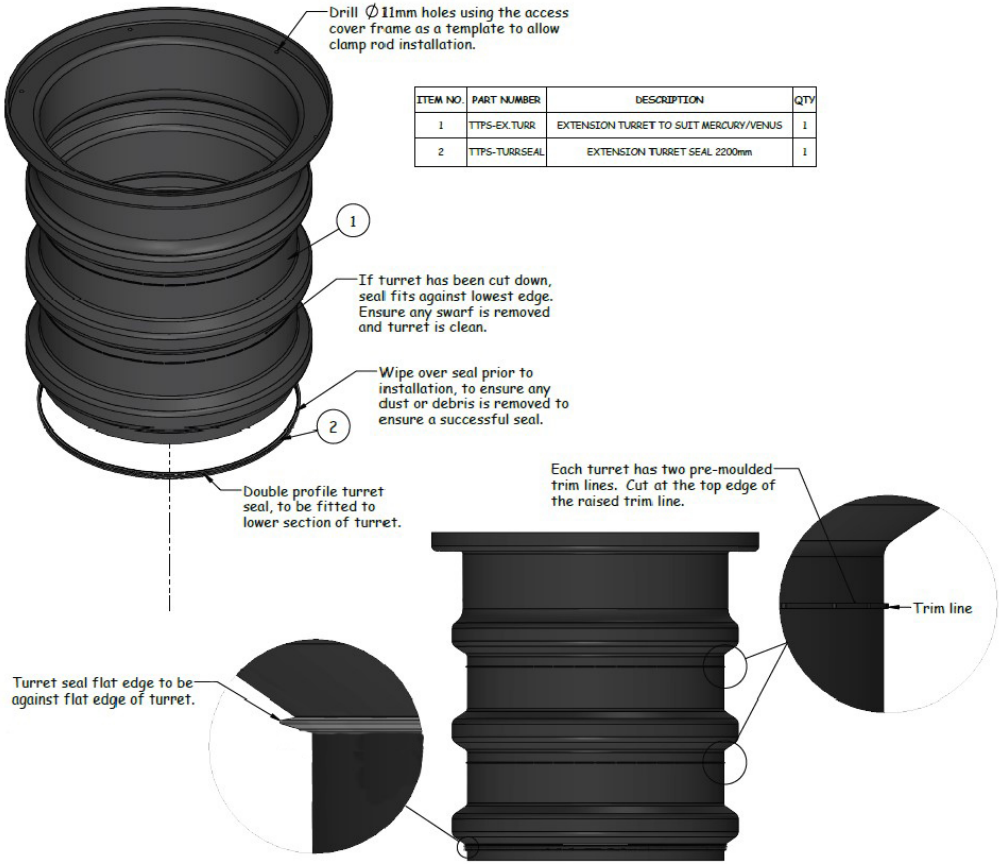

ITEM NO.	PART NUMBER	DESCRIPTION	QTY
1	TTPS-EX.TURR	EXTENSION TURRET TO SUIT MERCURY/VENUS	1
2	TTPS-TURRSEAL	EXTENSION TURRET SEAL 2200mm	1

Extension Turret Methodology cont...

IMPORTANT:
Ensure turret seal is installed prior to clamping.
Ensure turret is installed vertically to level seal in tank opening.

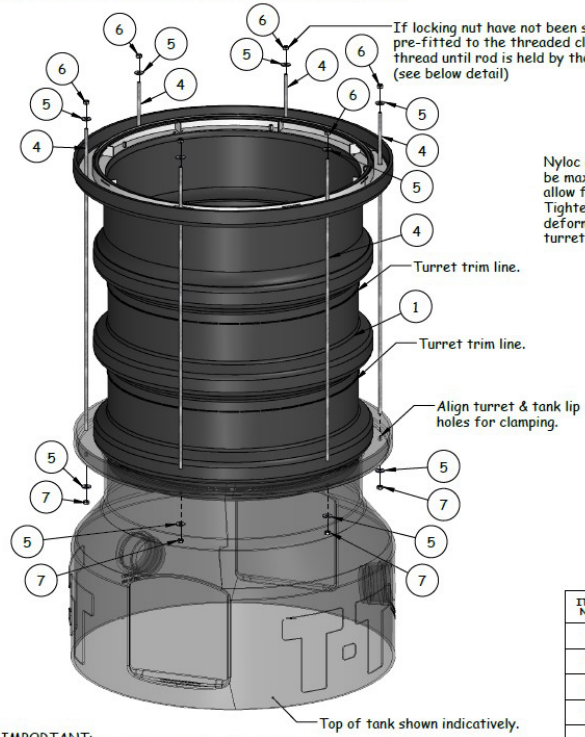

Clamp Kit: Rod Lengths	
Turret Cut height	Rod Length
Full Height	1000mm
2/3 turret	700mm
1/3 turret	400mm

Nyloc nuts to top of threaded rod, to be max. 15mm from lip of turret to allow final cover of grout/screed. Tighten no more than 2Nm to avoid deformation of the GRP tank and turret lips.

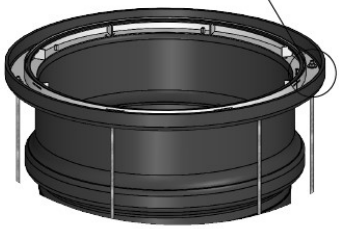

ITEM NO.	PART NUMBER	DESCRIPTION	QTY.
1	TTPS-EX.TURR	EXTENSION TURRET TO SUIT MERCURY/VENUS	1
2	TTPS-TURRSEAL	EXTENSION TURRET SEAL 2200mm	1
3	SOT0004414 REV 5	800mm DIA CLEAR OPENING ACCESS FRAME & COVER	1
4	TTPS-M10CLAMPROD	MERCURY/VENUS EX.TURRET M10 CLAMP ROD	6
5	CONSUMABLE	M10 PEE WASHER	12
6	CONSUMABLE	M10 A2-70 STAINLESS STEEL NYLOC NUT	6
7	CONSUMABLE	M10 HEX NUT ST/ST	6

IMPORTANT:
Once the above has been completed, the turret show stand rigid within the tank.

If at this point the tank is to be located in its final position DO NOT use the turret as a lifting point, fit lifting straps securly around the tank.

Rod tightening sequence

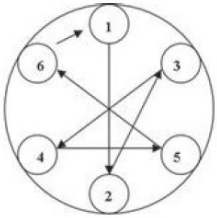

Extension Turret Methodology cont...

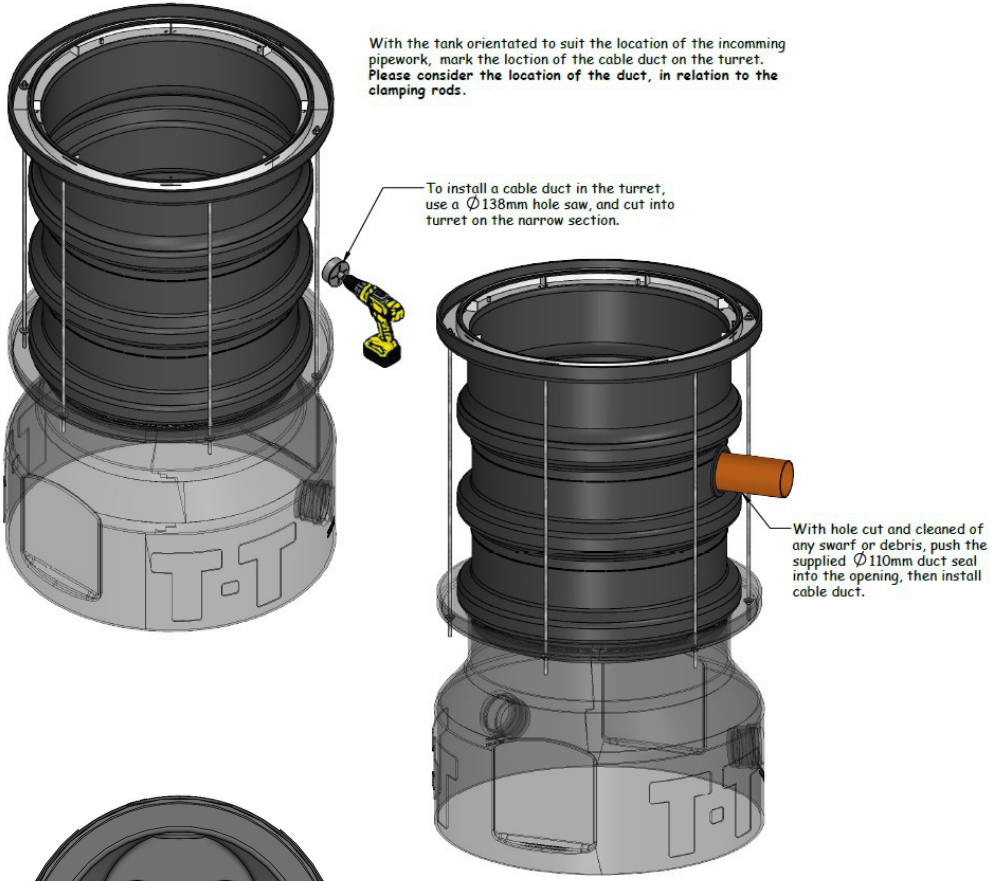

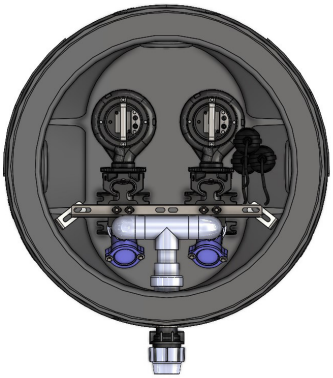

IMPORTANT
Guide rails are supplied loose when a turret is ordered. Ensure the orientation of the turret with the pre-fitted support beam is in line with the guide rail lugs on the auto coupling in the tank, unless turret is supplied pre-fitted.

Fabricated steel covers - Fitting Instructions

1. Covers and frames are manufactured as a unit – ensure that corresponding covers and frames match and fit correctly before commencing installation.
2. The frame of an access cover must be fully supported. Any load placed onto the access cover is transferred to the structural opening via the frame. If the frame is only partially supported, the unit will not carry the load it is designed for and will ultimately fail. Please see diagrams below.
3. Recessed covers (excluding paving infill) must be fully filled with grade C25 concrete, by volume, 1 cement, 2 sand, 3 coarse aggregate (9.5 to 3mm), to achieve their stated loading capacity.

Covers and frames are not designed to take traffic when not fully fitted.

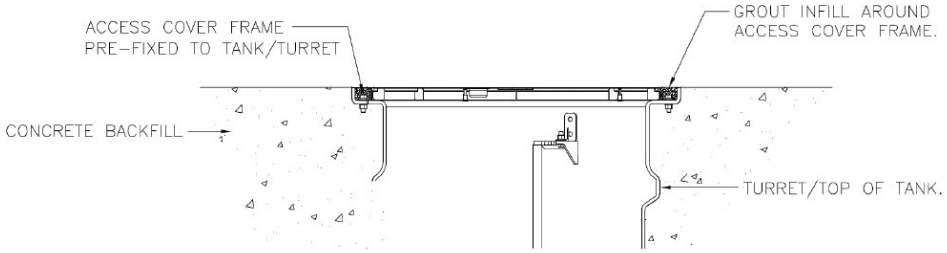

INSTALLATION IN PEDESTRIAN AREA

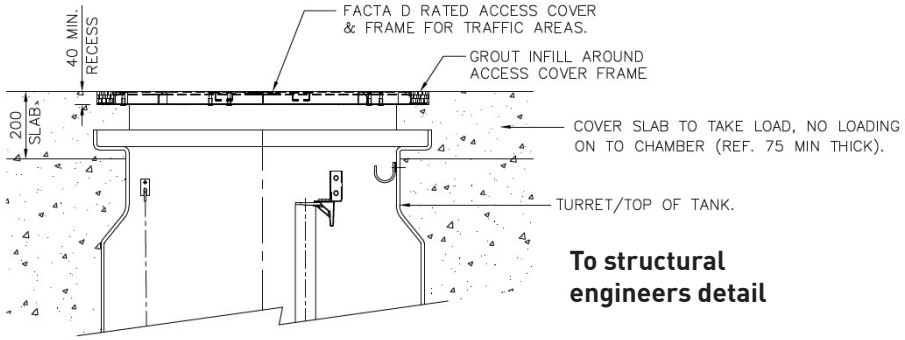

To structural engineers detail

INSTALLATION IN TRAFFIC AREAS

Single Unit Covers

For other cover designs, refer to cover specific instructions

Control System

The pumping station is controlled via a control panel that will be supplied as standard with the system. The basic features of this system are to control the pumps and to alert the user(s) of the system in the event of a failure which will give an audible and visual alarm locally, or remotely via a telemetry system, dependent upon the system specification.

Float switches are the standard method of level control used in conjunction with the control panel (ultrasonic level control can also be used, again dependent upon the site specifications).

Float Switch Adjustment

For single pump stations two float switches are supplied. The duty float switch will be marked with one band of white tape and the high level will be marked with two bands. For dual systems a similar labelling method is used but in this case with the addition of a standby float which is marked with two white bands; the high level float is then marked with three bands.

The float switch assembly inclusive of lifting chain and counter weight will be pre-set at our works to provide an estimated start, stop and high level setting to suit the site and the depth of the chamber involved. If required, the settings may be changed by altering the float cable securing positions on the lifting chain. If you are not sure, please contact our Internal Sales Department for further instruction.

It is our recommendation that the high level float switch is positioned just below the lowest inlet invert position of the incoming pipe on site. This will alert you of any problem with the system prior to any surcharging of the incoming pipe work.

It is also important that on dual stations, when the standby float switch is in a raised (start) position, it is above the duty float switch raised position. The standby float switch when it is in a lowered (stop) position, must also be lower than the lowered position of the duty float.

On some system designs, the type of float switch used may be different so please always refer to the control panel drawing supplied with the system.

Electrical Connections

Please employ the services of a competent electrical engineer / contractor.

Our T-T Engineers may attend site to complete this task for you if required. Please contact our Sales Department to discuss this if you have not already received our quotation.

Before attempting to make any electrical connections, please ensure that the pump(s) is lowered into the chamber and the cable from the pump(s) is not trapped and is free. The pump and the float switch cables need to be pulled through the cable ducting on site and you must refer to the electrical wiring diagram supplied with the control system for the electrical installation.

Part P Compliance

For domestic installations, we always request that the power to our control panel equipment is provided by others and connected to our control panel so that it is live but isolated. We only make the final connections of the pump and float switch to the control panel ourselves.

It is therefore the responsibility of the person making the alterations to the electrical circuit in order to provide power to our equipment, to certify that the installation complies with Part P (by being a competent person registered with an electrical self-certification scheme authorised by the Department for Communities and Local Government).

Alternatively, notification of proposals to carry out the electrical installation must be given to a Building Control body before work begins.

Commissioning of your Pumping Station

Having satisfied yourself that all the connections are correct, a brief test run of the system is required as follows:

To test the pump on a single pump station, lift the duty float into its start position and you should feel that the pump is operational. Carry out this procedure for a few seconds only and then return the float switch back to its stop position to turn the pump off.

For dual pumping stations this procedure should be carried out twice. The first time you should see one pump running, and the second time, the other pump should operate, proving that the stepping relay within the panel is operating correctly.

To test the high level alarm float switch, simply lift this float to its start position and it will operate the alarm features of the control panel.

Operation, Maintenance & Safety Procedures

Package pumping stations can be very hazardous, and appropriate working practices must be always followed. The instructions and information given in this manual are as explicit as reasonably practicable and both competence and expertise are necessary in the maintenance of the system.

To ensure reliable and trouble-free operation of the system, we strongly recommend that the servicing of the system is only undertaken by experienced and authorized personnel. The operation and maintenance of this system must be carried out in compliance with all current health, safety and welfare legislation.

Sewage pumping stations, where applicable, are safe in operation, however because of the media being pumped, gases such as methane and hydrogen sulphide can build up. It is therefore important that sensible precautions are taken.

Package Stations have been designed to be maintained from the outside of the chamber as the pump[s] and float switches are all fully removable from the chamber.

CAUTION

The following check list should help...

- Never work or maintain a sewage pumping station on your own.
- Isolate the electrical supply before working on a pumping station.
- Never enter the pump chamber under any circumstances unless fully qualified to do so, i.e., confined space trained, using appropriate safety equipment.
- Keep naked flames away from pumping stations.
- Never leave the pump chamber open or unattended.
- Always secure the access cover lid when leaving the pumping station.
- Never use a wander light in or around the pump chamber unless the light is intrinsically safe.
- The Plant/Equipment must not be used for work for which it is not design intended.

Impeller Rotation

On a three-phase submersible pump, it is important to test the rotation of the impellers to ensure that the pump is wired correctly to the control panel. Carry out the duty float switch test as above and then look at the pump through the pump base so that you can see the impeller. If wired correctly, the impeller should be spinning anti-clockwise. If the impeller runs clockwise, this means that two of the phases have been wired incorrectly and need to be corrected.

Please note that care and attention must be taken at all times when carrying out the about as electrical circuits will be live and the pumps contain rotational and sometimes very sharp parts to their design.

Never use the pump cables to lift the pump, as the cable gland may be damaged allowing water into the pumps motor, damaging the motor beyond repair. Always use the lifting chains and lifting equipment provided.

Removal / Installation of pumping equipment

For safe removal of pumping equipment we recommend the use of a lifting davit:
Lifting davits and sockets are optional extras and are designed for lifting equipment safely from pump stations. If using a davit the following procedure should be adhered to.

- Isolate electrically and hydraulically before commencing the removal of any pump.
- Install the lifting davit in the davit socket, then locate the lifting chain in one of the holes at the top of the davit using 'D' shackle provided.
- Remove the access cover over the pump that is to be removed (do not remove more covers than necessary).
- Lower the chain block hook and secure in the lowest accessible large ring of the pump lifting chain.
- Begin to lift the pump and this will break the seal between the pump delivery port and the auto coupling pedestal, and enable the pump to slide up the guide rails.
- The pump is lifted until the staging chain safety hook can be secured into the large ring on the pump lifting chain. When this has been achieved, the chain block hook can then be removed and lowered to the lowest accessible ring on the pump lifting chain and the above process repeated until the pump reaches a point above ground level. The access cover should then be closed, to aid safe working around the pump.
- The pump can then be swung round to a desired position away from the access opening.

To re-install the pump in the wet well, reverse the above procedures.

Any defects in, or damage to, plant or equipment must be reported immediately.

Hygiene

WARNING

When working on a live pumping station take sensible precautions about hygiene. Always wear protective overalls, gloves and footwear. When work is completed remove soiled clothing for laundering or disposal and always wash thoroughly.

Much of the equipment installed on this plant is designed to operate automatically and may start without warning. Before working on any item of the plant or equipment, ensure it is correctly, electrically and mechanically isolated.

Regular Maintenance - Sewage Applications

It is important that the pumping station is checked frequently, to ensure that it is in full working order and that there is not an excessive build-up of fats and materials.

If there is a build-up of fatty materials, pour a reasonable quantity of household detergent onto the affected area, leave for a little while and then hose down, repeat if necessary. This will ensure that the float switches and pumps operate freely without a build-up of fatty matter. In areas where large amounts of grease are expected, the fitting of a grease trap prior to the pumping station is recommended.

Mercury Plus Tank Dimensions

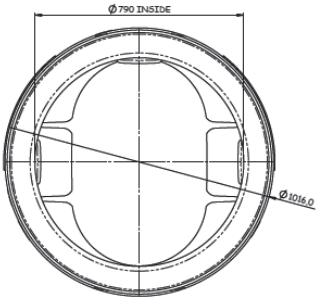

PLAN VIEW

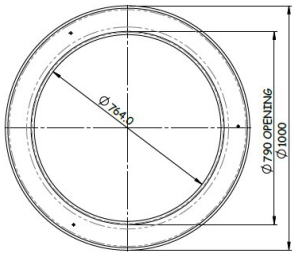

PLAN VIEW

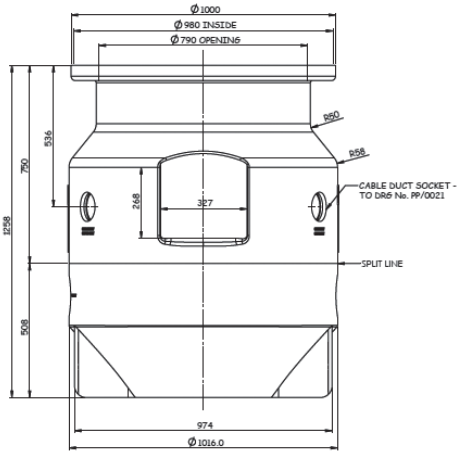

FRONT ELEVATION

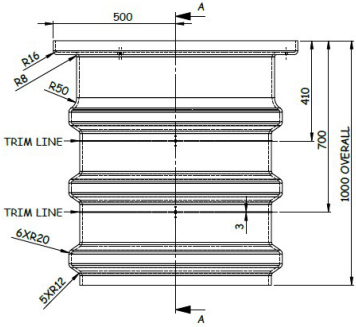

ELEVATION

Fault Finding

SYMPTOM	POSSIBLE CAUSE	CORRECTIVE ACTION
Pump does not start	Check and rectify power supply, including check for excessive cable length or incorrect cable size causing voltage drop	Check and rectify power supply, including check for excessive cable length or incorrect cable size causing voltage drop
	Power not switched on at all points, or connections not secure	Check all switches and cable connections
	Fuse failed or circuit breaker operated	Check fuses / circuit breaker
	Control panel overload tripped	Check setting / condition of overload unit - reset/ replace. If satisfactory, investigate cause; do not reset continuously.
	Control panel fault	Investigate and rectify
	Motor fault	Investigate and rectify
	Cable damaged	Replace
	Pump impeller obstructed	Clear
	Level switches obstructed or at incorrect level	Check manual switching satisfactory [except on pumps with integral level switches]. Ensure level switches are correctly set to operate.
Pump does not stop	Level switches obstructed	Ensure switches are free to operate
	Control panel fault	Investigate and rectify
Pump starts and stops repeatedly	Level switches obstructed or at incorrect level	Clear or reset
	Power supply fault	Investigate and rectify, including check for voltage drop on starting
	Pump impeller obstructed	Clear or reset
	Non-return valve[s] obstructed or faulty, allowing back flow when pump stops.	Clear or repair/replace
Pump starts but overload protection trips	Overload setting incorrect	Check setting / condition - reset / replace. If satisfactory, investigate cause - do not reset continually
	Power supply fault	Investigate and rectify, including check for availability of 3 phases [for 3-phase motor]
	Connections faulty	Investigate and rectify
Pump runs but gives no output or reduced output	Discharge obstructed	Clear pipework
	Valve(s) partly or fully closed or obstructed	Open or clear valves
	Discharge leak in pumping chamber	Secure discharge connections
	Pump impeller obstructed	Clear
	Pump impeller worn	Replace
	Pump air locked	Release air
	Pump wrong rotation	Rectify electrical connections (3 phase motor only)
	Incorrect pump selection	Re-assess system
	Pump impeller obstructed	Clear

Fault Finding [cont.]

SYMPTOM	POSSIBLE CAUSE	CORRECTIVE ACTION
Pump runs, but noisy or vibrates	Pump / impeller air locked	Release air
	Pump impeller worn or damaged, or pump shaft damaged	Investigate and replace as necessary

Disposal

The chamber is manufactured from virgin High-density Polyethylene, and the symbol displayed above and on the tank indicates it can be recycled. HDPE is accepted at most recycling centres in the world, as it is one of the easiest plastic polymers to recycle. Most recycling companies will collect HDPE products and take these to large facilities to be processed.

Please check with your local authority for recycling capabilities.

Please refer to the specific pump manual for disposal instructions.

After Sales Support

Your product should have a long and reliable life if it is cared for and maintained correctly. We would strongly recommend that the pumping system is serviced thoroughly at least every six months. This should be undertaken by component electrical/mechanical engineers.

T-T Pumps offers a full after sales service, including our Service Agreement scheme. This can give you peace of mind, allowing you to achieve maximum reliability and efficiency from your product.

For full details of our Service Agreement scheme, please contact our Service Department who will be pleased to provide you with a quotation **+44 (0)1630 647200.**

Notes

Notes

response@ttpumps.com +44 (0) 1630 647200 ttpumps.com