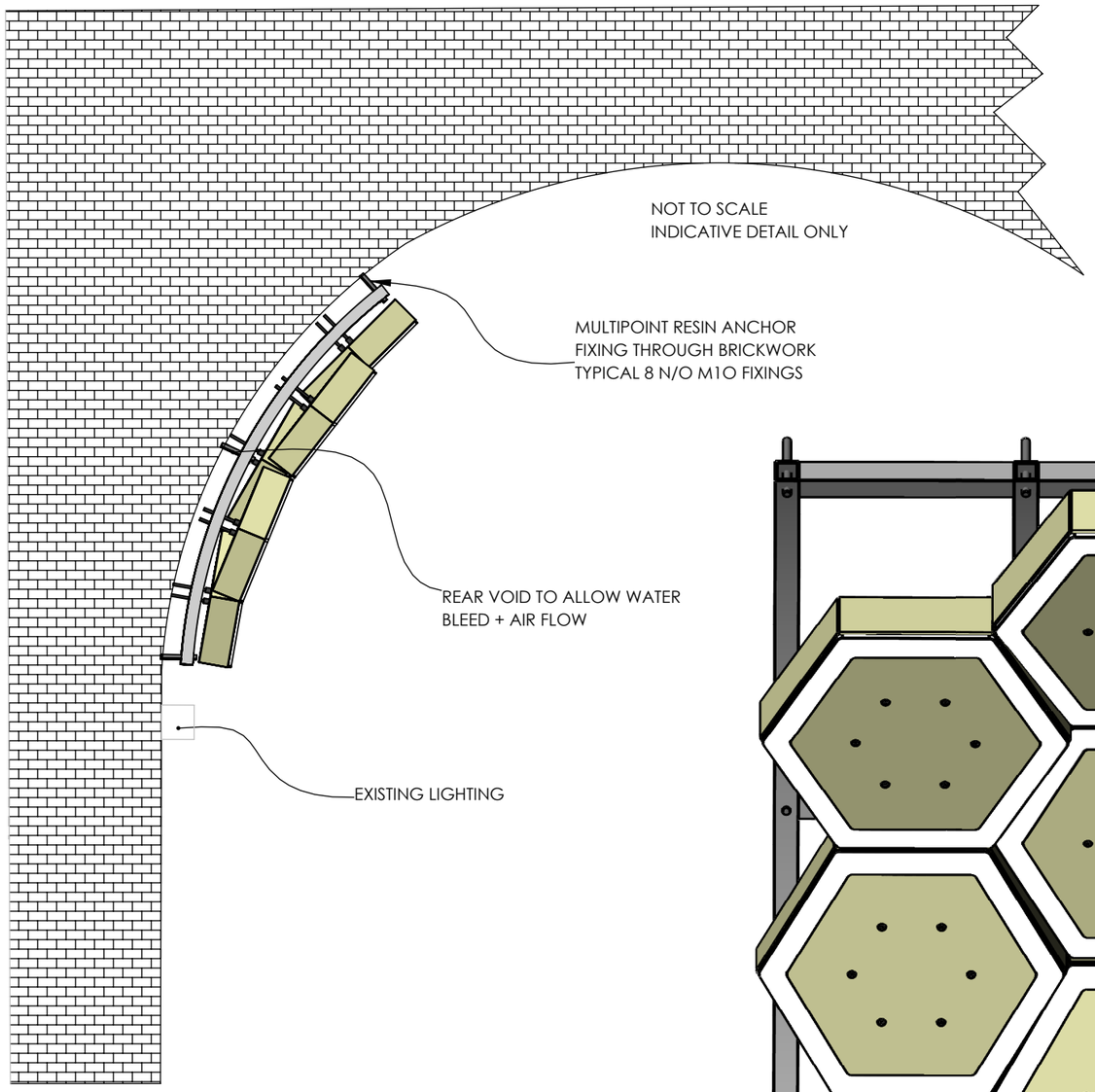

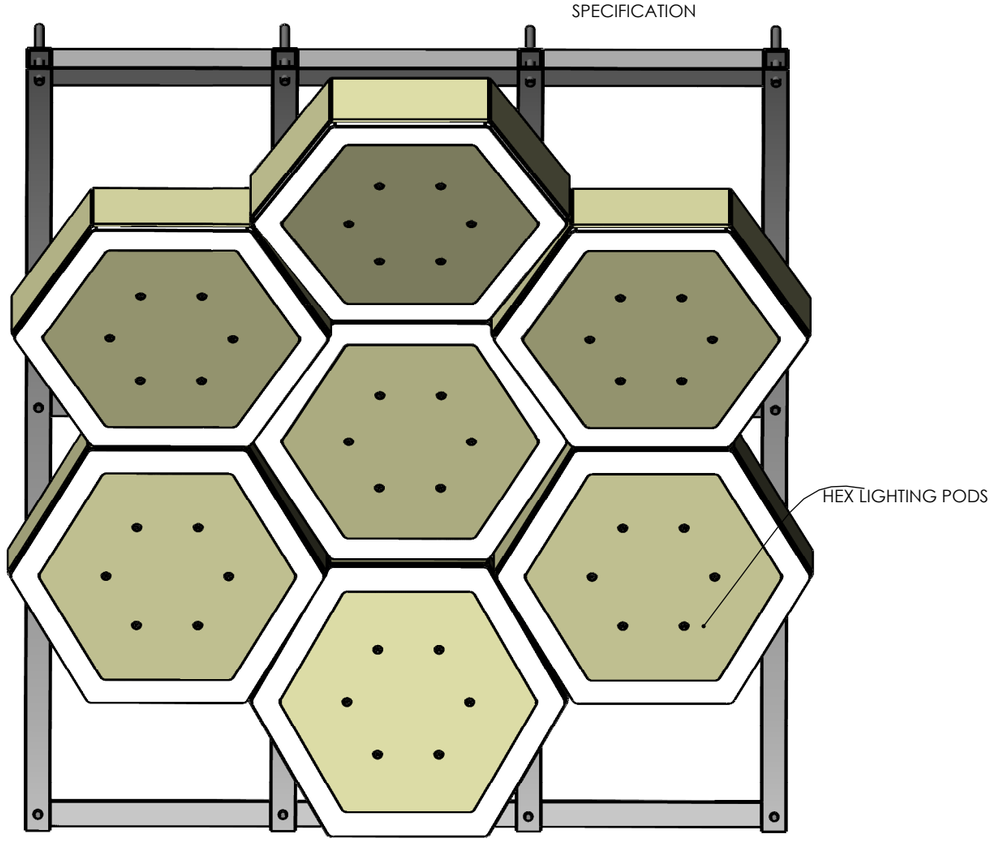

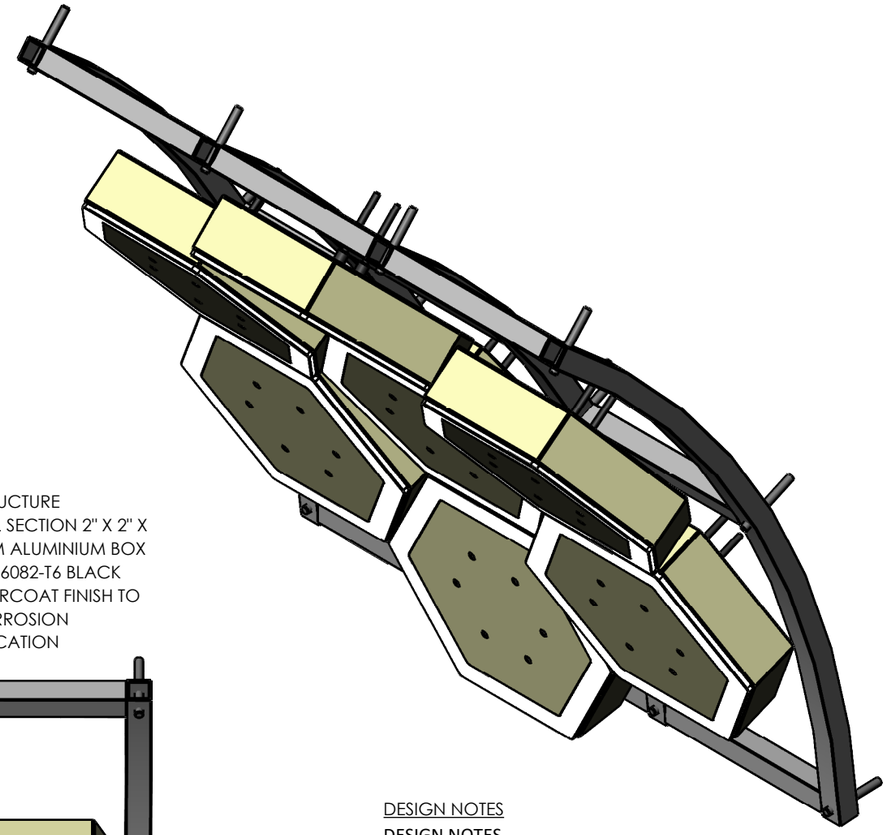

DESIGN NOTES

- INSTALLED IN DISCRETE MODULES
- EACH LIGHT MODULE CAN BE INDIVIDUALLY FITTED AND REMOVED
- HOUSING SHOWN CONTAINS IP67 LED FIXTURE
- INDIVIDUALLY CONTROLLABLE + DIMMABLE

DESIGN NOTES

DESIGN NOTES

STRUCTURES SHALL BE DESIGNED AND ASSESSED TO THE FOLLOWING APPLICABLE STANDARDS PRINCIPALLY;

EUROCODE 0: BASIS OF STRUCTURAL DESIGN (EN 1990)
EUROCODE 1: ACTIONS ON STRUCTURES (EN 1991)
EUROCODE 3: DESIGN OF STEEL STRUCTURES (EN 1993)
EUROCODE 7: GEOTECHNICAL DESIGN (EN 1997)
EUROCODE 9 : DESIGN OF ALUMINIUM STRUCTURES (EN 1999)

AS DETAILED IN EN1990
CORE STRUCTURAL ELEMENTS WILL BE DESIGNED WITH AN INDICATIVE DESIGN WORKING LIFE AS SHOWN BELOW

Table 2.1 - Indicative design working life

Design working life category	Indicative design working life (years)	Examples
1	10	Temporary structures (1)
2	10 to 25	Replaceable structural parts, e.g. gantry girders, bearings
3	15 to 30	Agricultural and similar structures
4	50	Building structures and other common structures
5	100	Monumental building structures, bridges, and other civil engineering structures

(1) Structures or parts of structures that can be dismantled with a view to being re-used should not be considered as temporary.

DRAWN	MIKEB	UNLESS OTHERWISE SPECIFIED: DIMENSIONS ARE IN MILLIMETERS		PROJECT:	CO-OP LIVE WALKING TRAIL	DRAWING TITLE:	CWT_004 INDICATIVE DESIGN DETAILS	
APPROVED	MIKEB	NOTES NOT FOR CONSTRUCTION	DO NOT SCALE IF IN DOUBT ASK	CLIENT / VENUE:	OVG - HOLT TOWN, MANCHESTER, M40 7FQ	SUB-TITLE:	CONCEPT	SHEET SCALE: 1:20
DATE	01/02/2024			PROJECT NUMBER:	NS2328	DRAWING NUMBER:	NS2328_CWT_004_02_001	REVISION NUMBER: A REVISION DATE:

NEWSUBSTANCE LTD

This drawing is the property of
NEWSUBSTANCE Ltd
It may not be reproduced in whole or part
without the prior written consent of the company.

A3

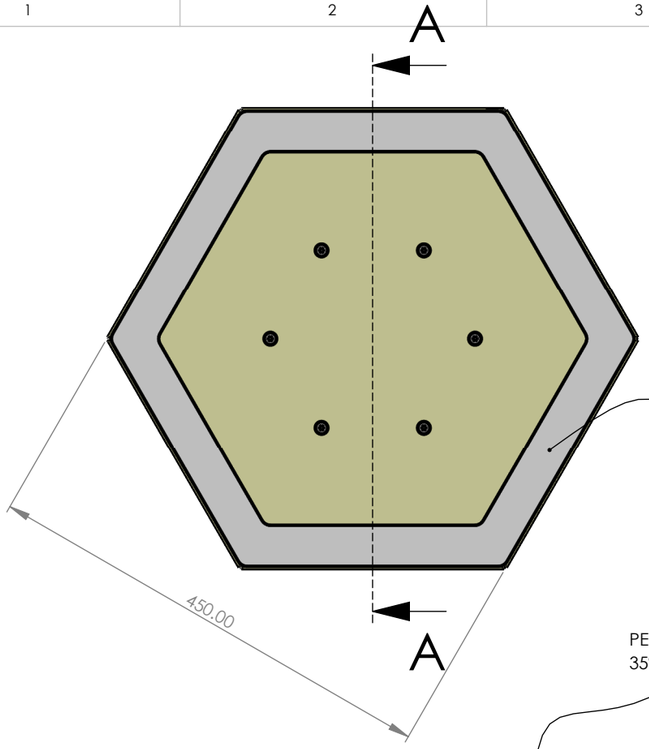

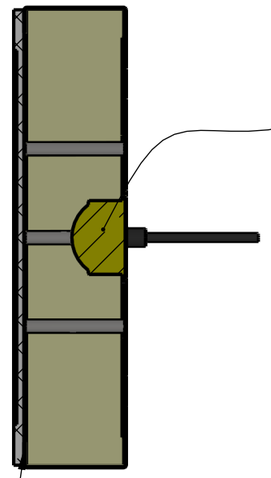

EXTERIOR DOT-HP

FULLY WEATHERIZED DIRECT-VIEW HIGH INTENSITY LED DOT

SPEC SHEET

HIGHLIGHTS

- Creative LED Video element for building and stage integration
- Customizable pixel-pitch
- Bright and fully calibrated for optimal consistency

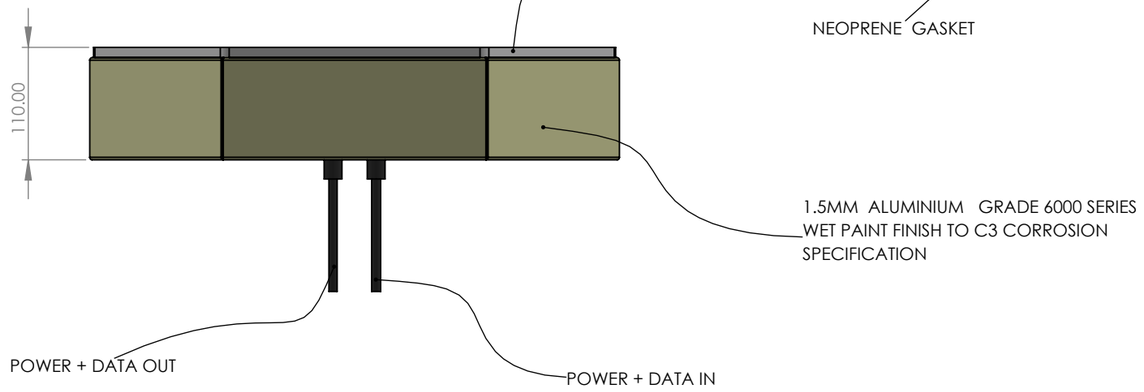

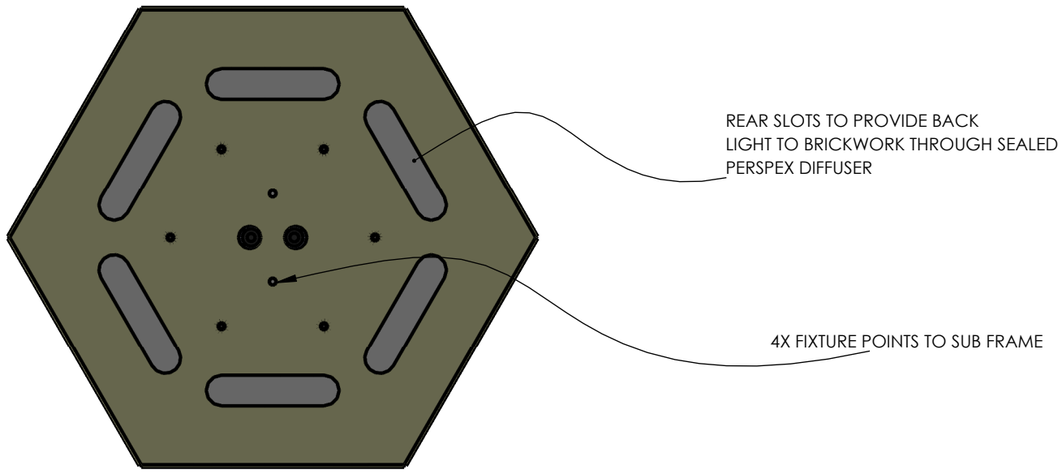

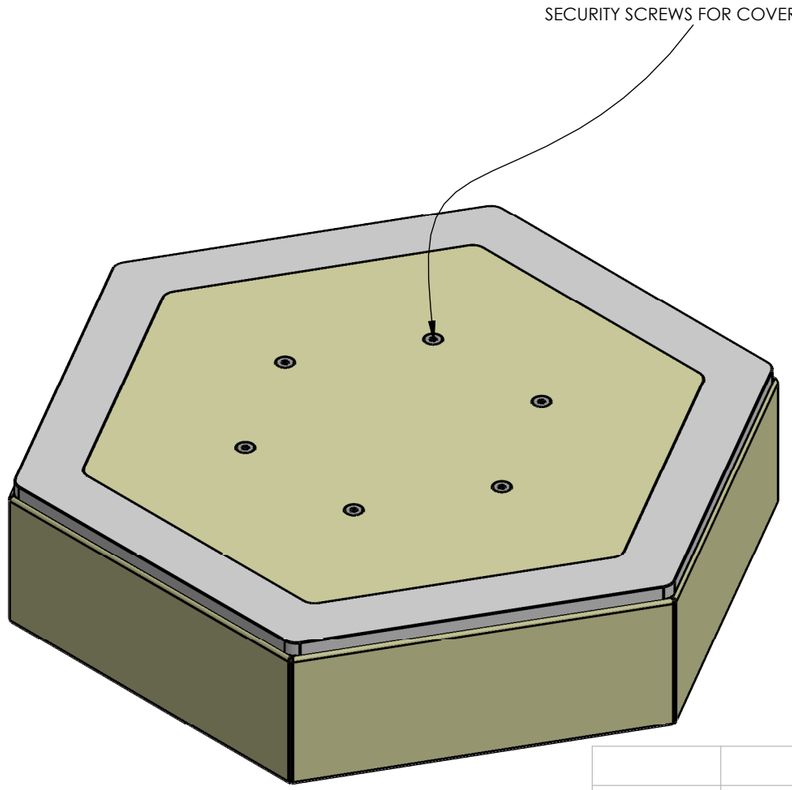

DRAWN	MIKEB	UNLESS OTHERWISE SPECIFIED: DIMENSIONS ARE IN MILLIMETERS	PROJECT:	CO-OP LIVE WALKING TRAIL	DRAWING TITLE:	CWT_004 INDICATIVE DESIGN DETAILS		
APPROVED	MIKEB	NOTES NOT FOR CONSTRUCTION	CLIENT / VENUE:	OVG - HOLT TOWN, MANCHESTER, M40 7FQ	SUB-TITLE:	CONCEPT	SHEET SCALE: 1:20	
DATE	01/02/2024	DO NOT SCALE IF IN DOUBT ASK	PROJECT NUMBER:	NS2328	DRAWING NUMBER:	NS2328_CWT_004_02_001	REVISION NUMBER: A	REVISION DATE:

NEWSUBSTANCE LTD

This drawing is the property of
NEWSUBSTANCE Ltd
It may not be reproduced in whole or part
without the prior written consent of the company.

A3

EXTERIOR DOT-HP

FULLY WEATHERIZED DIRECT-VIEW HIGH INTENSITY LED DOT

SPEC SHEET

HIGHLIGHTS

- Creative LED Video element for building and stage integration
- Customizable pixel-pitch
- Bright and fully calibrated for optimal consistency

OVERVIEW

Exterior Dot-HP is a bright, outdoor-rated dot designed to create media facades or perimeter lighting on large buildings and structures for long-distance viewing. This high-performance exterior LED dot for large venues allows for long fixture runs with variable pixel pitches for flexible designs. A creative tool for lighting designers, the Exterior Dot-HP is available in two versions – RGB color mixing or cool white – with a number of front designs for a variety of unique looks. It is driven by the Martin P3 System Controller family for easy setup and video display. The Exterior Dot-HP is also compatible with RDM/DMX for smaller setups.

KEY MESSAGES

VARIETY OF MODELS FOR DIFFERENT LOOKS AND APPLICATIONS

The Exterior Dot-HP is available with two different LED configurations, full RGB color control or as a cool white version. There are two different fronts available for direct-view applications, the flat clear front or a dome diffuser. Further the Exterior Dot-HP is available with a lens array for directional lighting applications.

FLEXIBLE MOUNTING OPTIONS

The Exterior Dot-HP is an independent dot, which can be connected in high quantities over long distances for large scale projects. The dot can be directly mounted onto a surface and two different mounting brackets are available for further installation options.

EASY INFRASTRUCTURE

The Exterior Dot-HP can be controlled via the Martin P3 protocol for easy mapping and integration with other Martin LED Video products onto the same control system. For small or pure lighting applications, the Exterior Dot-HP also accepts RDM/DMX, enabling even more versatile use.

HARMAN PROFESSIONAL INC. • 8500 BALBOA BOULEVARD • NORTHRIDGE • CA 91329 • USA • +1 818 893 8411

©2019 HARMAN Professional. All rights reserved. Martin® is a registered trademark of HARMAN Professional Inc. registered in the United States and/or other countries.
Features, specifications, and appearance are subject to change without notice. Rev. 201905

EXTERIOR DOT-HP

FULLY WEATHERIZED DIRECT-VIEW HIGH INTENSITY LED DOT

SPEC SHEET

FEATURES

- Up to 120 lm (RGB) and 210 lm (CW)
- Available in clear front, diffuser dome and directional lens variants
- RGB or cool white LED engine
- Flexible mounting system allows for customized solutions
- Local integral in-built diagnostics tool
- High-quality 16-bit per color image processing technology
- Pixel-level brightness and color calibration for optimal image quality
- P3/RDM/DMX controllable (automatic protocol detection)
- Intuitive mapping and addressing via P3 System Controller
- Combined power/data input over single cable
- Supported by integrated power and data processor (P3 PowerPort 1500 or P3 PowerPort 1000 IP) and simple cabling system

ORDERING INFORMATION

- Exterior Dot-HP RGB, Aluminum, Clear Front ..... P/N 90357683
- Exterior Dot-HP RGB, Aluminum, Dome Front ..... P/N 90357685
- Exterior Dot-HP RGB, Aluminum, Directional Front (TIR lens) ..... P/N 90357686
- Exterior Dot-HP CW, Aluminum, Clear Front ..... P/N 90357688
- Exterior Dot-HP CW, Aluminum, Dome Front ..... P/N 90357687
- Exterior Dot-HP CW, Aluminum, Directional Front (TIR lens) ..... P/N 90357689

**Dots in the Exterior Dot-HP range are supplied in cardboard boxes containing multiples of 9 dots. Remaining dots (and orders that consist of less than 9 dots total) are supplied in individual packs.*

RELATED ITEMS

- Martin P3™ PowerPort 1500 ..... P/N 90721040
- Martin P3™ PowerPort 1000 IP Installation..... P/N 90721080
- Martin™ IP66 PSU 240 W PSU..... P/N 90760330
- Martin P3-050™ System Controller ..... P/N 90721090
- Martin P3-150™ System Controller ..... P/N 90721015
- Martin P3-300™ System Controller ..... P/N 90721060
- Martin P3-PC™ System Controller..... P/N 90721030

HARMAN PROFESSIONAL INC. • 8500 BALBOA BOULEVARD • NORTHRIDGE • CA 91329 • USA • +1 818 893 8411

©2019 HARMAN Professional. All rights reserved. Martin® is a registered trademark of HARMAN Professional Inc. registered in the United States and/or other countries.
Features, specifications, and appearance are subject to change without notice. Rev. 201905

EXTERIOR DOT-HP

FULLY WEATHERIZED DIRECT-VIEW HIGH INTENSITY LED DOT

SPEC SHEET

ACCESSORIES

- Magnetic Test Tool, set of 10 ..... P/N 91610139

MOUNTING HARDWARE

- Bracket with flanges (set of 9), Exterior Dot-HP ..... P/N 91606020
- Mounting Profile Kit incl. dot bracket, screws and lock, Exterior Dot-HP, 57 mm (2.25 in.) ..... P/N 91606021
- Mounting Profile, Exterior Dot-HP / Pixline, 320 mm (12.6 in.) ..... P/N 91611620
- Mounting Profile, Exterior Dot-HP / Pixline, 1280 mm (50.4 in.) ..... P/N 91611610
- Mounting Profile Locks, Exterior Dot-HP / Pixline, set of 10 ..... P/N 91611725

INPUT ADAPTER CABLES

- Power + Data Input Adapter, 4-pin male XLR (for P3 PowerPort 1500) to female BBD, 0.25 m (0.9 ft.) ..... P/N 91616046
- Power + Data Input Adapter, 5-pin male XLR + wire tails (for PSU) to female BBD, 0.25 m (0.9 ft.) ..... P/N 91616048
- Power + Data Input Adapter, 5-pin male XLR + male Martin™ IP66 PSU to fem. BBD, 0.25 m (0.9 ft.) ..... P/N 91616050
- Power + Data Input Adapter, 5-pin male XLR + 4-pin male XLR to female BBD, 0.25 m (0.9 ft.) ..... P/N 91616049

OUTPUT ADAPTER CABLES

- Power + Data Output Adapter male BBD to 4-pin female XLR, 0.25 m (0.9 ft.) ..... P/N 91616047
- DMX Output Adapter, male BBD to 5-pin female XLR, 0.25 m (0.9 ft.) ..... P/N 91616051

EXTENSION CABLES, CMX TYPE

- Power + Data Extension Cable, Installation type CMX, BBD-BBD 1 m (3.3 ft.) ..... P/N 91616055
- Power + Data Extension Cable, Installation type CMX, BBD-BBD, 2.5 m (8.2 ft.) ..... P/N 91616056
- Power + Data Extension Cable, Installation type CMX, BBD-BBD, 5 m (16.4 ft.) ..... P/N 91616057
- Power + Data Extension Cable, Installation type CMX, BBD-BBD, 10 m (32.9 ft.) ..... P/N 91616058
- Power + Data Extension Cable, Installation type CMX, BBD-BBD, 25 m (82.1 ft.) ..... P/N 91616059
- Power + Data Extension Cable, Installation type CMX, without connectors, 100 m (328.1 ft.) ..... P/N 91616060

EXTENSION CABLES, LOW SMOKE ZERO HALOGEN TYPE

- Power + Data Extension Cable, Installation type LSZH, BBD-BBD 1 m (3.2 ft.) ..... P/N 91616012
- Power + Data Extension Cable, Installation type LSZH, BBD-BBD 2.5 m (8.2 ft.) ..... P/N 91616013
- Power + Data Extension Cable, Installation type LSZH, BBD-BBD 5 m (16.4 ft.) ..... P/N 91616014
- Power + Data Extension Cable, Installation type LSZH, BBD-BBD 10 m (32.8 ft.) ..... P/N 91616015
- Power + Data Extension Cable, Installation type LSZH, BBD-BBD 25 m (82 ft.) ..... P/N 91616016
- Power + Data Extension Cable, Installation type LSZH, without connectors, 100 m (328.1 ft.) ..... P/N 91616017

LOOSE CONNECTORS

- Power + Data Cable Connector, BBD, male ..... P/N 91611750
- Power + Data Cable Connector, BBD, female ..... P/N 91611751
- Blanking caps for unused female BBD connectors, set of 10 ..... P/N 91616052

HARMAN PROFESSIONAL INC. • 8500 BALBOA BOULEVARD • NORTHRIDGE • CA 91329 • USA • +1 818 893 8411

©2019 HARMAN Professional. All rights reserved. Martin® is a registered trademark of HARMAN Professional Inc. registered in the United States and/or other countries.
Features, specifications, and appearance are subject to change without notice. Rev. 201905

EXTERIOR DOT-HP

FULLY WEATHERIZED DIRECT-VIEW HIGH INTENSITY LED DOT

SPEC SHEET

TECHNICAL SPECIFICATIONS

CONTROL AND PROGRAMMING

Control options ..... Martin P3™ System Controller via Martin P3™ PowerPort 1500, Martin P3™ PowerPort 1000 IP and/or RDM/DMX
Control modes ..... RGB (RGB variants), white intensity (CW variants), basic
Control resolution ..... 16-bit (P3) or 8-bit (DMX) control of each color
Protocol detection ..... Automatic
Setting and addressing ..... Martin P3™ System controller or RDM-compliant DMX controller
DMX channels 3/10
Calibration ..... Color and intensity for each Dot
Firmware update ..... Via Martin P3™ System Controller
DMX compliance ..... USITT DMX512-A
RDM compliance ..... ANSI/ESTA E1.20

CONTROL/USER INTERFACE

Device status ..... Multi-color visual indication
Device test and reset ..... Magnetic button to call up fixture status and test fixture

OPTICS

Options ..... Clear Front, Dome Front, Directional Front (TIR lens)
LED manufacturer, Exterior Dot-HP RGB .... Osram
LED manufacturer, Exterior Dot-HP CW ..... Seoul
Minimum LED lifetime ..... 50,000 hours (to >70% luminous output)*

**Figure obtained under manufacturer's test conditions*

PHOTOMETRICS

Color Temperature:

Cool white (CW) ..... 6700K±300K
RGB ..... 2.000 – 10.000 K (adjustable via P3 or DMX)

Viewing angle:

Clear front ..... 103° x 103° (half-peak)
Dome front ..... 125° x 125° (half-peak)
Directional front ..... 22° x 22° (half-peak)

	Clear front	Dome front	Directional front
RGB, calibrated	90 lumens, 36 cd	62 lumens, 18 cd	72 lumens, 270 cd
RGB, non-calibrated	120 lumens, 48 cd	80 lumens, 24 cd	96 lumens, 360 cd
CW, calibrated	160 lumens, 62 cd	110 lumens, 32 cd	120 lumens, 590 cd
CW, non-calibrated	210 lumens, 82 cd	142 lumens, 41 cd	160 lumens, 775 cd

P3 VIDEO PROCESSING

Color resolution ..... 16 bits per color (48 bit per pixel)
Synchronization ..... System-wide
Frame rate ..... Up to 75 frames/sec
Brightness control ..... 0-100% (at full color resolution)
Gamma Correction and Control ..... Fully controllable
Color Gamut Control ..... Fully controllable
LED ageing correction ..... Built-in

CONSTRUCTION

Color ..... Electrostatic powder-coated (custom colors available by special order) (custom colors available on project basis)
Base ..... Cast aluminum
Protection rating IP66
Impact resistance IK08
Corrosion resistance ..... C5-M (very high corrosivity / marine, ISO 12944)
Vibration resistance ..... 1.0g, Sinusoidal (IEC 60068-2-6) 0,7g RMS Random (IEC 60068-2-64)
RoHS compliant

INSTALLATION

Mounting points ..... Direct surface mount, optional mounting plate or optional mounting profile
Orientation ..... Any

CONNECTIONS

Power and data input ..... 6-pin custom (BBD) IP66-rated
Power and data thru ..... 6-pin custom (BBD) IP66-rated
Hot-pluggable

ELECTRICAL

Nominal input voltage ..... 48 VDC +/- 4%
Power supply options ..... Martin P3™ PowerPort 1500, P3™ PowerPort 1000 IP, Martin™ IP66 PSU or generic 48 VDC PSU
Typical total power consumption, calibrated mode ..... 5 W at full intensity, full white
Typical total power consumption, uncalibrated mode ..... 7 W at full intensity, full white
Surge protection ..... 4 KV
Max. total number of dots ..... 63 pcs (per PowerPort 1500 output)*
Max. total number of dots ..... 45 pcs (per PowerPort 1000IP output)*
Max. total number of dots ..... 42 pcs (Martin IP66 PSU 240W)*
Max. total cable length (dots and cables) ..... 115 m (377 ft)*

**Refer to system diagram for full details*

HARMAN PROFESSIONAL INC. • 8500 BALBOA BOULEVARD • NORTHRIDGE • CA 91329 • USA • +1 818 893 8411

©2019 HARMAN Professional. All rights reserved. Martin® is a registered trademark of HARMAN Professional Inc. registered in the United States and/or other countries.
Features, specifications, and appearance are subject to change without notice. Rev. 201905

Martin® by HARMAN

EXTERIOR DOT-HP

FULLY WEATHERIZED DIRECT-VIEW HIGH INTENSITY LED DOT

SPEC SHEET

TECHNICAL SPECIFICATIONS

THERMAL

Cooling	Convection
Maximum ambient temperature (Ta max.)	55° C (131° F)
Minimum ambient temperature (Ta min.)	-20° C (-4° F)
Total heat dissipation (calculated, +/- 10%)	20 BTU/hr.

APPROVALS

EU safety	EN 60950-1, EN 60950-22
EU EMC	EN 55024, EN 55032 (Class A), EN 61000-3-2, EN 61000-3-3
US safety	UL 60950-1, UL 60950-22
US EMC	FCC Part 15 Class A
Canadian safety	CSA C22.2 No. 60950-1, No. 60950-22
Canadian EMC	ICES-003 Class A
Australia/NZ	RCM

MOUNTING OPTIONS

Flange Bracket

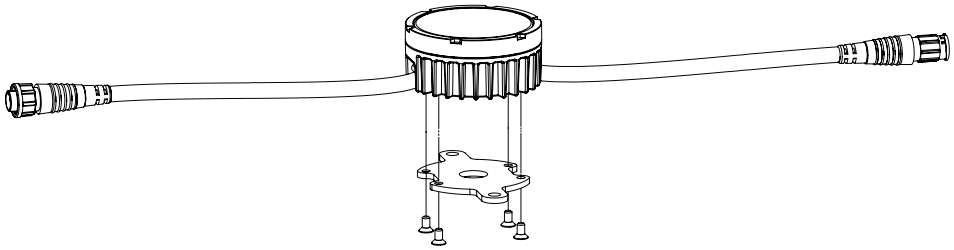

Direct Mounting

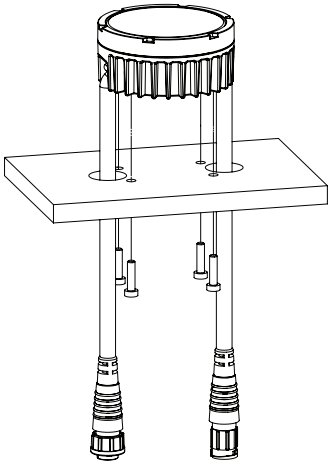

Mounting Profile

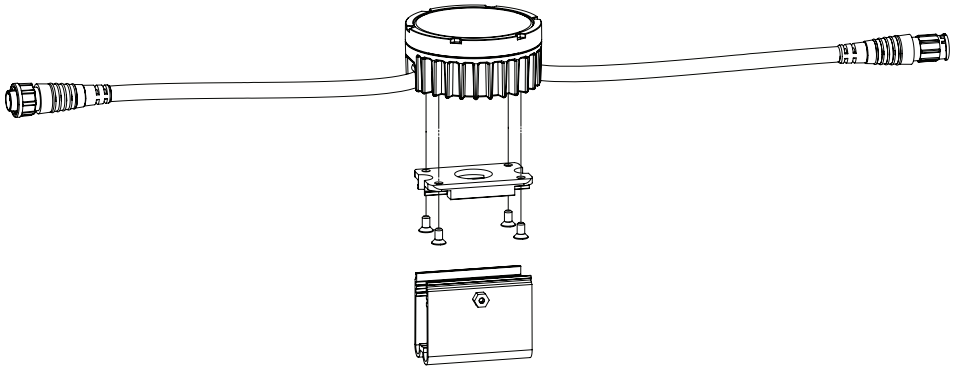

HARMAN PROFESSIONAL INC. • 8500 BALBOA BOULEVARD • NORTHRIDGE • CA 91329 • USA • +1 818 893 8411

©2019 HARMAN Professional. All rights reserved. Martin® is a registered trademark of HARMAN Professional Inc. registered in the United States and/or other countries.
Features, specifications, and appearance are subject to change without notice. Rev. 201905

EXTERIOR DOT-HP

FULLY WEATHERIZED DIRECT-VIEW HIGH INTENSITY LED DOT

SPEC SHEET

DIMENSIONS

PHYSICAL

Diameter ..... 72 mm (2.9 in.)
Height with clear front ..... 34 mm (1.4 in.)
Height with dome front ..... 49 mm (2 in.)
Height with directional front ..... 43 mm (1.7 in.)

Weight, clear front and dome front models ..... 300 g (0.7 lbs.)
Weight, directional front models ..... 350 g (0.8 lbs.)

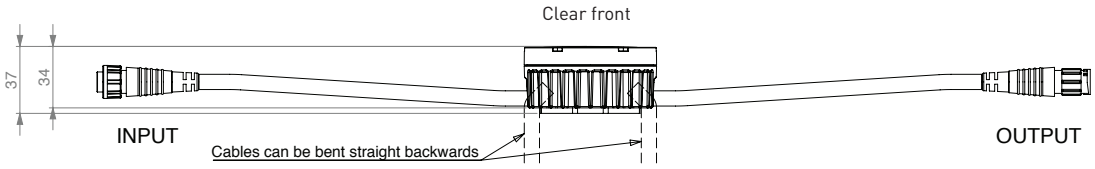

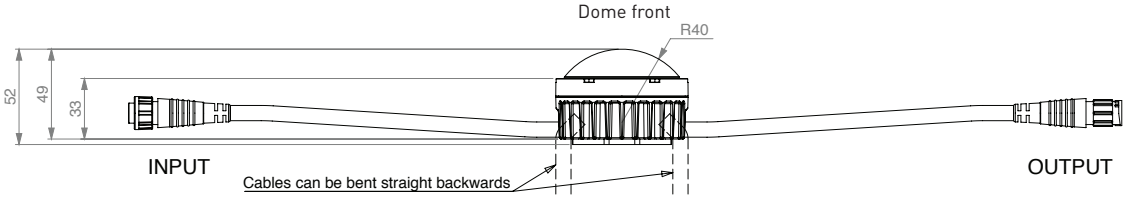

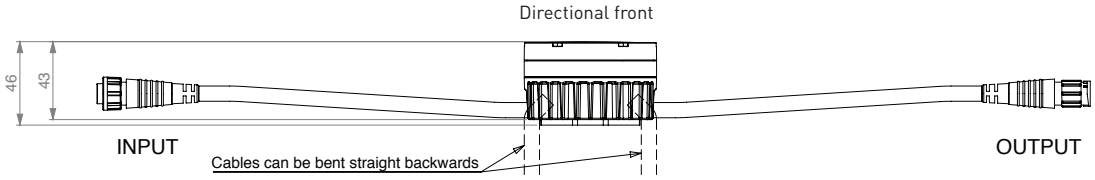

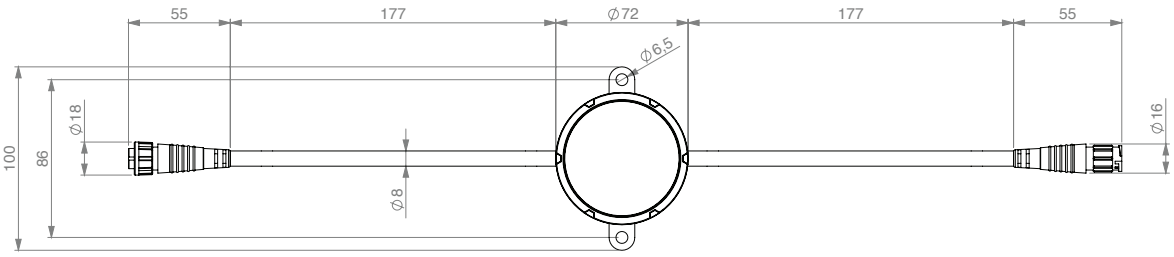

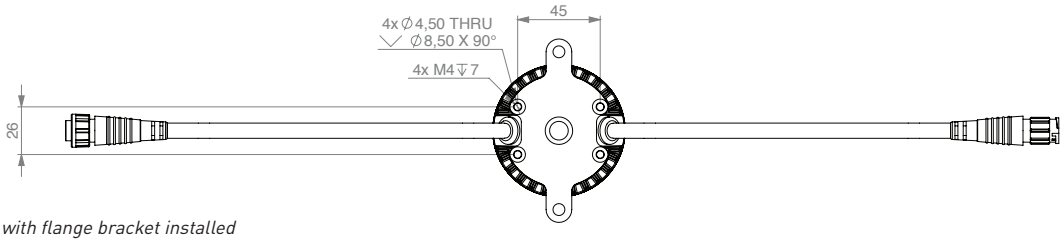

Shown with flange bracket installed

HARMAN PROFESSIONAL INC. • 8500 BALBOA BOULEVARD • NORTHRIDGE • CA 91329 • USA • +1 818 893 8411

©2019 HARMAN Professional. All rights reserved. Martin® is a registered trademark of HARMAN Professional Inc. registered in the United States and/or other countries.
Features, specifications, and appearance are subject to change without notice. Rev. 201905