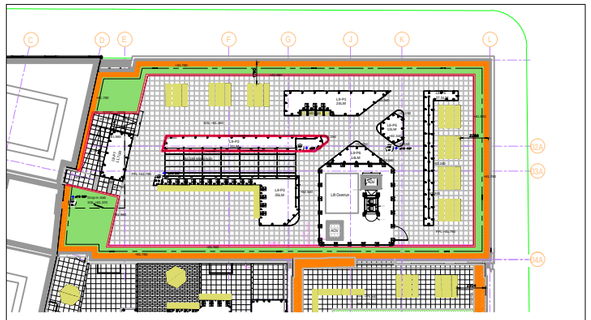

1:500 - Level 09 GA

Materials
Planters: 3mm Thk M.S

Finish
Zinc Prime & PPC Ral 7006 (Matt)

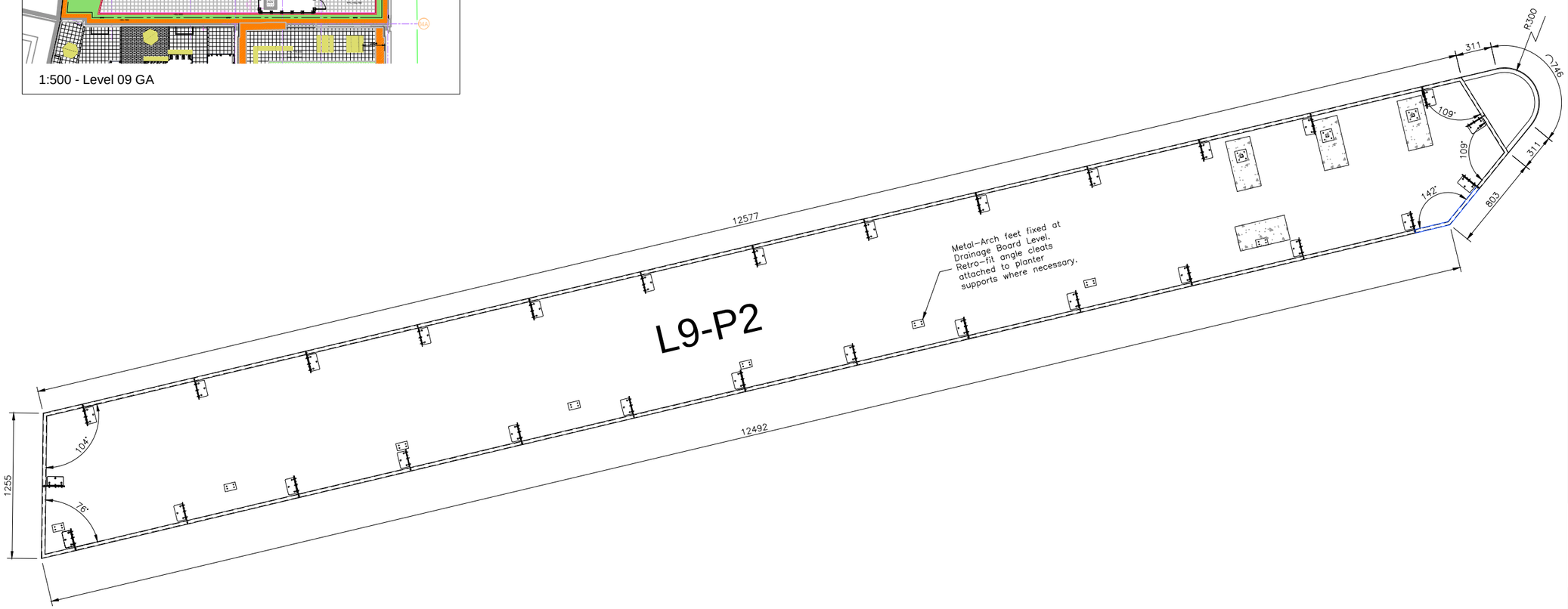

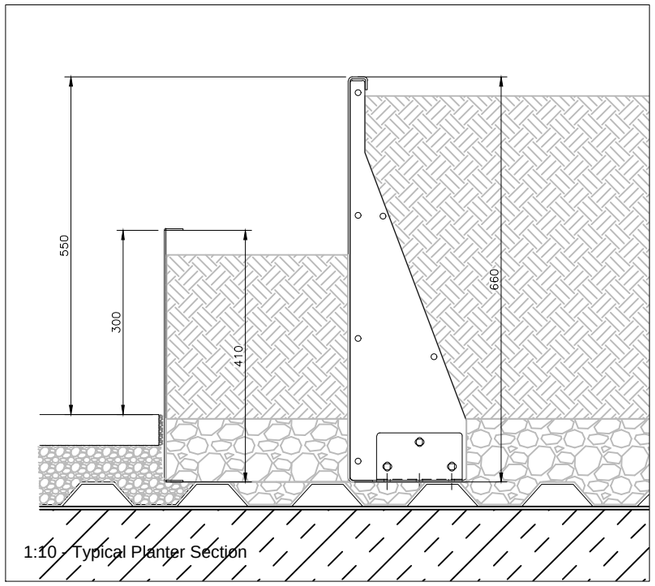

1:10 - Typical Planter Section

Notes:

1. THE COPYRIGHT OF THIS DRAWING IS VESTED IN URBAN ROOFSCAPES AND IT MAY NOT BE REPRODUCED IN WHOLE OR PART OR USED FOR THE MANUFACTURE OF ANY ARTICLE WITHOUT THE EXPRESS PERMISSION OF THE COPYRIGHT HOLDERS.

2. WORK TO FIGURED DIMENSIONS ONLY.

3. THIS DRAWING IS TO BE READ IN CONJUNCTION WITH ALL RELEVANT ARCHITECT'S, SERVICE ENGINEER'S AND UR DRAWINGS AND SPECIFICATIONS.

REV:	DESCRIPTION:	BY:	DATE:
P01	Trellis pads added	LF	28.06.22

STATUS: FOR APPROVAL

DRAWN BY:

URBAN ROOFSCAPES

CLIENT:

ARCHITECT:

SITE: Ancoats
Rochdale Rd, Manchester

TITLE: Level 9
Planter 02

SCALE AT A3:	DATE:	DRAWN:	CHECKED:
1:40	30.05.22	LF	

DRAWING NO:	REVISION:
ANC-UR-0422-L9-P2	P 01