Lally
TREE MANAGEMENT

Report No: LTM0549.MS.01

Date: 08/06/2022

Project: 170 & 172 Wythenshawe Road, Northern Moor, M23 0PF

BS 5837:2012
Method Statement

Inspection Record.

Date of Inspection	Surveyor
08/06/2022	Matthew Lally. FdSc MArborA

Lally Tree Management.
36 Goldsworthy Road, Urmston, Manchester, M41 8US
[T] 07305 740120 [E] matt@lallytreemanagement.co.uk [W] https://www.lallytreemanagement.co.uk/

This report is the property of Lally Tree management. This report may only be reproduced or disclosed to third parties with express written consent from Lally Tree Management.

Revision	Date	Prepared by	Status
Final	08/06/2022	M. Lally	Final

Contents

1.0 Discussion 4
2.0 Method Statement 5
2.1 Tree Works 5
2.2 Protective Fencing 5
2.3 Additional Precautions Outside Fenced Areas 6
2.4 Cellular Confinement System. 6
2.5 Pre-commencement Site meeting 6
2.6 Summary of Methodology for the Protection of the Trees 7
2.7 Site Briefing 7
Appendix One Tree Plan
Appendix Two Tree Protection Fencing
Appendix Three Construction of Special Surfaces

1.0 Discussion

1.1 The majority of the root system of a tree is in the surface 600mm of the soil extending radially for distances frequently in excess of the trees height. Beyond the main structural roots (close to the base of the trunk), the root system rapidly sub-divides into smaller diameter roots: off this main system, a mass of fine roots develops.

1.2 The shape of the main structural roots develops in response to the need for the tree to have physical stability. Beyond these major roots, root growth and development is influenced by the availability of water and nutrients. Unless conditions are uniform around the tree, which would be unusual, the extent of the root system will be very irregular and difficult to predict. It will not generally show the symmetry seen in the branch system.

1.3 The parts of the root system, which are active in water and nutrient uptake, are very fine, typically less than 0.5mm diameter. They are short lived, developing in response to the needs of the tree, with the majority dying each winter. It is *essential* that conditions in the soil remain conducive to the healthy growth of these fine roots so that the water and nutrients necessary for healthy tree growth can be absorbed.

1.4 All parts of the root system, but especially the fine roots, are vulnerable to damage. Once they are damaged, water and nutrient uptake will be restricted until new roots have regenerated. Vigorous young trees will be capable of rapid regeneration, but over mature trees will respond slowly, *if at all*.

1.5 In order to live and grow, roots need oxygen from the soil. Respiration by the roots and other soil organisms depletes this oxygen and increases carbon dioxide levels in the soil; a correct balance of these gases is normally maintained by diffusion between the soil and the atmosphere. Anything, which disturbs this balance, will affect the condition of the root system.

1.6 The factors that most commonly affect this diffusion adversely, and therefore damage roots, are the following: -

a) Compaction of the ground, which reduces the space between soil particles. This is particularly important on clay soils. A single passage by heavy equipment on clay soils or storage of heavy materials can cause significant damage.
b) Changing soil levels, even for a few weeks.
c) Covering the root area with impervious surfaces.
d) A rise in the level of the water table. Roots can tolerate submersion for short periods. But a permanent rise will deplete the soil of oxygen.

1.7 Serious damage is often caused during preliminary site works by stripping the topsoil. For this reason, such works should be avoided until protective fencing has been erected.

1.8 Excavations in the rooting area can sever roots. As the majority of roots are in the surface 600mm, even shallow excavations can cause damage.

1.9 Excavations for foundations, landscaping or service trenches are usually sufficiently deep to sever most of the roots, and it should therefore be assumed that all parts of the root system beyond the excavation would no longer serve the tree.

1.10 Excavation or soil stripping which sever or damage the roots may impair the stability of the tree and make it dangerous.

2.0 Method Statement

Before any form of development commences on the site the following works should be undertaken: -

2.1 Tree Works (See Tree Removal Plan in Appendix 1)

Tree No.	Species	Proposed Works to Facilitate Development.
T1#	*Holly*	*No Action*
T2#	*Oak*	*No Action*
T3#	*Oak*	*No Action*
T4#	*Holly*	*No Action*
T5#	*Oak*	*No Action*
T6#	*Holly*	*No Action*
T7#	**Magnolia**	**Remove**
T8#	*Holly*	*No Action*
T9#	*Cypress*	*No Action*
T10#	**Plum**	**Remove**
T11#	**Elder**	**Remove**
T12#	*Cypress*	*No Action*

All tree works to be undertaken in line with BS3998:2010. Tree Work. Recommendations

2.2 Protective Fencing

2.2.1 All fencing used on the site should fully comply with BS 5837:2012 (Trees in Relation to Construction – Recommendations).

2.2.2 The fencing should be strong and suitable for local conditions. It should also take into account the degree of construction activity on the site.

2.2.3 The fencing should be at least 2.3m in height and should be erected with both a vertical and horizontal scaffolding framework capable of withstanding impact, with vertical tubes spaced at a maximum of 3 m. This should support weldmesh panels which should be securely fixed with wire or scaffold clamps.

2.2.4 Notices should also be erected on the fencing stating, ‘Protected Area - No operations within fenced area’.

2.2.5 The positioning of the protective fencing is also very important and should be erected in the proposed location identified in appendix one. Once the fence has been erected it should never be crossed and particular care should be taken not to store any materials or soil within the protected area.

2.3 Additional Precautions Outside Fenced Areas

2.3.1 Oil, bitumen, cement or other material likely to cause damage to the tree will not be stacked or discharged within 10m of the trees stem or within the protective area. Also, materials in general will not be stacked or discharged within the exclusion zone.

2.3.2 Concrete mixing and washing will not be carried out within 10m of any retained trees.

2.3.3 Fires will not be lit beneath the foliage or in a position where the flames could extend to within 5m of the foliage, branches or trunk. If the fire is large, then this may necessitate a distance of at least 20m.

2.3.4 Trees that are to be retained will not be used as anchorage for equipment.

2.3.5 Notice boards, telephone cables, or other services will not be attached to any part of the retained tree.

2.3.6 Care should be taken when using cranes or other equipment near the canopy of the retained trees. Also, any trees to be felled in proximity to the retained trees should be done so with particular care.

2.4 Cellular Confinement System

2.4.1 The use of a cellular confinement system will be employed to create the hardstanding areas that encroach into the RPA of T12# without having a detrimental effect.

2.4.2 A cellular confinement system provides a load transfer mattress which prevents direct loads on tree roots and reduces the bearing pressure on subsoil's by stabilising aggregate surfaces against rutting under wheel loads.

2.4.3 A proposed methodology and cross-sectional diagram for the construction of the access way can be found in appendix three.

2.5 Pre-commencement Site meeting

2.5.1 Prior to commencement of site works, a meeting must take place including the site manager and an arboricultural consultant. This meeting will allow further discussion of the programme of works, tree protective measures, locations of areas for storage/site organisation and the agreement of any changes to the method statement that may be required which will be formally updated and approved as required.

2.6 Summary of Methodology for the Protection of the Trees

1) Pre commencement site meeting
2) Tree removal
3) Site briefing for personnel
4) Installation of protective fencing
5) Installation of cellular confinement system
6) Implementation of development
7) Completion of development works
8) Completion signed off
9) Removal of protective fencing
10) Soft landscaping works

2.7 Site Briefing

2.7.1 The site manager is responsible for ensuring that all personnel are made fully aware of the constraints posed by the retained trees on site and that there are measures in place to protect these trees, this includes having full access to the Arboricultural Method Statement and Tree Protection plan (TPP).

Appendix One

Tree Plan

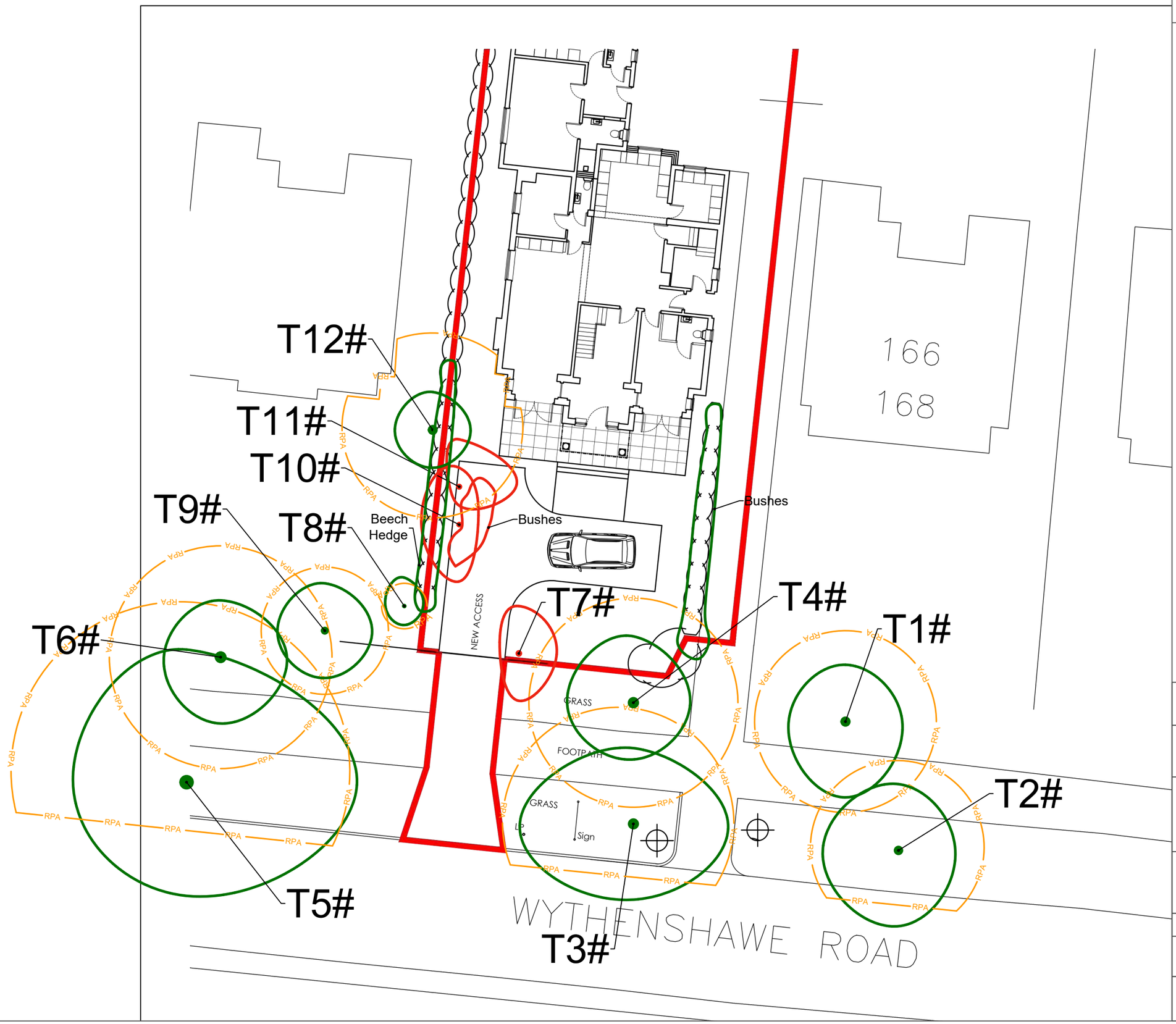

Do not scale this drawing (printed or electronic version).

Contractors must check all dimensions from site

This drawing is for use on this site only and should be used in conjunction with all relevant consultants drawings..

LEGEND

N

- Retained Trees
- Removed Trees
- Root Protection Areas

Lally TREE MANAGEMENT

Scale: 1:200@A3	Date: 08/06/2022

Job: LTM0549.AIA.01

Address: 170 & 172 Wythenshawe Road, M23 0PF

Client: Mr & Mrs Royal

Drawing Number: LTM0549.TRP.01

Drawn by: Matthew Lally

TREE REMOVAL PLAN

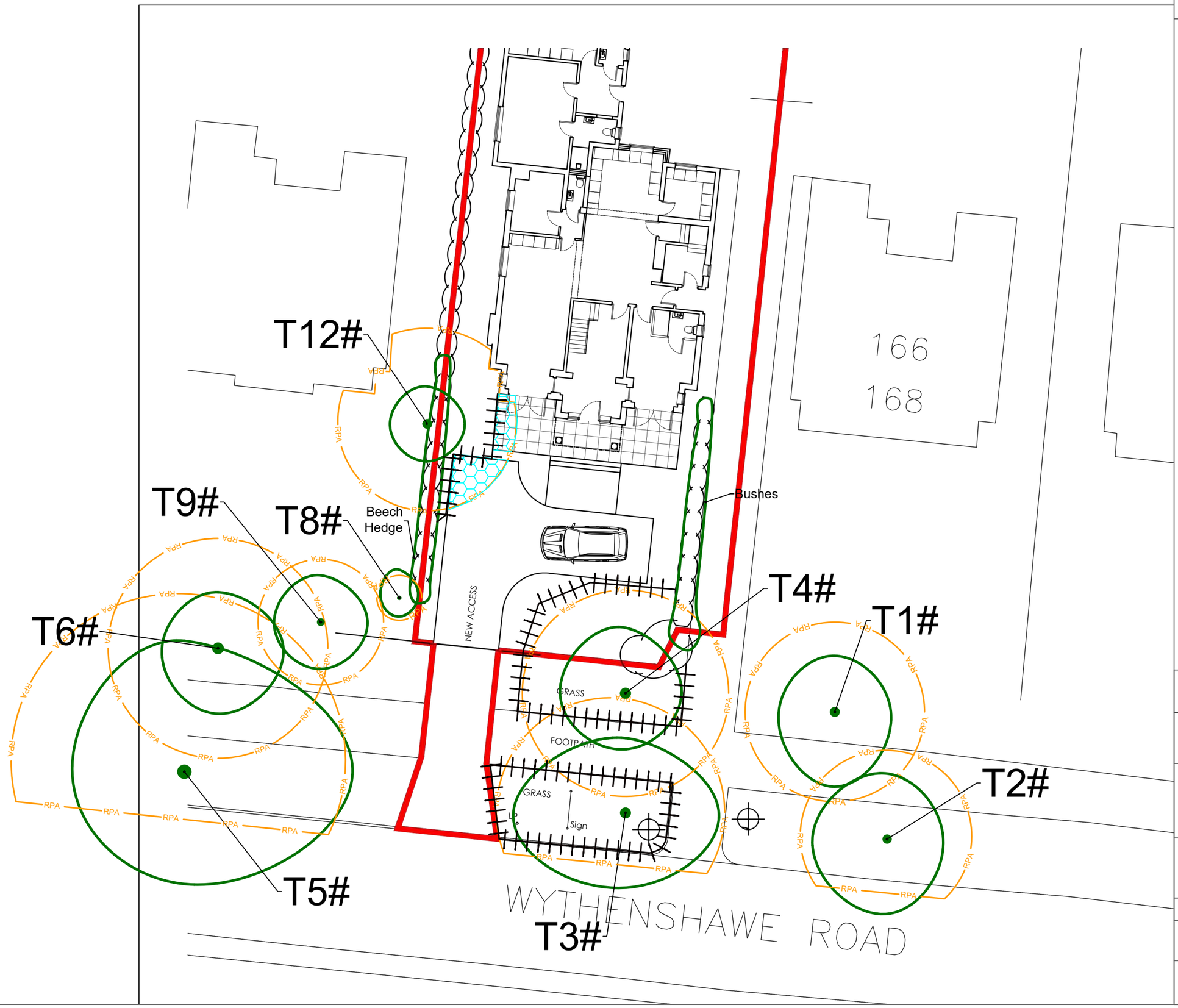

Do not scale this drawing (printed or electronic version).

Contractors must check all dimensions from site

This drawing is for use on this site only and should be used in conjunction with all relevant consultants drawings..

LEGEND

N

- Retained Trees
- Removed Trees
- Root Protection Areas
- Protective Fencing (Metal)
- Cellular Confinement System
- # Position estimated on site

Lally TREE MANAGEMENT

Scale: 1:200@A3	Date: 08/06/2022

Job: LTM0549.AIA.01

Address: 170 & 172 Wythenshawe Road, M23 0PF

Client: Mr & Mrs Royal

Drawing Number: LTM0549.TPP.01

Drawn by: Matthew Lally

TREE PROTECTION PLAN

Appendix Two

Tree Protection Fencing

Tree Protection Fencing (BS5837: 2012)

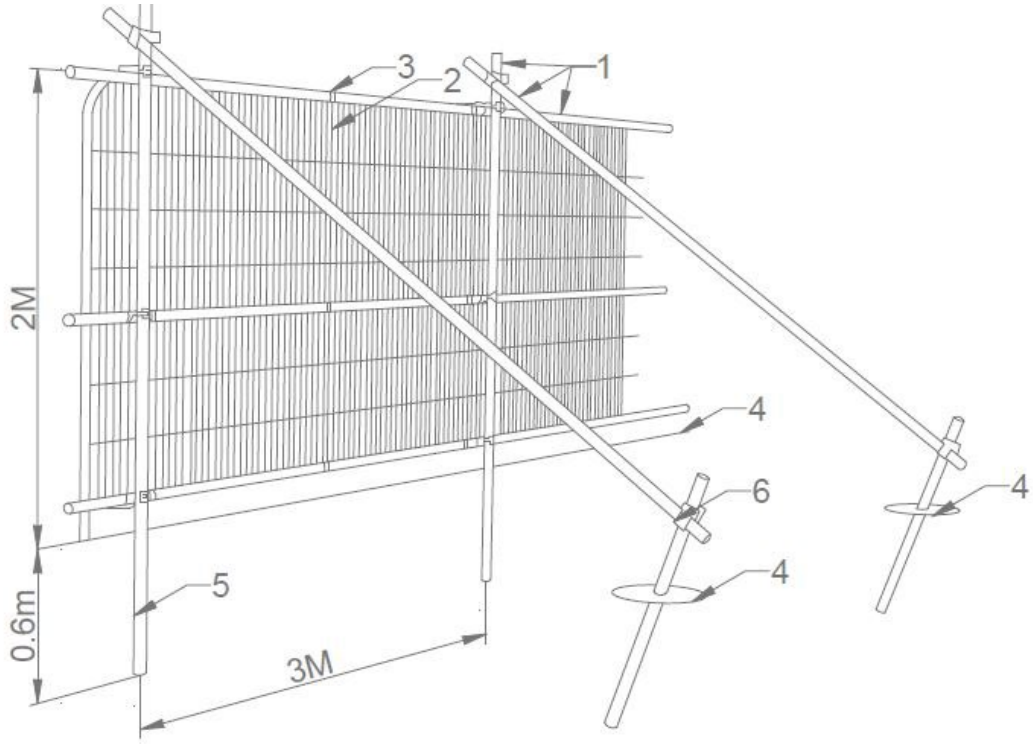

Key

1 Standard scaffold poles
2 Heavy gauge 2m tall galvanised tube and welded mesh infill panels
3 Panels secured to upright and cross-members with wire ties
4 Ground level
5 Uprights driven into the ground untill secure (minimum depth 0.6m)
6 Standard scaffold clamps

Protective fencing Notice to attached to fencing

Appendix Three

Construction of Special Surfaces

METHODOLOGY FOR THE CONSTRUCTION OF HARDSTANDING AREAS WITHIN RPA OF RETAINED TREES

The following methodology supports the drawing indicating the construction of the hardstanding. The methodology is prepared on the basis of the sequence of operations necessary to complete the hardstanding with the minimum damage to the trees proposed for retention.

- Surface layer to be scraped off. This can be done either by hand or by very small machinery.
- Erect protective fencing to the edge of the construction area.
- Spread a sub grade material over the length of the hardstanding to fill any small ruts.
- Construct edging using treated timber if required.
- Lay geotextile mat over smoothed area.
- Extend the Geoweb perforated tree root protection system over the area of the hardstanding with sufficient overlap such that kerbs can be constructed on top of the Geoweb.
- Fill the voids within the Geoweb with reduced fines Type 1 material working into the site over the top of the Geoweb.
- Lay kerbs and surface over the Geoweb such that the construction binds itself together.
- Construct finished surface as required in line with guidance illustrations below.

GEOWEB BASED CONSTRUCTION – (INDICATIVE ONLY)

Depth of confinement system variable according to use- refer to manufacturer

Tarmac Surface

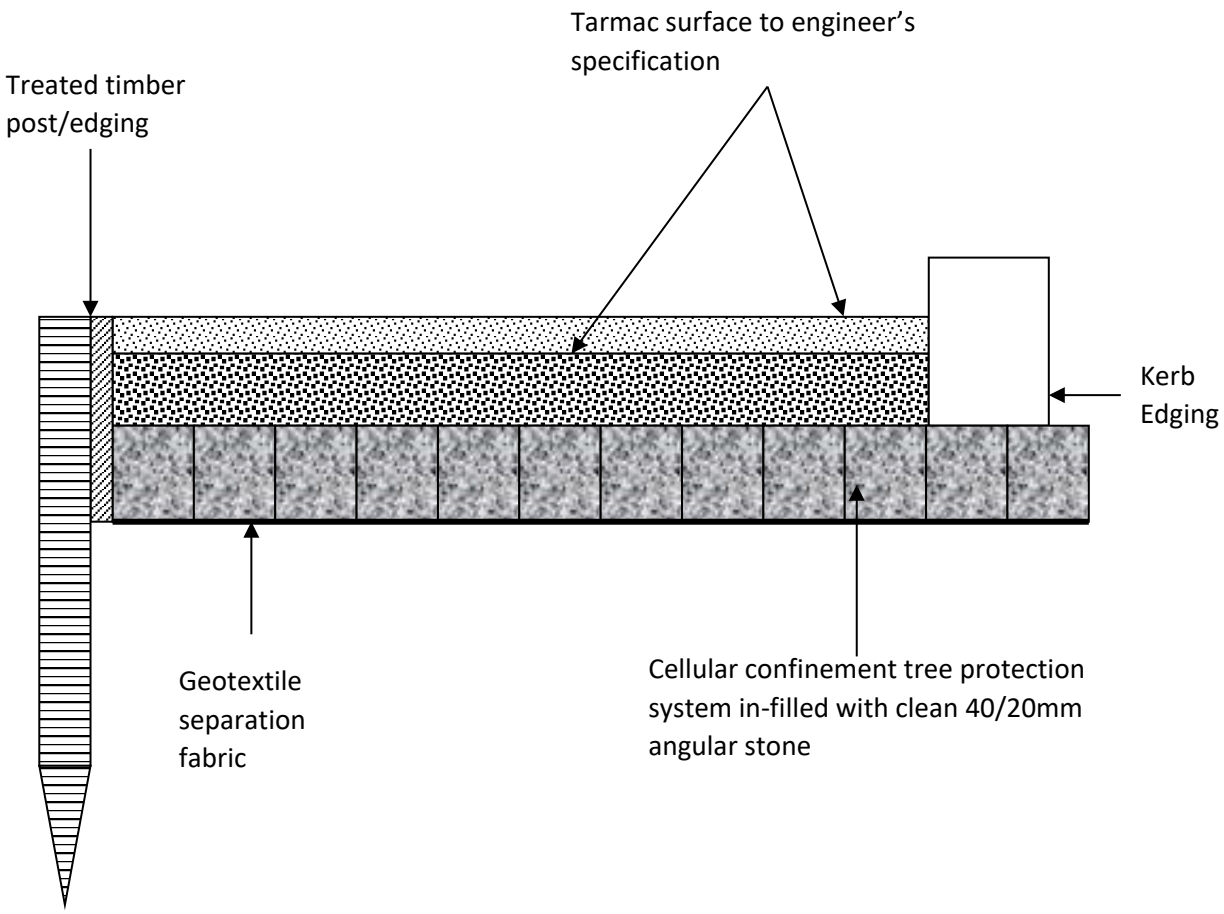

Block Paved Surface

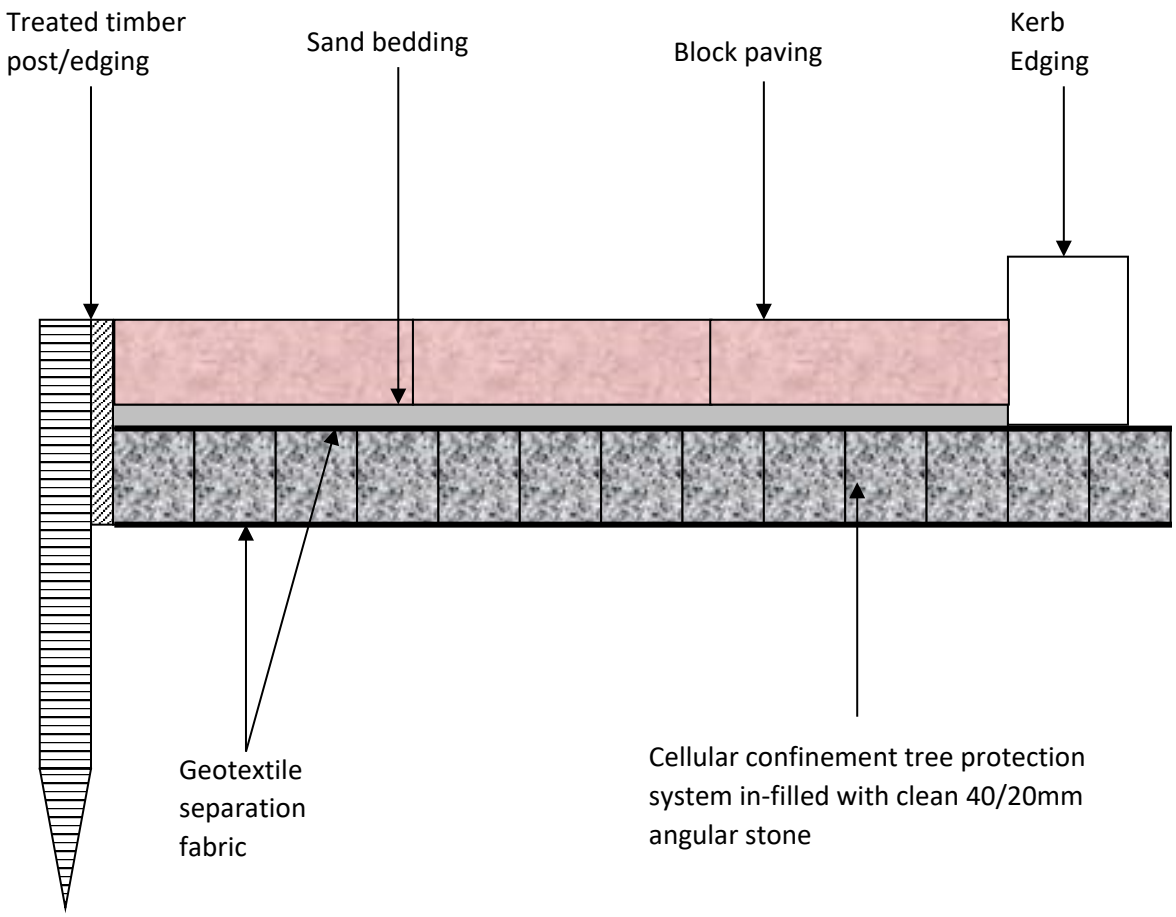
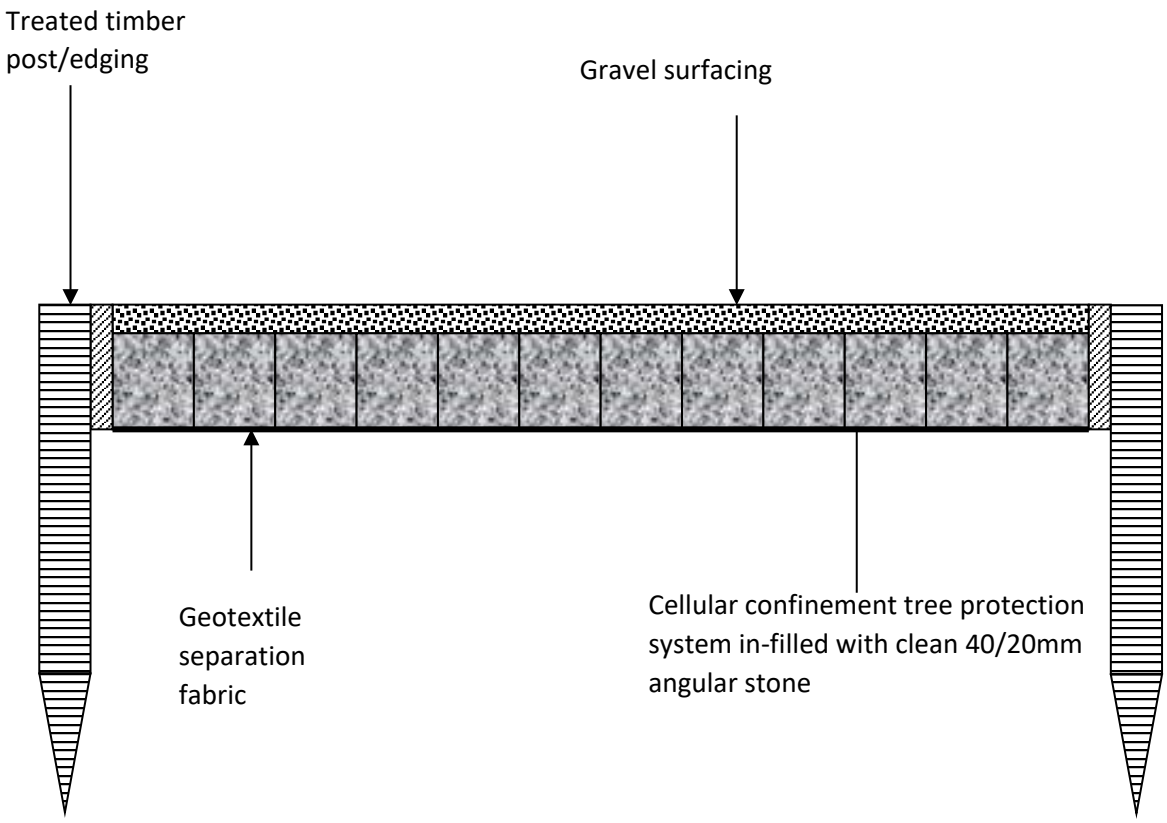
Gravel Surface