July 2022 / 0799-RFM-XX-00-SP-L-0003-S2-P03

The Castings, Manchester

Planning Condition 11 Landscape Specification

www.re-formlandscape.com

re-form

A Contents

A. Contents

B. Introduction

01 Site Overview

02 Site Context

03 Site Plans

C. Level 01

04 Hardworks

05 Street Furniture

06 Softworks

D. Levels 01 & 21

07 Hardworks

08 Furniture & Structures

09 Softworks

E. Soft Landscape Specification

10 Planting

11 Soils

12 Shrub Planting

13 Herbaceous Planting

F. Landscape Management

14 Site Wide Management

15 Hard Surfaces

16 Planting Maintenance

G. Product Information Appendix

B Introduction
Site Overview

The purpose of this document is to provide specification information on materials and maintenance for the purposes of discharging Planning Condition 11 by Manchester City Council.

Site Overview

The development consists of three primary landscape areas;

- Ground floor public realm, including Longacre Street, Heyrod Street footpath and part of 'The Square'
- 2no. residents' roof terraces at Level 01
- 1no. residents' roof terrace at Level 21

Please refer to the accompanying Detail General Arrangements for further details on the layout and materials.

Site Context

The development is one of six plots within a wider Strategic Regeneration Framework area named 'Portugal Street East SRF'. The proposals seek to regenerate and transform the neighbourhood surounding the Piccadilly train station and create a sense of place for the area. The development sits on the corner of one of two significant public realm spaces within the SRF, 'The Square'. It also lies between the two main north-south pedestrian routes, connecting the city centre to the outer suburbs to the north.

Level 00

The public realm works associated with the development extend out ot the edge of Heyrod Street, complete the remaining elements of The Square and capture much of Longacre Street.

The approach to the landscape maintains the characteristics established within the public realm application, including access, circulation, frontages and materiality. The intention is for the plot to stitch easmlessly into the wider PSE masterplan.

The building itself offers active frontage to Longacre Street, Heyrod Street and The Square through the inclusion of ground floor retail uses and generous communal spaces associated with the entrances. These active frontages are supported in the landscape through generous spill out spaces, broad clear pathways and public seating areas.

Levels 01 & 21

The large roof terraces provide multiple social spaces for residents and cater to a variety of group sizes. A series of bold interventions such as the Castings structure, swinging seats and suspended festoon lighting creates a sense of fun whilst performing vital roles in framing spaces, providing a human scale and a welcoming environment.

Quality materials and imaginative detailing creates a unique aesthetic that is synonymous with this development.

B Introduction
Site Plans

Level 00

Public Realm

Level 01

Roof Terrace

Level 21

Roof Terrace

C Level 00
Hardworks

Paving Type 1a Concrete Block Paver

Description	Flexibly laid concrete block paving to pedestrian areas with occasional service vehicle access as per SRF proposals. Laid with drain joint to provide permeable surface.
Supplier	Hardscape Products Ltd www.hardscape.co.uk +44 (0) 1204 565500
Product	Kellen Breccia
Colour	Magma Mix
Nominal sizes	100 x 300 x 80mm thickness 150 x 300 x 80mm thickness
Accessories	Hardscape Drain Joint

Paving Type 1b Concrete Block Paver

Description	Paving type 1b; Rigidly laid concrete block paving to layby with vehicle access as per SRF proposals
Supplier	Hardscape Products Ltd www.hardscape.co.uk +44 (0) 1204 565500
Product	Kellen Breccia
Colour	Magma Mix
Nominal sizes	150 x 300 x 80mm thickness

Paving Type 2a Macadam with Buff Chippings

Description	Pedestrian grade macadam surfacing with buff chippings to footpaths
Supplier	NatraTex www.natratex.co.uk 01594 826768
Product	ChipTex or similar approved
Colour	Black top with buff chippings
Nominal sizes	10mm

Paving Type 2b Macadam with Buff Chippings

Description	Vehicular grade macadam surfacing with buff chippings to footpaths
Supplier	NatraTex www.natratex.co.uk 01594 826768
Product	ChipTex or similar approved
Colour	Black top with buff chippings
Nominal sizes	10mm

C Level 00
Hardworks

Paving Type 3 Permeable Resin Bound Gravel

Description	Paving type 3; Pedestrian grade permeable resin bound natural aggregate gravel to tree pits as per SRF proposals
Supplier	SureSet UK Ltd www.sureset.co.uk 0800 612 6501
Product	Natural Aggregate
Colour	Winter Bronze
Aggregate Size	6mm
Binder	Clear polyurethane resin

Edging Types 1a,c,d PCC Conservation Kerb

Description	Edging type 1; pre-cast concrete conservation kerb
Supplier	Marshalls www.marshalls.co.uk +44 (0) 330 057 4472
Product	RK6500000 or similar approved
Colour	Silver Grey
Nominal sizes	145 x 255 x 915mm
Special units	Right angle corner piece
Installation	50mm upstand or laid flush; refer to drawings for locations

Edging Type 1b PCC Conservation Kerb

Description	Pre-cast concrete conservation kerb to rain gardens
Supplier	Marshalls www.marshalls.co.uk +44 (0) 330 057 4472
Product	RK6500000 or similar approved
Colour	Silver Grey
Nominal sizes	145 x 255 x 915mm
Notes	120mm upstand Units to be laid with 50mm gaps to allow water to drain from surrounding surfaces into rain garden; ; refer to drawings for locations

Edging Type 2 PCC Conservation Wide Kerb

Description	Wide pre-cast concrete conservation kerb
Supplier	Marshalls www.marshalls.co.uk +44 (0) 330 057 4472
Product	RK6500000 or similar approved
Colour	Silver Grey
Nominal sizes	255 x 205 x 915mm
Notes	Units to be laid with flush; ; refer to drawings for locations

C Level 00
Hardworks

Edging Type 3 Steel Edging

Description	Flush steel edging to edges of resin bound gravel paving
Supplier	Kinley www.kinley.co.uk +44 (0)1580 830688
Product	AluExcel Aluminium Edge Restraint AE100 Rigid
Colour	M - Mill finish (silver)
Nominal sizes	100mm height
Special units	90 degrees welded corners

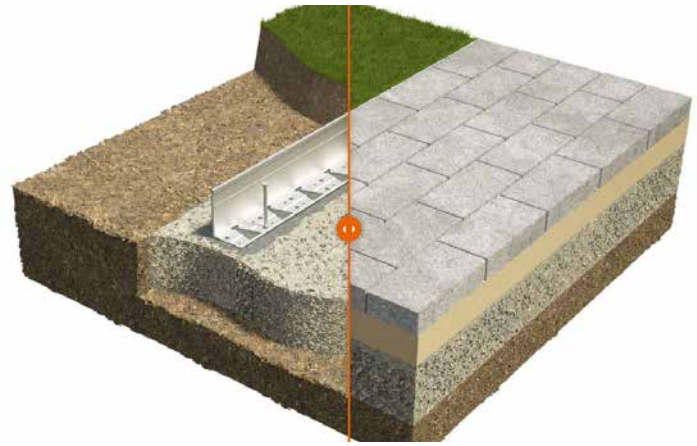

Edging Type 4 Concrete Flags

Description	Edging type 4; Rigidly laid concrete flag paving to edge of square areas with potential for occasional service vehicle access as per SRF proposals
Supplier	Hardscape Products Ltd www.hardscape.co.uk +44 (0) 1204 565500
Product	Kellen Breccia
Colour	Magma Mix
Nominal sizes	500 x 500 x 80mm thickness

C Level 00
Street Furniture & Structures

Steel columns with catenary lighting

Description	Bespoke powder coated steel columns with permanent catenary lighting
Supplier	Studiotech (UK) Ltd info@studiotech.co.uk +44 (0) 0161 292 9000
Product	Bespoke
Colour	RAL 3003, 30% Gloss
Nominal sizes	4m height, refer to drawings

Timber benches

Description	Timber bench with metal frame, longer length legs for root fixing, back and arm rests
Supplier	Langely Design www.langelydesign.co.uk +44 (0)1793 759 461
Product	Bespoke; details as per SRF proposals
Materials	FSC Certified Sapele timber, smooth planed finish
Colour	Steel, polyester powder coated, RAL 7013
Nominal sizes	2000 x 479 x 450mm (height above ground)
Accessories	Backrests, armrests and longer length legs to allow for root fixing

Timber seating platforms and cubes

Description	Bespoke seating platforms and cubes to match bench above; metal frame
Supplier	Langely Design www.langelydesign.co.uk +44 (0)1793 759 461
Product	Bespoke; details as per SRF proposals
Materials	FSC Certified Sapele timber, smooth planed finish
Colour	Steel, polyester powder coated, RAL 7013
Nominal sizes	2000 x 1000 x 450mm height above ground (platform) 450 x 450 x 450mm height above ground (cube)
Accessories	Backrests, armrests and longer length legs to allow for root fixing; refer to drawing for further detail

Granite seating wall with timber seating tops

Description	Solid granite unit seating wall to match adjacent SRF proposals
Supplier	Marshalls www.marshalls.co.uk +44 (0) 330 057 4472
Product	Neso granite or similar approved
Quarry of Origin	Villa Real, Portugal Cycles within SRF Galvanised finish only
Nominal sizes	Refer to drawing
Sustainability	Ethical index score 3.5 minimum

C Level 00
Street Furniture & Structures

Litter bins

Description	Powder coated metal litter bins with cover
Supplier	Vestre UK www.vestre.com +44 (0) 7780 770 945
Product	1544 Bloc litter bin 140L or similar approved
Colour	RAL 7013
Accessories	Galvanised steel liner; hingers, locking side door

Bollards - Demountable

Description	Root-fixed powder coated metal bollard with sloped top
Supplier	Furnitubes International Ltd. www.furnitubes.com +44 (0) 20 8378 3200
Product	Zenith Sloped Bollard ZEN 851 or similar approved
Colour	RAL 8000
Nominal sizes	1000mm height above ground, 300mm below ground
Standards	BS 8300

The Square Lighting Columns

Description	Powder coated aluminium alloy lighting column 3600mm, LED 4000K, to coordinate with wider SRF scheme
Supplier	Platek Lighting www.platek.eu +39 (0) 30 68 18 201
Product	T4 5034664
Colour	RAL TBC to coordinate with wider SRF scheme
Nominal sizes	3600mm

RAL 7016

Cycle stands

Description	Powdercoated steel cycle stands to public realm
Supplier	Furnitubes International Ltd. www.furnitubes.com +44 (0) 20 8378 3200
Product	Ribbon Cycle Stand RIB 750
Colour	Cycles adjacent to building powder coated with colour TBC Cycles within SRF Galvanised finish only
Nominal sizes	800mm above ground, 300mm below ground

C Level 00
Softworks

Proposed tree in soft landscape

Description	Semi-mature tree in soft landscape
Supplier	Van den Berk or similar approved
Tree size	As per planting schedule
Accessories	Platypus deadman anchoring system, irrigation pipe, tree pit drainage

Proposed tree in hard landscape

Description	Semi-mature tree in hard landscape with modular suspended pavement and inset paving tree grille
Supplier	Van den Berk or similar approved Deeproot www.deeproot.com +44 (0) 1204 565500
Product	Silva Cell x 3 (1092 x 600 x 1200mm)
Tree size	As per planting schedule
Nominal sizes	Must achieve minimm 15m^3 per tree
Accessories	Platypus deadman anchoring system, irrigation pipe, tree pit drainage; GreenBlue Urban 'Zeta' tree grille, 1200 x 1200mm to match SRF specification

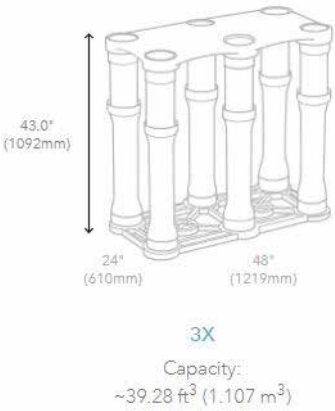

Proposed herbaceous planting

Description	Mixed herbaceous planting to soft landscape areas as per planting plan
Supplier	Johnsons of Whixley or similar approved www.nurserymen.co.uk
Product	As per planting schedule
Nominal sizes	2 litre pots minimum
Density	7 plants per m^2 minimum, refer to planting schedule
Mulch	75mm bark mulch

Proposed rain garden planting

Description	Mixed herbaceous planting to rain garden landscape areas as per planting plan
Supplier	Johnsons of Whixley or similar approved www.nurserymen.co.uk
Product	As per planting schedule
Nominal sizes	2 litre pots minimum
Density	7 plants per m^2 minimum, refer to planting schedule
Mulch	75mm gravel aggregate mulch
Accessories	Positive drainage outlet

D Levels 01 & 21
Hardworks

Granite paver - bedded system

Description	European sourced granite pavers on a bedded rooftop system
Supplier	Hardscape www.hardscape.co.uk 01204 565 500
Product	Magma granite
Colour	600 x 200 x 30mm
Accessories	Bauder bedded paving system for rooftops www.bauder.co.uk 0845 271 8800

D Level 01 & 21
Street Furniture & Structures

Raised metal planters

Description	Bespoke modular angled raised powder-coated metal planters with varying heights
Supplier	Kinley Systems www.kinley.co.uk +44 (0) 20 3146 7879
Product	Perimeta Prism Bespoke
Material	Galvanised mild steel, powder coated
Colour	Corten effect RAL 8023
Accessories	Welded corner pieces, integrated lighting and timber benches (see below)

Integrated timber benches

Description	Timber benches integrated into modular raised metal planters system
Supplier	Kinley Systems www.kinley.co.uk +44 (0) 20 3146 7879
Product	Perimeta Cantilever Offset Benches
Material	FSC Certified Sapele timber, smooth planed finish
Colour	Corten effect RAL 8023
Accessories	Integrated lighting, back rests, arm rests

Foldable chairs & tables and cube stools

Description	Powdercoated steel frame and timber topped dining tables and benches
Supplier	Vestre UK www.vestre.com +44 (0) 7780 770 945
Product	Air
Nominal sizes	393 x 1390 x 464mm (bench) 652 x 1640 x 754mm (table)
Material	Linseed oil proofed Nordic pine
Colour	RAL to coordinate with scheme colour palette, TBC

Foldable chairs & tables and cube stools

Description	Mix of powdercoated steel and steel with timber, foldable chairs and tables, and freestanding cube stools
Supplier	Vestre UK www.vestre.com +44 (0) 7780 770 945
Product	April GO (tables & chairs) Kong cube, free standing (stool)
Nominal sizes	450 x 506 x 785mm (chair) 877 diameter x 742mm (round table) 420 x 399 x 390mm (stool)
Material	Linseed oil proofed Nordic pine
Colour	RAL to coordinate with scheme colour palette, TBC
Accessories	Storage trolleys for foldable furniture available

D Level 01 & 21
Street Furniture & Structures

Swinging seats

Description	Bespoke hardwood swinging seat with powdercoated steel frame and tensile cables
Supplier	Bespoke fabrication by specialist supplier
Product	Bespoke
Nominal sizes	1356 x 1451 x 868mm
Colour	FSC Certified Sapele timber, smooth planed finish
Accessories	Tensile wires with appropriate fixings as approved by engineer, refer to drawings for design intent

Bespoke metal 'castings' structure

Description	Powder coated steel I-beam structures with integrated lighting
Supplier	Specialist fabricator
Product	Bespoke
Nominal sizes	7040 x 3000 x 300mm
Colour	RAL 7016 TBC
Accessories	Swinging seats (see above) and integrated lighting, refer to drawings for design intent

Steel columns with catenary lighting

Description	Bespoke powder coated steel columns with permanent festoon lighting
Supplier	Studiotech (UK) Ltd info@studiotech.co.uk +44 (0) 0161 292 9000
Product	Bespoke
Colour	RAL 6026, 30% Gloss, TBC
Nominal sizes	3m height, refer to drawings for design intent

D Level 01 & 21
Softworks

Multi-stem tree

Description	Semi-mature multi-stem tree
Supplier	Van den Berk or similar approved
Tree size	As per planting schedule
Form	Umbrella form, with minimum 1m clear stem
Details	400mm topsoil, 600mm subsoil, rootball on 200mm sand, with mineral mulch topping 50mm
Accessories	Platypus deadman anchoring system, irrigation pipe, tree pit drainage

Herbaceous planting

Description	Mixed herbaceous planting to soft landscape areas as per planting plan
Supplier	Johnsons of Whixley or similar approved www.nurserymen.co.uk
Product	As per planting schedule
Nominal sizes	2 litre pots minimum
Density	7 plants per m^2 minimum, refer to planting schedule
Details	300mm topsoil, 300mm subsoil, 75mm mineral mulch, silver grey

Tree pot

Description	Lightweight fibre reinforced cement plant pot for
Supplier	Iota Garden www.iotagarden.com +44 (0) 1934 522617
Product	Boulevard Kyoto 120
Form	Umbrella form, with minimum 1m clear stem
Colour	RAL 7016
Nominal Size	1200mm diameter, 900mm height

Specimen Plant Pots

Description	Lightweight fibre reinforced cement plant pots for specimen plants
Supplier	Iota Garden www.iotagarden.com +44 (0) 1934 522617
Product	Boulevard Kyoto 53
Colour	RAL 7016
Nominal sizes	530mm diameter, 550mm height

E Outline Landscape Specification
Soft Landscape

Planting

Times of year for planting

- Deciduous trees and shrubs: Late October to late March.
- Conifers and evergreens: September/ October or April/ May.
- Herbaceous plants (including marginal): September October or March/ April.
- Container grown plants: At any time if ground and weather conditions are favourable.
- Dried bulbs, corms and tubers: September/ October.
- Colchicum (crocus): July/ August.
- Green bulbs: After flowering in spring.

Watering

- Quantity: Wet full depth of topsoil.
- Application: Even and without damaging or displacing plants or soil.
- Frequency: As necessary to ensure establishment and continued thriving of planting.

Plants/ trees general

- Condition: Materially undamaged, sturdy, healthy and vigorous.
- Appearance: Of good shape and without elongated shoots.
- Hardiness: Grown in a suitable environment and hardened off.
- Health: Free from pests, diseases, discoloration, weeds and physiological disorders.
- Budded or grafted plants: Bottom worked. Root system and condition: Balanced with branch system.
- Standard: [The National Plant Specification].
- Species: True to name.
- Origin/ Provenance: [Grown in the United Kingdom for at least one growing season, unless otherwise approved].
- Definition: Origin and Provenance have the meaning given in the National Plant Specification.

Container grown plants/ trees:

- Growing medium: With adequate nutrients for plants to thrive until permanently planted.
- Plants: Centred in containers, firmed and well watered. Root growth: Substantially filling containers, but not root bound, and in a condition conducive to successful transplanting.
- Hardiness: Grown in the open for at least two months before being supplied.
- Containers: With holes adequate for drainage when placed on any substrate commonly used under irrigation systems.

Protection of existing grass:

- General: Protect areas affected by planting operations using boards/ tarpaulins.
- Excavated or imported material: Do not place directly on grass.
- Duration: Minimum period.

Planting bulbs/ corms/ tubers:

- Depth: Top of bulb/ corm/ tuber at a depth of approximately twice its height, base in contact with bottom of hole.
- Backfilling: Finely broken soil. Lightly firm to existing ground level.
- Scattering: Random. Plant bulbs/ corms/ tubers where they fall.
- Planting: Neatly remove a plug of turf and replace after planting.

3.2 Soils

General / Qualifications:

- This specification assumes the existing insitu subsoils are suitable for re use. Allowance should be made for analysis of subsoils at the detailed design stage.
- This specification assumes all topsoil is to be imported.
- An analysis of imported topsoil intended for use is to be provided for approval prior to installation of planting

Soil depths to planted areas

All soft landscape areas should include the following TOTAL depths of soils (topsoil and subsoil).

Wildflower meadow, lawns & Bulb area - 400mm
Shrub, Hedge planting - 600mm
Trees - 600-1000mm as drawings

E Outline Landscape Specification
Soft Landscape

Imported topsoil

- For general landscape purposes. To BS:3882 2015 Specification for Topsoils installed to the following depths:
- Wildflower meadow, lawn and bulb areas - 200mm
  Shrub, Hedge planting and trees - 400mm
- Organic fertilizer to be applied prior to planting.
- Contractor to provide soil anlaysis for approval prior to ordering.
- WIldflower meadows areas to comprise suitable low nutrient topsoil to limit weed competition

Imported subsoil

- This specification assumes the existing insitu subsoils are suitable for re use. However where required, imported topsoil should be to BS:8601: 2013 Specification for Subsoil and Requirements for Use and DEFRA's Code of Practice for the Sustainable Use of Soils on Construction Sites.
- Note;- Subsoil should be free draining and should contain no more than 70% sand content or 60% clay content.
- The following depths shall be provided. If not available in situ, subsoils shall be imported to make up the short fall
- Wildflowers, Lawn and Bulbs - 200mm
  Shrub, and hedge planting - 200mm
  Trees - 600mm
- Contractor to provide soil anlaysis for approval prior to planting.

3.3 Shrub/ Hedge Planting

- Refer to plant schedules for sizes, density and species
- Stock to be approved by Landscape Architect prior to ordering.
- Plant into 300mm depth imported topsoil (refer to section 1.5.2)
- Plants to be lightly firmed in after backfilling Water immediately after planting

3.4 Herbaceous Planting

- Refer to plant schedules for sizes, density and species
- Stock to be approved by Landscape Architect prior to ordering.
- Plant into 400mm depth imported topsoil Plants to be lightly firmed in after backfilling
- Water immediately after planting

3.5 Herbaceous Planting

- Material: High quality coarse grade bark mulch Purity: Free of pests, disease, fungus and weeds.
- Preparation: Clear all weeds. Water soil thoroughly. Coverage:
- All shrub, hedge and herbaceous planted areas covered with 50mm deep mulch.
- Trees- 800mm diameter to base of trees: 50mm deep

4.1 Site Wide Management

General conditions

- The works consist of the maintenance of large areas of decorative concrete paving, seating, lawns, high quality amenity planting, including semi-mature trees, shrubs and perennials.
- Use only machines and tools suitable for the site conditions and the work to be carried out. Use hand tools around trees, plants and in confined spaces where it is impracticable to use machinery.
- Good Practice - Where products are not fully specified they are to be suitable for the purposes of the works stated and in accordance with good horticultural practice, including the relevant provisions of current British Standard documents.
- Maintenance standards should at all times reflect the development's high quality status.

Chemicals

- Pesticides include herbicides, insecticides, fungicides and plant growth regulators. The use of pesticides is governed by legislation. The Contractor must comply with The Control of Pesticides Regulations 1986' made under the 'Food and the Environment Protection Act 1985', 'The Control of Substances Hazardous to Health Regulations 1988' made under the 'Health and Safety at Work Act 1974' and any other legislation enacted during the contract period.
- All pesticides must be products on the current list of Agricultural Chemicals Approval Scheme. All pesticide users shall comply with the conditions of approval relating to use clearly stated on the product label.
- The Contractor must comply with all relevant Codes of Practice issued by DeFRA. In particular where work is near water, comply with the Code of Practice for the Use of Herbicides on Weeds in Watercourses and Lakes'. Written approval from the Environment Agency should be obtained prior to the use of pesticides within these areas.
- A recognised nominated storekeeper's certificate of competence (BASIS) is required by a Contractor storing more than 200 litres of pesticides. All pesticides transported or stored in the Contractor's vehicles (regardless of quantity) shall be locked in a separate storage compartment in the vehicle or within a lockable container in pickups' that are bolted to the floor of the vehicle.
- The Contractor shall select the most appropriate and effective method for applying pesticide for each particular area or situation or for any particular use or specific work, and shall notify Leeds City Council of the type of pesticide, active ingredient, and method and timing of application.
- The Contractor shall keep a written logbook detailing all uses and pesticide applications carried out and a copy shall be submitted to Leeds City Council for record.
- The Contractor shall in accordance with COSHH Regulations protect employees and other persons, including the public, who may be exposed to substances hazardous to health.
- The Contractor shall dispose of waste pesticides and containers in accordance with the Control of Pesticides Regulations 1986, Control of Pollution Act 1974', and 'Water Act 1989'. Safe disposal arrangements shall be made before starting to apply pesticides.
- Concentrated pesticides shall be disposed of in arrangement with the local Environmental Health Department or with a specialist waste disposal Contractor.
- The Contractor shall be responsible for making good and or compensation for any damage resulting from negligence in the application, handling and storage of pesticides.
- The Contractor shall be responsible for keeping up to date with all legislation and regulations regarding the use of pesticides. The Contractor shall inform the Leeds City Council of any subsequent changes to legislation and regulations that affect the contract.

4.2 Hard Surfaces

- Herbicide: Apply a suitable foliar acting or residual herbicide. Allow recommended period for herbicide to take effect before clearing arisings.
- Remove litter, leaves, mud, silt and debris.
- Weeding: To all hard surfacing. Weed growth is deemed to include the removal of moss.
- The Contractor shall apply an approved pesticide to areas of weeds growing in paved or hard surfaced areas at the manufacturer's recommended rates. The purpose is to treat areas of hard surfaces where weeds have rooted and require a thorough drench in order to achieve a complete root kill.
- Drainage gullies: Empty traps and flush clean.
- Repairs to flexible bituminous pavings: In accordance with the original paving specification or BS 7370-2, clause 4.12.
- Stain removal: In accordance with BS 7370-2, table 4.
- General cleaning to be carried out with a mechanical sweeper, warm water and a mild detergent. Jet washers can be used on concrete surfacing but not on any block paving surfaces unless agreed in advance.

- All surfaces to be inspected for any movement or deterioration and defects reported to the management. (Item H3)
- All surfaces to be kept free of ice during winter months. Grit or non-sodium chloride based de-icer product to be used in maintenance.

4.3 Planting Maintenance

General conditions

- The works consist of all planted areas within the scheme, including lawns, trees, shrubs and perennial beds.
- It is believed that the works shall be maintained by Packaged Living from practical completion. It is assumed that the standard defects liability periods, as follows, will be taken up by the soft landscape works contractor:-
- Trees - 24 months from practical completion (PC)
  Perennial Shrubs— 12 months from PC
  Turf/Seed Areas — 12 months from PC
- All trees, shrubs, perennials and turf that fail shall be replaced in the next growing season covering a period up to five years.
- Use only machines and tools suitable for the site conditions and the work to be carried out. Use hand tools around trees, plants and in confined spaces where it is impracticable to use machinery.
- Good Practice - Where products are not fully specified they are to be suitable for the purposes of the works stated and in accordance with good horticultural practice, including the relevant provisions of current British Standard documents.
- Maintenance standards should at all times reflect the project's high quality status

Chemicals

- Refer to the Site Wide management elements
- Existing trees or vegetation damaged during site maintenance work shall be replaced by trees or plants of similar size and maturity or numbers considered reasonable by the local planning authority. The cost of the replacement shall be borne by the Contractor.
- The contractor will ensure that:-
  Adequate protection of existing and newly planted/turfed areas is erected and maintained to prevent damage.

  There is appropriate making good on removal of any protective measures on completion.

  There is repair of any damage to adjacent and existing site works and features.

  Arisings will be promptly removed from the site including of weeds, leaves, litter, rubbish, dirt and other arising's.

  Watering shall be undertaken as necessary to ensure that trees, grass and plants remain healthy, establish and grow. Watering for trees should be to BS 8545:2014. Should watering points not be available or emergency legislation restrict the use of water from the mains during drought conditions, the contractor shall arrange the collection and application of suitable second class water for irrigation purposes, by bowser or other means, from approved source to deliver to site and apply as specified. This shall be included for in the price for ongoing maintenance.

Tree, shrub, and grass planting

- Duration: Two full growing seasons from the date of planting.
- Weed control: Maintain weed free area around each tree and shrub.Diameter (minimum): The larger of 1 m or the surface of original planting pit.
- Keep planting beds clear of weeds as required. Planted areas: Fork over beds as necessary to keep soil loose, with gentle cambers and no hollows. Take care not to reduce depth or effect of mulch.
- Precautions: Ensure that trees and shrubs are not damaged by use of mowers, nylon filament rotary cutters and similar powered tools.
- Firming up: Gently firm loosened soil around trees/ shrubs. Straighten leaning trees/ shrubs.
- Trees: Spray crown when in leaf during warm weather.
- Timing: After dusk.
- Tree accessories: Check condition of stakes, ties, guys, guards and irrigation and ventilation systems.
- Broken or missing items: Replace.
- Loose stakes: Re-firm in the ground or replace as necessary to provide support to the tree.
- Loose guys: Re-firm anchor points and adjust as necessary to provide support to the tree.
- Ties: Adjust to accommodate growth and prevent constriction or abrasion.
- Damage to bark: Cut back neatly with sharp knife. Prevent further damage.
- Frequency of checks as required.
- Watering: Contractor's choice.
- Replacements: Any failures of planting to be replaced within the first two growing seasons to the same specification as the original proposals.

G Product Information
Data Sheets

Kinley
INSPIRED PLACES MADE POSSIBLE

AluExcel Landscape Edging

	Product Properties	AE18FM/RM	AE25FM/RM	AE40FM/RM	AE50FM/RM	AE65FM/RM	AE75FM/RM	AE100FM/RM	AE120FM/RM	AE150FM/RM	AE150EJFM/EJRM
Dimensions	Edging height	18mm	25mm	40mm	50mm	65mm	75mm	100mm	120mm	150mm	150mm
	Edging thickness (top bead)	5mm	5.5mm	6mm	6mm	6mm	6.5mm	6.5mm	7mm	8.5mm	8.5mm
	Edging length	2500mm	2500mm	2500mm	2500mm	2500mm	2500mm	2500mm	2500mm	2500mm	2500mm
	Edging foot width	30mm	45mm	45mm	45mm	45mm	70mm	70mm	70mm	70mm	70mm
	Fixing stake length	250mm	250mm	250mm	250mm	250mm	250mm	250mm	250mm	250mm	250mm
Costs[1]	Typical install rate (linear metre per hour)	40-45 metres	40-45 metres	35-40 metres	35-40 metres	35-40 metres	35-40 metres	35-40 metres	35-40 metres	35-40 metres	35-40 metres
	Typical supply & installation cost (£ per metre)	£6.50	£9.50	£12.00	£13.00	£13.50	£15.50	£18.50	£22.50	£26.50	£26.50
Other	Available finishes	Mill finish									
	Material specification	6005 T6 hardened aluminium									
	Recycled content	Part recycled / 100% recyclable									

Description

L-profile aluminium edge restraint for hard landscape surfaces available in either Flexible (FM) or Rigid (RM) lengths in various heights and thicknesses. Flexible lengths shown in the images above. Powder coat finishes available on request.

Applications

To edge or demarcate asphalt, rubber coating and other hard landscape surfaces. Suitable for parks, playgrounds and around building perimeters. AluExcel uses Aluminium Alloy 6005 T6 which is a high performance alloy with a high natural resistance to corrosive conditions in normal environments. It also has a higher resistance to heat than other aluminium alloys making it suitable for use with hot asphalt or tarmacadam surfacing up to 180°C.

Installation Information[1]

AE18FM/RM: By mounting on bitmac basecourse using proprietary masonry fixings.

All others: By mounting on compacted substrate (e.g. MOT Type 1) using 250mm steel Spiral Fixing Stakes. A bedding layer of dry mix 3:1 sharp sand / cement is recommended to ensure continual support of the edge restraint. When mounting on existing asphalt or concrete, use masonry nails or screw and plug fixings.

Lengths can be joined using a Strip Connector fitted onto the inside face of the product, except AE150EJFM/EJRM, where the Strip Connector is used on the rear of the product (in situations where the outside surface is higher than the inside surface, leaving the inside face visible).

Storage & Handling

The product is securely packed in a single flute cardboard carton to ensure no movement of the product in transit and each carton is sealed with a fibre tape. Depending on the size / weight of the consignment this may be palletised.

Whilst there is no specific weight restrictions on what is or is not safe to lift in manual handling, an assessment of the health and safety risks should be undertaken and measures taken to reduce the risk of injury so far as reasonably practicable.

Northpoint, Compass Park, Staplecross, E.Sussex TN32 5BS
t: +44 (0) 1580 830688
e: sales@kinley.co.uk
www.kinley.co.uk

Storage & Handling (continued)

The following guidelines may be useful:

a) Each person should be fully trained in manual handling techniques.

b) The use of handling aids such as a trolley, folk-lift, pallet truck or conveyor should be used if moving large volumes of cartons.

c) Break up large consignments into more manageable loads.

d) Ensure that the product is stored at a reasonable height, so avoiding the lifting of cartons from floor level or above shoulder height.

e) Reduce carrying distances of cartons.

Protective Equipment

We recommend that PPE (Personal Protective Equipment) is used when installing AluExcel:

a) Good strong safety boots/shoes to protect the feet.

b) Protective eyewear such as safety glasses.

c) Strong gloves to protect the hands.

d) If using loud cutting equipment then ear plugs or defenders should be worn.

First Aid

The Health and Safety Regulations 1981 require all construction sites to have the following:

a) A first aid box with enough equipment to cope with the number of workers on site.

b) An Appointed Person to take charge of first-aid arrangements. The Appointed Person looks after first aid equipment and facilities and calls the emergency services when required. Appointed Persons do not need first aid training.

c) A First-Aider who has undertaken training and holds an HSE approved qualification to administer first-aid. This means that they must hold a valid certificate of competence in either:

- First aid at work (FAW) issued by a training organisation approved by HSE
- Emergency first aid at work (EFAW) issued by a training organisation approved by HSE
- A recognised Awarding body of Ofqual/Scottish Qualifications Authority.

d) The number of first-aiders will depend on the site.

e) Information should be clearly displayed on site telling workers the name of the Appointed Person(s) or First Aider(s) and where to find them.

Fire Protection

AluExcel is made using Aluminium Alloy 6005 T6 which does not burn and is not a fire hazard.

Stability

Aluminium Alloy 6005A T6 grade alloy is a high performance alloy. It has a higher degree of strength, durability and resistance to heat than the less robust 6063 grade alloy.

All building materials are eventually degraded by weathering, corrosion, rot and decay. Aluminium's natural ability to resist these influences better than many materials is one of its most widely appreciated features. Aluminium reacts with the oxygen in the air to form an extremely thin layer of oxide; this layer is dense and provides excellent corrosion protection, and is self-repairing if damaged.

In its unprotected *'Mill Finish'* form aluminium is used very successfully for long-life everyday products making AluExcel exceptionally suitable for use as a commercial landscape edging system.

Environmental Issues

AluExcel is manufactured from recycled aluminium (80% recycled content minimum) and is 100% recyclable. As a result the whole life cost of aluminium edging is excellent as it is sold for recycling not paid disposal. The 20% virgin aluminium is blended with the recycled content to help achieve the proper chemical content for the alloy specification, which gives the specified mechanical properties for strength. Scrap aluminium is a valuable resource and can be recycled repeatedly.

There are plenty of raw materials for the production of aluminium. In a variety of forms, aluminium compounds make up a full 8% of the Earth's crust. Bauxite is the main starting point in the production of aluminium and given current rates of production there is enough bauxite to last another 200 to 400 years, this based upon no increases in the use of recycled aluminium and no further discoveries of bauxite. Furthermore the volume of aluminium being recycled is at a level where the requirement for virgin alumina is decreasing – further lessening the environmental impact.

Supporting Documents

More information on the AluExcel products can be found at www.kinley.co.uk in the Resource Centre. In particular, look for the CAD Drawings, Installation Guide (IG-AE-0116) and Edging Book (BR-EB-0116).

1. The *Costs* and *Installation Information* given in this document are intended as a guide only. We recommend that formal quotations and professional opinions are obtained before work is commissioned. Kinley Systems Ltd accepts no responsibility for any damage or loss as a result of using the *Installation Information*. We will be happy to engage in any discussion with regard to specific project applications.

Northpoint, Compass Park, Staplecross, E.Sussex TN32 5BS
t: +44 (0) 1580 830688
e: sales@kinley.co.uk
www.kinley.co.uk

Top Mounted Bench
Technical Datasheet

September 2021

An inset construction bespoke steel bench system that sits on top of the planter wall to create seating within the planting area. Suited to a wide range of planter designs using the Raaft Planter System with options for a back-support and arm-rests.

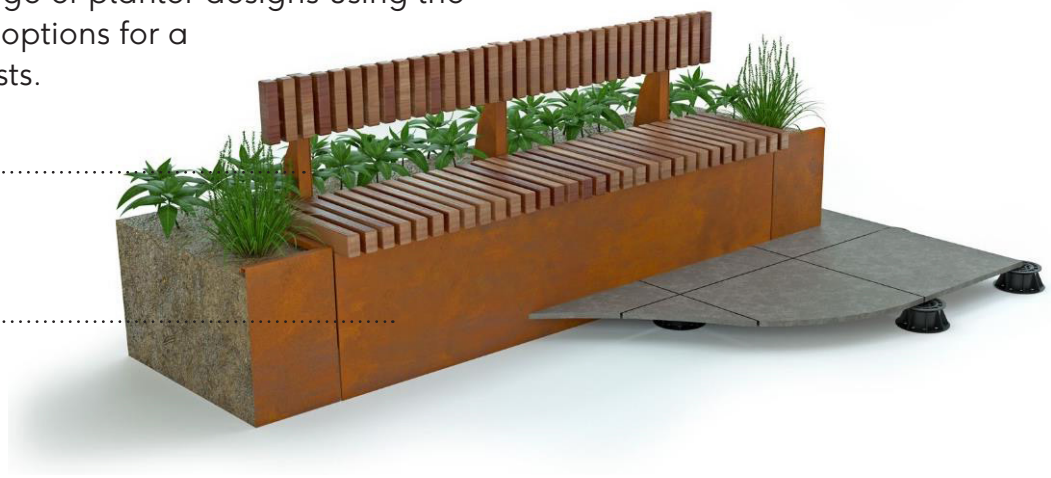

PRODUCT INFORMATION

Dimensions	Seat height (above FFL)	To suit design (450mm recommended)
	Seat depth	To suit design (460mm recommended)
	Seat length	To suit design
	Planter height (above FFL)	To suit design (400 – 600mm) Note: The planter height is restricted to the height of the underside of the bench
	Steel thickness	3mm
Other	Hardwood size	94 x 53 mm (Typical size)
	Material specification	CorTen A, Stainless Steel or Powder Coated
	Recycling	100% recyclable

APPLICATIONS

Designed to complement the Raaft Planter Systems, the benches are suitable for parks, playgrounds, roof terraces and many other external spaces. The Raaft Planter Systems have a high resistance to corrosive conditions in normal environments.

INSTALLATION INFORMATION[1]

Install within a Raaft Planter System. No welding is required. See the dedicated planter system installation guides for further information.

RAAFT

FIND OUT MORE OR REQUEST A SAMPLE
t: +44 (0)20 3146 7879 e: enquiries@raaft.co w: raaft.co
Raaft, 117-121 St John Street, Clerkenwell, London EC1V 4JA

© This technical document was written by Raaft, a group company of Kinley Systems Ltd. Northpoint, Compass Park, Staplecross, East Sussex, TN32 5BS. At the time of writing and publication of the sheet, all information is specified correctly. The company reserves the right to change the specifications of this product at any time without prior notice to third parties. Any photographs used in this sheet are intended only as illustrations. No rights can be derived from them.

Top Mounted Bench
Technical Datasheet

September 2021

STORAGE & HANDLING

The product is securely packed and sealed in clear plastic sleeving to ensure no movement of the product in transit. Depending on the size/weight of the consignment this may be palletised.

Whilst there is no specific weight restrictions on what is or is not safe to lift in manual handling, an assessment of the health and safety risks should be undertaken and measures taken to reduce the risk of injury so far as reasonably practicable.

The following guidelines may be useful:

a) Each person should be fully trained in manual handling techniques.

b) The use of handling aids such as a trolley, folk-lift, pallet truck or conveyor should be used if moving large volumes of cartons.

c) Break up large consignments into more manageable loads.

d) Ensure that the product is stored at a reasonable height, so avoiding the lifting of cartons from floor level or above shoulder height.

e) Reduce carrying distances of cartons.

PROTECTIVE EQUIPMENT

We recommend that PPE (Personal Protective Equipment) is used when installing a Raaft Bench:

a) Good strong safety boots/shoes to protect the feet.

b) Protective eyewear such as safety glasses.

c) Strong gloves to protect the hands.

d) If using loud cutting equipment then ear plugs or defenders should be worn.

FIRST AID

The Health and Safety Regulations 1981 require all construction sites to have the following:

a) A first aid box with enough equipment to cope with the number of workers on site.

b) An Appointed Person to take charge of first-aid arrangements. The Appointed Person looks after first aid equipment and facilities and calls the emergency services when required. Appointed Persons do not need first aid training.

c) A First-Aider who has undertaken training and holds an HSE approved qualification to administer first-aid. This means that they must hold a valid certificate of competence in either:

First aid at work (FAW) issued by a training organisation approved by HSE

Emergency first aid at work (EFAW) issued by a training organisation approved by HSE

A recognised Awarding body of Ofqual/Scottish Qualifications Authority.

d) The number of first-aiders will depend on the site.

e) Information should be clearly displayed on site telling workers the name of the Appointed Person(s) or First Aider(s) and where to find them.

FIRE PROTECTION

Raaft Benches are constructed with a framework of steel which does not burn, nor pose a fire hazard. The timber cladding would be subject to fire rating dependent on timber type and treatment.

STABILITY

CorTen A and Stainless Steel are high performance materials that display excellent resistance to atmospheric corrosion when compared to other steels, making them exceptionally suitable for bench applications.

CorTen A is a type of weathering steel which was developed to remove the need for regular painting and rust-prevention maintenance. This is achieved by the formation of a natural stable coating of dark brown oxidation across the metal's surface which acts as a barrier to the corrosive effects of rain, snow and other weather conditions.

Stainless Steel is an alloy principally containing iron, chromium, nickel and various other elements in small amounts. The addition of chromium provides the alloy with a high degree of corrosion resistance, removing the need for regular painting and rust-prevention maintenance.

POWDER COATING

Powder coating starts with shot-blasting of the steel which removes mill-scale, oxide dirt, oil and grease from the substrate; followed by a 7-stage zinc phosphate pre-treatment process for to prepare the surface. Zinc phosphate is used in the automotive industry and is therefore particularly suitable for products designed for exterior use. The product then receives the polyester powder coating to the requested colour. Polyester has excellent exterior durability and colour retention. Numerous colour options from world leading powder manufacturers are available. Powder coated products are carefully protected to avoid damage during transportation and installation.

An Anti-Graffiti finish is also available for powder coated surfaces. This is a clear top coat applied to weather resistant powder coating and provides a surface that allows easy cleaning of graffiti. More information on this is available upon request.

RAAFT

FIND OUT MORE OR REQUEST A SAMPLE
t: +44 (0)20 3146 7879 e: enquiries@raaft.co w: raaft.co
Raaft, 117-121 St John Street, Clerkenwell, London EC1V 4JA

© This technical document was written by Raaft, a group company of Kinley Systems Ltd. Northpoint, Compass Park, Staplecross, East Sussex, TN32 5BS. At the time of writing and publication of the sheet, all information is specified correctly. The company reserves the right to change the specifications of this product at any time without prior notice to third parties. Any photographs used in this sheet are intended only as illustrations. No rights can be derived from them.

Top Mounted Bench
Technical Datasheet

September 2021

ENVIRONMENTAL ISSUES

Raaft Planters are manufactured from either Steel, CorTen A or Stainless Steel and is 100% recyclable. As a result the whole life cost of steel is excellent as it is sold for recycling not paid disposal. The principal element used in the production of steel is iron, which is second only to aluminium in terms of natural abundance in the Earth's crust. At current extraction rates there is enough iron to last another 1000+ years.

SHEET MATERIAL TOLERANCES

a) CorTen A steel materials class A EN10029

b) This confirms a thickness tolerance for 3mm of lower -0.4 to upper +0.8

c) Sheet width tolerance for panels between 600 – 2000mm are + 20mm

d) Sheet length tolerance for panels up to 4000mm are +20mm

e) Flatness tolerance - the minimum yield strength of hot rolled CorTen A steel is 355 N/mm2 which makes it steel type L. A 2000mm length has a flatness tolerance for 3mm thickness material of 14mm.

LOADING ANALYSIS[2]

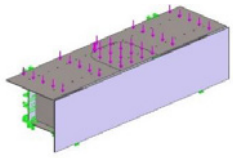

A loading analysis has been carried applying pressures to the bench unit and the conclusion reached was as follows:

The Raaft Inset Bench Assembly will safely support a distributed load of 1200kg or a point load in the centre of 825kg with a factor of safety of 1.5.

SUPPORTING DOCUMENTS

More information on the Raaft Bench systems can be found at www.raaft.co on the product page. In particular, look for theTechnical Support documents.

1. The Installation Information given in this document is intended as a guide only. We recommend that professional opinions are obtained before work is commissioned. Raaft, a Kinley Systems Ltd. Group Company. accepts no responsibility for any damage or loss as a result of using the Installation Information. We will be happy to engage in any discussion with regard to specific project applications.

2. Please note the loading analysis information is provided as a guide only. We recommend that professional opinions be obtained for construction projects prior to work being commissioned. Raaft Ltd.. accepts no responsibility for any damage or loss as a result of using the loading analysis. We will be happy to engage in any discussion with regards to specific project applications

The information in this document is subject to change due to continuous improvement in the reliability, functionality, design, or otherwise of the product. This document is owned by Raaft Ltd.

RAAFT

FIND OUT MORE OR REQUEST A SAMPLE
t: +44 (0)20 3146 7879 e: enquiries@raaft.co w: raaft.co
Raaft, 117-121 St John Street, Clerkenwell, London EC1V 4JA

© This technical document was written by Raaft, a group company of Kinley Systems Ltd. Northpoint, Compass Park, Staplecross, East Sussex, TN32 5BS. At the time of writing and publication of the sheet, all information is specified correctly. The company reserves the right to change the specifications of this product at any time without prior notice to third parties. Any photographs used in this sheet are intended only as illustrations. No rights can be derived from them.

Test Data Certificate

HARDSCAPE
Inspire. Select. Supply.

CE

Hardscape Products Ltd

21

BS EN 1338:2003 - Precast Concrete Paving Blocks
Uses: Internal and external flooring and / or roof covering

Commercial name: Kellen Breccia Magma
Place of manufacture: The Netherlands

Declared Performance

Characteristics	Value	Test standard
Reaction to Fire	A1	5.3.6.1
External Fire Performance	x	
Emission of asbestos	x	
Breaking strength	>3.6 Mpa	5.3.3.1
Slip / skid resistance	NPD (textured surface)	5.3.5.1 / 5.3.5.2
Thermal Conductivity	x	
Durabilty	Satisfactory	5.3.3.3 / 5.3.5.3

Products are offered in line with the requirements of Attestation Level 4 as designated under the Construction Products Regulations (2011) Annex V. Type testing, routine testing and Factory Production Control documents have been developed and issued for this series of products.

We Hereby declare that the products named above are in conformity with the essential requirements of the Construction Products Regulatons and the ZA Annex within the following standard when installed in accordance with the manufacturers installation guidelines.

BS EN 1338:2003

Signed:

Name: Alex Warren
Position: Operations Director

Ethical Trading Initiative
Respect for workers worldwide

CfA ISO 900 06/2335 CfA ISO 14001 16/4466

Federation Stone Great Britain

Hardscape North (Registered office) Eagley House, Deakins Business Park, Egerton, Bolton, Lancashire, BL7 9RP

Telephone 01204 565 500 **Email** enq@hardscape.co.uk

www.hardscape.co.uk

Marshalls
Creating Better Spaces

Landscape House, Premier Way,
Lowfields Business Park,
Elland HX5 9HT
Tel: 03704 11 22 33

T: 01422 312000
F: 01422 312943
E: grouptechnicalservices@marshalls.co.uk
W: www.marshalls.co.uk/commercial

255 x 205 x 450 Conservation X Kerb

Date Created: 13/04/21

Conservation X Kerb - Silver Grey

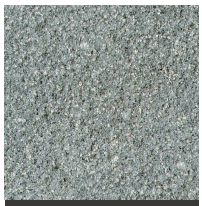

Conservation X Kerb - Charcoal

Conservation X Kerb - Cream

*Natural products are manufactured from aggregates sourced locally to the works and contain no pigmentation, therefore colour variation between products from different works is possible.

For a striking and modern kerb system, the **Conservation X Kerb** offers a slightly wider profile than a standard kerb, delivering modern design aesthetics in any application.

Marshalls' **Conservation X Kerb** is high in strength and precision-manufactured before going through a unique secondary texturing process, helping it achieve a granite-look finish. This product is manufactured in the UK with up to 48% recycled material content.

The beauty of our **Conservation X Kerb** is the wide range of supporting ancillaries, making it an all encompassing kerb system solution. It can be used in a whole host of projects, including pavements, pedestrian areas within busy urban spaces, car parks and much more.

Available in Charcoal, Silver Grey and our new Cream colour, these kerbs complement the Conservation X Block and Paving ranges perfectly. You can view our full Conservation X range here.

DESCRIPTION	
Appearance	Solid unit with textured surface
Manufacturing Process	Hydraulically pressed concrete
Base Raw Material	Concrete
Governing Manufacturing Standards	All data where relevant to be established in accordance with BS EN 1340 : 2003
Type	Solid unit with textured surface
CE Marking/DOP	https://www.marshalls.co.uk/dop
NBS Specification	Q10 112,Q10 10,Q10 510

Marshalls
Creating Better Spaces

Landscape House, Premier Way,
Lowfields Business Park,
Elland HX5 9HT
Tel: 03704 11 22 33

T: 01422 312000
F: 01422 312943
E: grouptechnicalservices@marshalls.co.uk
W: www.marshalls.co.uk/commercial

255 x 205 x 450 Conservation X Kerb

Date Created: 13/04/21

PHYSICAL PROPERTIES

Work Dimensions (mm)	255 x 205 x 450
Nominal Dimensions (mm)	255 x 205 x 450
Tolerances on Work Dimensions (mm)	Width ±3mm, height ±3mm, length ±3mm
Abrasion Resistance (mm)	≤ 23mm (Wide Wheel Abrasion Test)
Durability (Freeze-thaw)	≤ 1.0 kg/m² as a mean with no individual value > 1.5 kg/m²
Material Density	2300 kg/m³ (typically)
Slip/Skid Resistance (polished)	Mean polished skid resistance value (PSRV) : > 45
Slip/Skid Resistance (unpolished)	Mean unpolished skid resistance value (USRV) : > 45.
Thermal Conductivity (K value)	Design data as defined to BS EN 13369 : 2013
Transverse/FlexuralSplit/Breaking	Characteristic bending strength of 3.5 MPa with no individual result less than 2.8 MPa

SPECIFICATION

Approx unit weight (kg)	48
Emission of Asbestos	No content
External Fire Performance	Deemed to satisfy when used for roofing
Reaction to fire	Class A1 when used for internal flooring
Materials Control	CE Marked to BS EN 1340 : 2003 Concrete Kerbs

SUSTAINABILITY

Carbon Footprint	22 kg CO2 lin m

APPLICATION

Suitability	Laid in accordance with BS7533-6 : 2006

SUPPLY

Units Per Pack	20

FURTHER INFORMATION

Cleaning & Maintenance	Available on request
Efflorescence	Any product containing cement during its early life may exhibit a temporary white discolouration known as efflorescence. This is not a product fault and will gradually disappear with exposure to natural weathering and trafficking
Weathering	It should be appreciated that with all products weathering and site conditions can cause shade variation to appear across the surface of individual units. This does not in any way affect the performance of the units and any such variation will diminish over a period of time as the product matures.
Product Evolution	The evolution of new product design is continuous and information is subject to change without notice. Customers should check with the supplier to ensure that they have the latest details. Marshalls reserve the right to amend the technical information as deemed necessary and in accordance with the relevant national and international standards without notice
Contact Us	For technical information on the design, specification and construction when utilising the product, contact Group Technical Services on 0370 411 2233

Marshalls
Creating Better Spaces

Landscape House, Premier Way,
Lowfields Business Park,
Elland HX5 9HT
Tel: 03704 11 22 33

T: 01422 312000
F: 01422 312943
E: grouptechnicalservices@marshalls.co.uk
W: www.marshalls.co.uk/commercial

Neso Granite

Date Created: 19/01/22

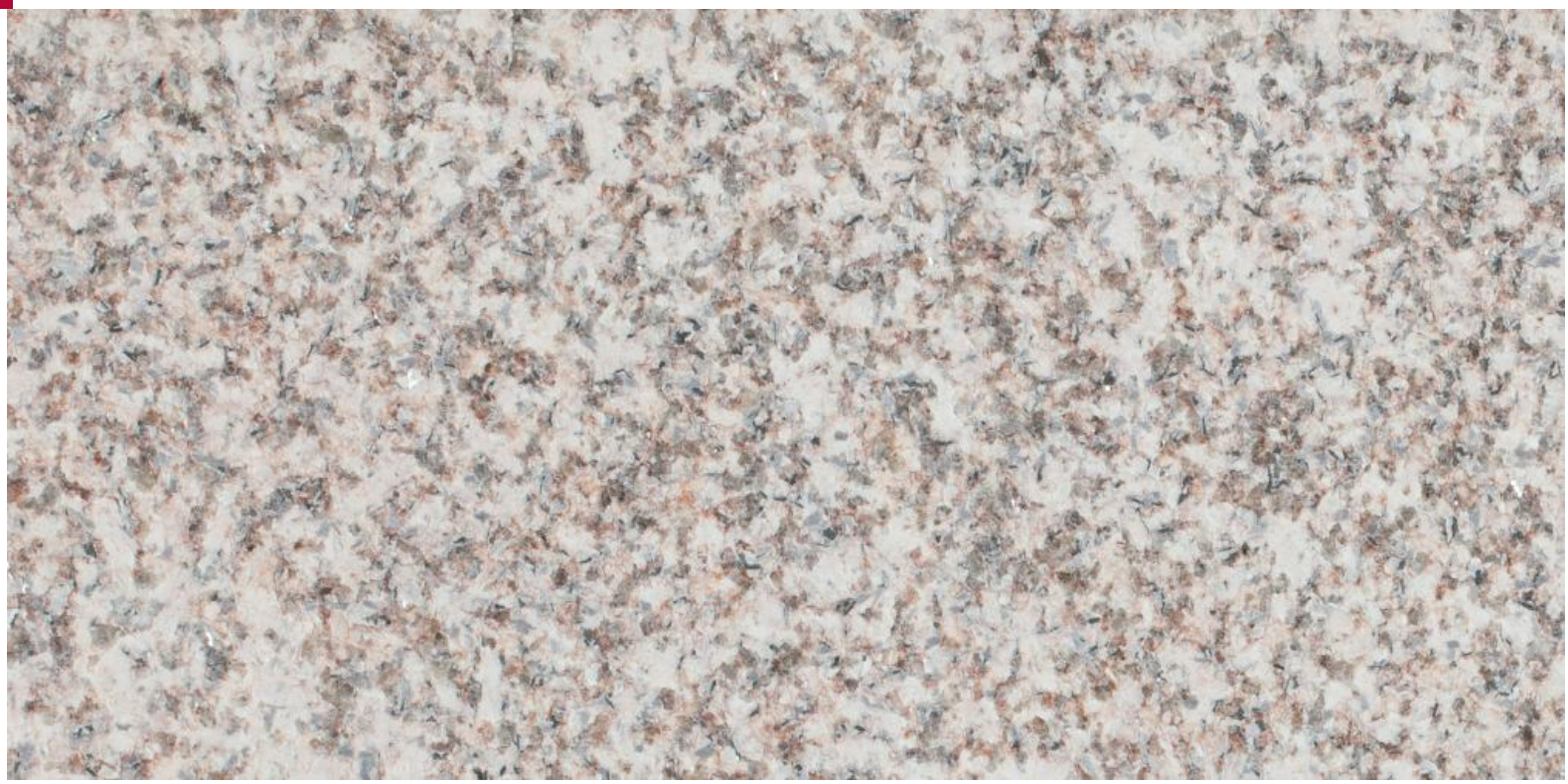

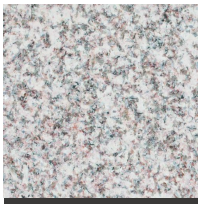
Neso - Flamed

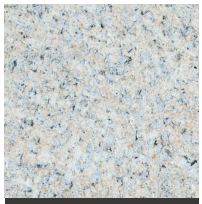
Neso - Blasted

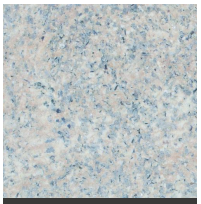
Neso - Honed

*It should be noted that colour variations and markings are characteristic of Natural Stone. Inherent variations cannot be controlled nor the precise shade of stone guaranteed.

Neso Granite is a strong, hard-wearing and durable stone, suitable for both pedestrian and trafficked spaces.

This buff granite is available in blasted, flamed or honed finishes depending on the slip resistance and aesthetic needs of the project.

A versatile stone, it can be used for products including paving, setts, kerbs and steps, water management and street furniture. Specialised and bespoke masonry items may be available on request.

All Marshalls granites are fully tested to the appropriate standards in the UK and where relevant UKCA marked in accordance with the latest legislation.

DESCRIPTION	
Appearance	Light beige with Grey Black and Orange inclusions
Manufacturing Process	Sawn
Geological Type	Granite
Quarry of Origin	Villa Real, Portugal
Governing Manufacturing Standards	All data where relevant to be established in accordance with BS EN 1341 : 2012, BS EN 1342 : 2012 & BS EN 1343 : 2012
Petrographical Description	White and pale grey with yellow to orange spots coarse Granite
UKCA Marking/DOP	https://www.marshalls.co.uk/declarations

Marshalls
Creating Better Spaces

Landscape House, Premier Way,
Lowfields Business Park,
Elland HX5 9HT
Tel: 03704 11 22 33

T: 01422 312000
F: 01422 312943
E: grouptechnicalservices@marshalls.co.uk
W: www.marshalls.co.uk/commercial

Neso Granite

Date Created: 19/01/22

PHYSICAL PROPERTIES

Work Dimensions (mm)	450 x 450 x 50 450 x 450 x 60 450 x 450 x 70 900 x 450 x 50 900 x 450 x 60 900 x 450 x 70 600 x 600 x 50 600 x 600 x 60 600 x 600 x 70 900 x 600 x 50 900 x 600 x 60 900 x 600 x 70 200 x 100 x 50 200 x 100 x 60 200 x 100 x 70 300 x 100 x 50 300 x 100 x 60 300 x 100 x 70 300 x 150 x 50 300 x 150 x 60 300 x 150 x 70 300 x 200 x 50 300 x 200 x 60 300 x 200 x 70
Abrasion Resistance (mm)	17.5mm (Mean value to EN 14157 : 2004 (Hev = 18.2mm))
Durability (Freeze-thaw)	11.4/10.3 MPa (Mean values to EN 12371 : 2006)
Material Density	2571 kg/m^3 (Mean value to EN 1936 : 2006)
Open Porosity (%)	0.93% (Mean value to EN 1936 : 2006)
Compressive Strength (MPa)	65 MPa (Mean value to EN 1926 : 2006 (Lev = 55.09 MPa))
Water Absorption (%)	1.14% (Mean value to EN 13755 : 2002 (Hev =1.54%))
Transverse/FlexuralSplit/Breaking	6.43 MPa (Mean value to EN 12372 : 2006 (Lev = 4.52 MPa))

TEXTURE SPECIFIC PROPERTIES

	Honed	Flamed	Blasted
Light Reflectance Value (LRV)	41.84	48.43	48.67
Surface Roughness (Rz-µm)	32	34	>75
Slip Resistance (BS 14231) (Dry)	72	94	98
Slip Resistance (BS 14231) (Wet)	52	72	72

MANUFACTURING

Materials Control	UKCA Marked to BS EN 1341 Paving

SUSTAINABILITY

ERI Score	Our Score: 4.2 Cluster Score: 3.6

FURTHER INFORMATION

Contact Us	For technical information on the design, specification and construction when utilising the product, contact Group Technical Services on 0370 411 2233

SILVA CELL 2 TECHNICAL SHEET

DeepRoot's Silva Cell 2 supports traffic loads while providing uncompacted soil volumes for large tree growth and on-site stormwater management. The modular framework provides unlimited access to healthy soil — a critical component of tree growth in urban environments — allowing them to manage stormwater, reduce heat-island effect, and improve air quality.

Silva Cells can be used to create underground bioretention systems; they are easily sized to absorb stormwater on-site through soil storage, interception, and evapotranspiration. Trees and soil also offer many water quality benefits, including removal of dissolved nutrients, hydrocarbons, and total suspended solids (TSS).

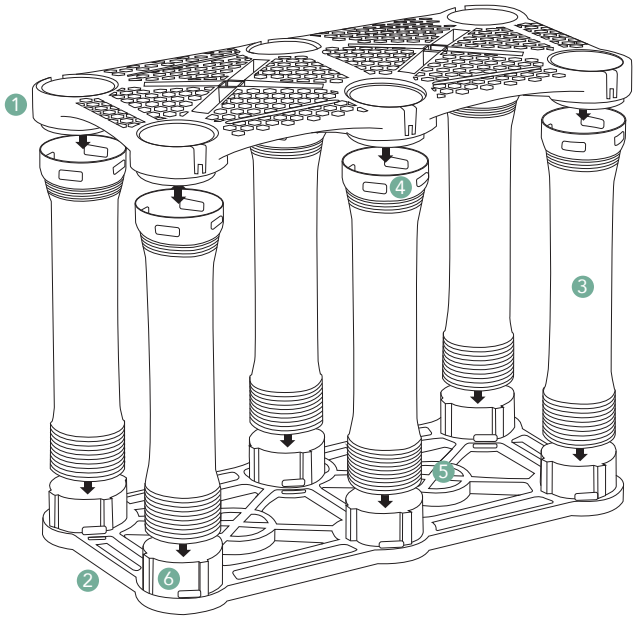

1. **Deck**
   The top piece of the assembly. The deck is permeable, with wide openings that allow water to easily pass through to soil below. High fit tolerance; removable and reusable.
2. **Base**
   The bottom portion of the Silva Cell 2 assembly.
3. **Post**
   The posts transfer paving loads vertically downward to a compacted sub-base. They are available in two sizes - 1x and 2x - that snap together to form 3x, the tallest.
4. **Secure Connections**
   Different post sizes snap together to form different heights based on the needs of your site.
5. **Footpad**
   Footpad offers a safe and convenient way to walk through the system during installation.
6. **Base Cup**
   Posts snap into base cups with a quarter turn.

1x Stack

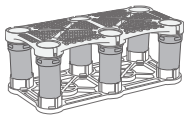

2x Stack

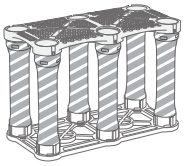

3x Stack

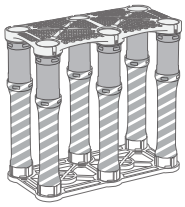

Loading: Supports vehicle loading equal to 32,000 lbs (14,500 kg) per axle, which allows use in areas that accommodate 3 - 4 axle vehicles such as those used for emergency, delivery, and maintenance. Generally meets AASHTO HS-20 (USA), CSA-S6, 87.5 and OBC 54KN (Canada), and BS EN 1991-1-1:2002 and BS EN 1991-1-2:2003 (UK) loading standards when used with standard paving profiles.

Utilities: 14" (355 mm) apertures easily accommodate new or existing utilities.

Stormwater in/out: Totally open interior allows for easy movement of water into and out of the system.

Installation: All parts snap or twist together; no additional pieces required.

Spacing: Up to 6" (152.4 mm) spacing delivers soil as efficiently as possible.

Structurally independent: Each stack stands alone; affected area of system easily isolated if utility (service) repairs are necessary.

MATERIAL SPECIFICATIONS & TESTING

Deck: fiberglass reinforced, chemically-coupled, impact modified polypropylene.

Post and base: homopolymer polypropylene.

Proof-load tested and FEA analysis completed at an independent facility. Contact us for a detailed engineering report.

BASE DIMENSIONS

Length: 48" (1219.2 mm)
Width: 24" (609.6 mm)

DECK DIMENSIONS

Length: 48" (1219.2 mm)
Width: 24" (609.6 mm)

SYSTEM HEIGHTS

1x: 16.7" (424 mm)
2x: 30.9" (784 mm)
3x: 43.0" (1092 mm)

SOIL CAPACITY

1x: approx. 15.27 ft^3 (0.430 m^3)
2x: approx. 28.21 ft^3 (0.795 m^3)
3x: approx. 39.28 ft^3 (1.107 m^3)

ASSEMBLED WEIGHTS

1x: 23.8 lbs (10.80 kg)
2x: 31 lbs (14.06 kg)
3x: 39.4 lbs (17.87 kg)

DeepRoot Green Infrastructure, LLC
Corporate Offices: 101 Montgomery Street, Suite 2850, San Francisco, CA 94104
800 ILV ROOT (458.7668) 800.277.7668 www.deeproot.com
© 2020 DeepRoot Green Infrastructure, LLC

deeproot®

Printed on 100% PCW Recycled Paper

Product Data Sheet

SureSet Permeable Paving

Typical Physical Properties

		Test Method
Density	1.75 Mg/m³	In-House testing procedure St002
Slip Resistance Value	48	BS 7976-2 : 2002 (4S rubber)
Permeability	30.21 l/m²/sec	BS EN ISO 11058 : 1999
Thermal Conductivity	0.706 W/mK	Guarded Hot Plate method BS EN 1946-2 : 1999
Freeze Thaw	Not affected	In-House testing procedure St004 (5 cycles)
Product Weight	25 Kg/m² at 16mm	In-House testing procedure St002

Typical Mechanical Properties

		Test Method
Compressive Strength	7.7 N/mm²	BS 6319-2 : 1983
Flexural Strength	1.4 N/mm²	BS 6319-3 : 1990
Modus of Elasticity in Flexure	0.2 GN/m²	BS 6319-3 : 1990

Typical Aggregate Properties

		Test Method
Aggregate Crushing Value	20 %	BS 812 - 110
Aggregate Abrasion Value	3.3 %	BS 812 - 113
Aggregate Impact Value	16 %	BS 812 - 112

Typical Resin Film Properties

Non-Volatile Content	100%
Shore Hardness	66 D
Tensile Strength	30 MPa
Elongation at Break %	30
Tear Strength	38 kN/metre

The information in the product data sheet is of general nature and whilst every effort is taken to ensure its accuracy customers should satisfy themselves that the material will be suitable for their specific requirements. Product design and specification are subject to change without further notice.

SureSet UK Ltd, Unit 32 Deverill Road Trading Estate, Sutton Veny, Warminster, Wiltshire, BA12 7BZ
01985 841180 mail@sureset.co.uk www.sureset.co.uk

Beehive Mill
Jersey Street
Manchester
M4 6JG

Tower Works
Globe Road
Leeds
LS11 5QG

T 0161 397 4953
T 0113 2454695
E info@re-formlandscape.com

www.re-formlandscape.com

re-form
landscape architecture