KITCHEN EXTRACT

ESP RANGE

1500 | 3000 | 4500 | 6000

purifiedair®

COMMERCIAL KICTHEN FILTRATION EXPERTS

Purified Air Ltd. has been manufacturing and servicing market-leading technology to filter and control oil, smoke, fat and odour produced by commercial kitchens and residential installation and service since 1984.

CONTENTS

02 TECHNICAL OVERVIEW

Key Features 02
ESP Technology 03
How It Works 04
Benefits of ESP 05
Technical Specification 06

08 ABOUT US

An Overview
Our Coverage

09 GET IN TOUCH

Contact Details

KITCHEN EXTRACT

ESP RANGE

1500 | 3000 | 4500 | 6000

Our ESP's have been specifically designed for kitchen extract systems; they have integral sumps to collect the oil, grease and smoke particles filtered out of the exhaust.

This not only simplifies servicing but eradicates potentially dangerous spillage from the bottom of the units and greatly cuts down on build-ups of grease within the ducting.

The ionisation voltage has been designed to run at a negative potential which enhances the ionisation of particles and also produces more ozone which is helpful in reducing cooking odours.

KEY FEATURES

- Eliminates up to 98% of oil, grease and smoke particles
- Filters particles down to sub-micron levels
- Produces Ozone to help reduce malodours
- Designed with an integral sump
- Modular in design
- Specifically designed for commercial kitchen application
- Energy efficient: - uses no more than 50W
- Greatly reduces grease build-up within the duct run
- IP65 rated for outside location

FILTERS REMOVE

Smoke | Steam | Oil | Grease

HOW IT WORKS

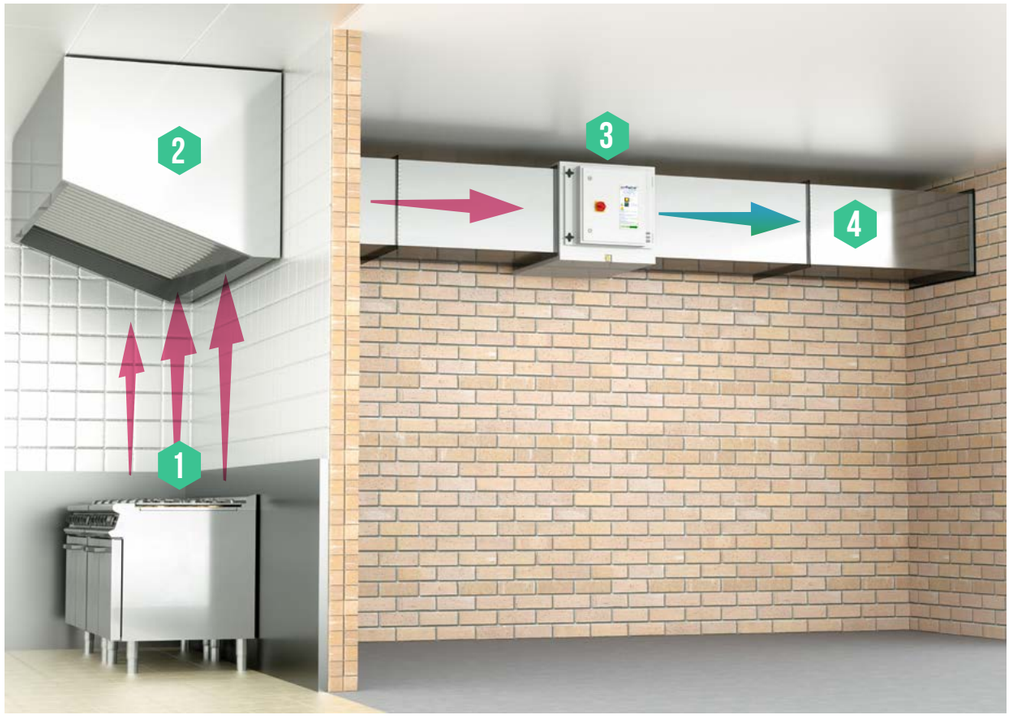

Our ESP units fit in-line with the kitchen ducting and can be configured modularly to cope with all extract volume requirements.

01 Cooking particulates and odours

02 Canopy Grease Filter

03 ESP - Particulate Control Unit

04 Airflow

OUR SERVICES

Design

Manufacture

Maintain

THE ELECTROSTATIC PROCESS

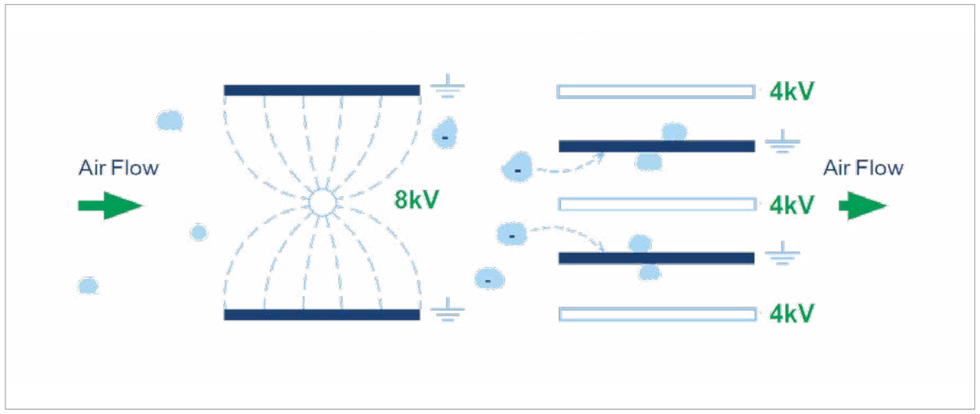

The above diagram shows, in a basic visual, how an electrostatic precipitator works. As air passes into the combined ioniser / collector cell, the particulates in the air stream are polarised. As they continue through the ioniser and between the collector cell plates, the polarised particulates are repelled away from the positively charged plates and attracted to the earthed plates where they stick and so are filtered out of the air flow.

THE BENEFITS OF ELECTROSTATIC TECHNOLOGY

- Eliminates up to 99% of particles
- Filters particles down to sub-micron levels
- Modular design
- Energy efficient

TECHNICAL SPECIFICATION

	ESP 1500	ESP 3000	ESP 4500	ESP 6000
Supply	220-240 V 50HZ	220-240 V 50HZ	220-240 V 50HZ	220-240 V 50HZ
Power Consumption	20 W	30 W	40 W	50 W
Maximum Airflow	0.7 M³/SEC (UP TO)	1.4 M³/SEC (UP TO)	2.1 M³/SEC (UP TO)	2.8 M³/SEC (UP TO)
Dimensions (mm)	W 450 H 630 D 640	W 900 H 630 D 640	W 1350 H 630 D 640	W 1800 H 630 D 640
Weight	55 KG	85 KG	118 KG	153 KG

DRAWINGS

ESP 1500

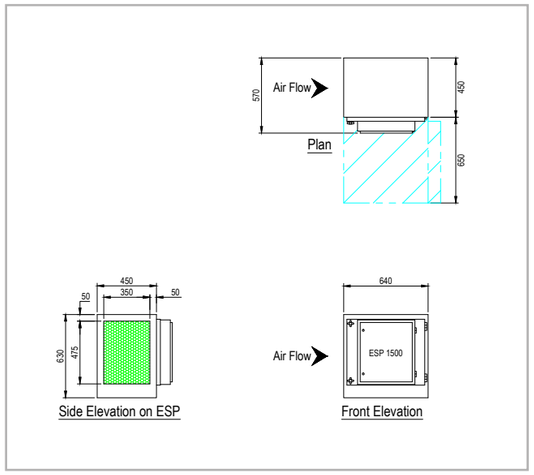

ESP 3000

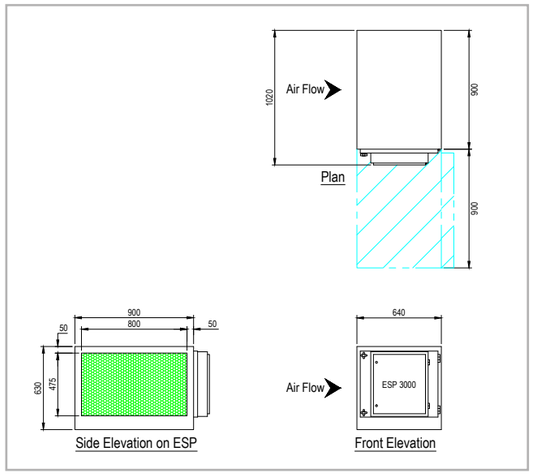

ESP 4500

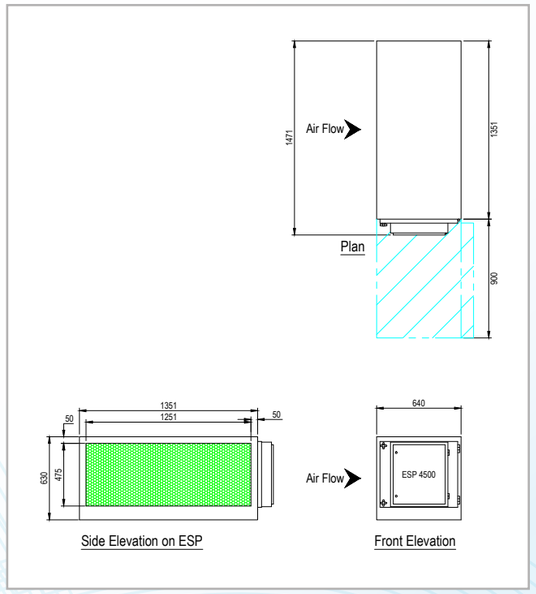

ESP 6000

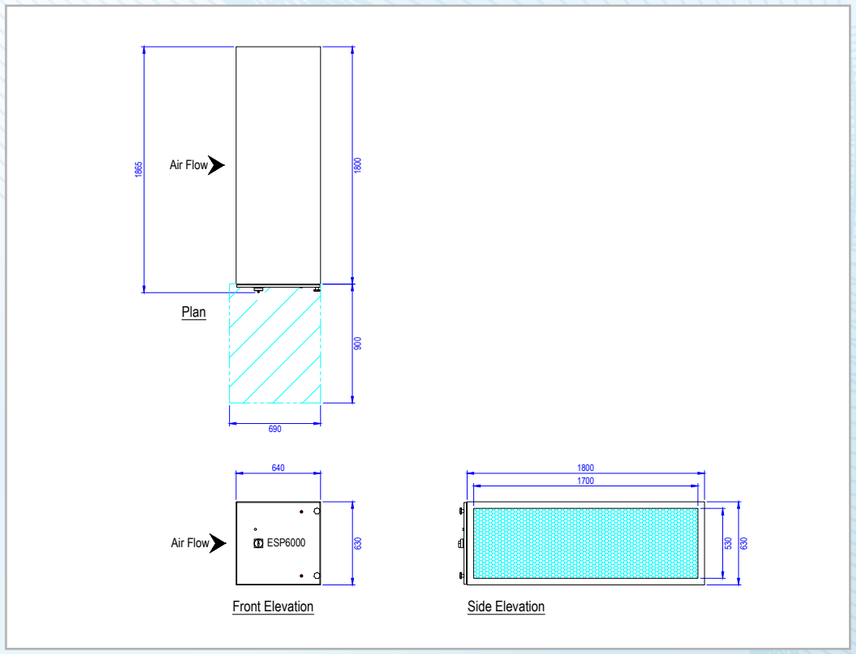

ABOUT US

Purified Air Ltd. has been striving to find the best and most cost-effective way to filter and control oil, smoke, fat and odour produced by commercial kitchens and residential installation and service since 1984.

Purified Air manufactures filtration and odour control products for stock and bespoke systems, supplying systems to many sectoral brands. The design of each solution is based on the type of food cooked, the cooking process used, and the extracted air volume providing tried and tested purified kitchen exhaust air for Fast Food, Casual Dining and Luxury Concept Restaurant (Fine Dining) markets. By working with these variables, we can design and supply some of the world's best commercial kitchen filtration and odour control systems.

WORLDWIDE COVERAGE

- United Kingdom
- Middle East
- Europe

UK MANUFACTURER

38 YEARS EXPERIENCE SINCE 1984

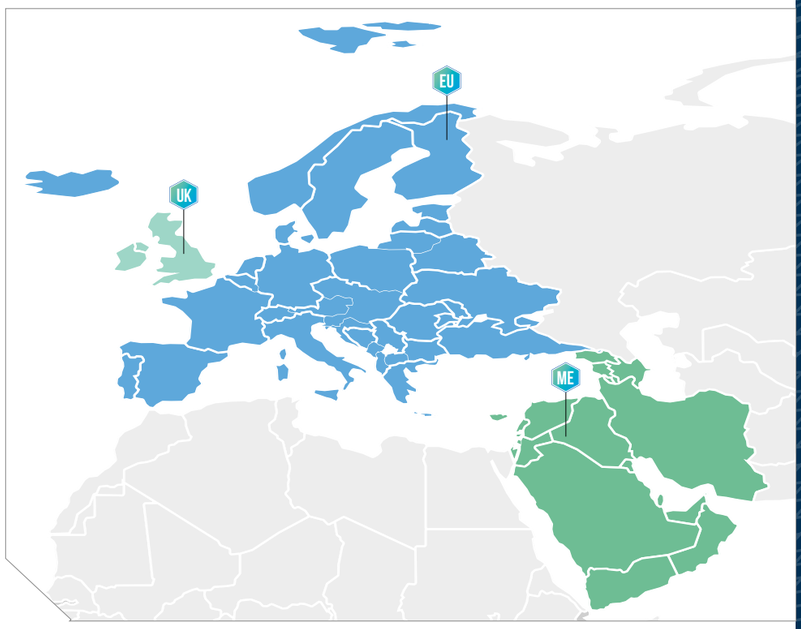

GET IN TOUCH

0800 018 4000

enq@purifiedair.com

Purified Air Limited, Lyon House
Lyon Road, Romford,
Essex RM1 2BG

purifiedair.com

purifiedair®

purifiedair.com