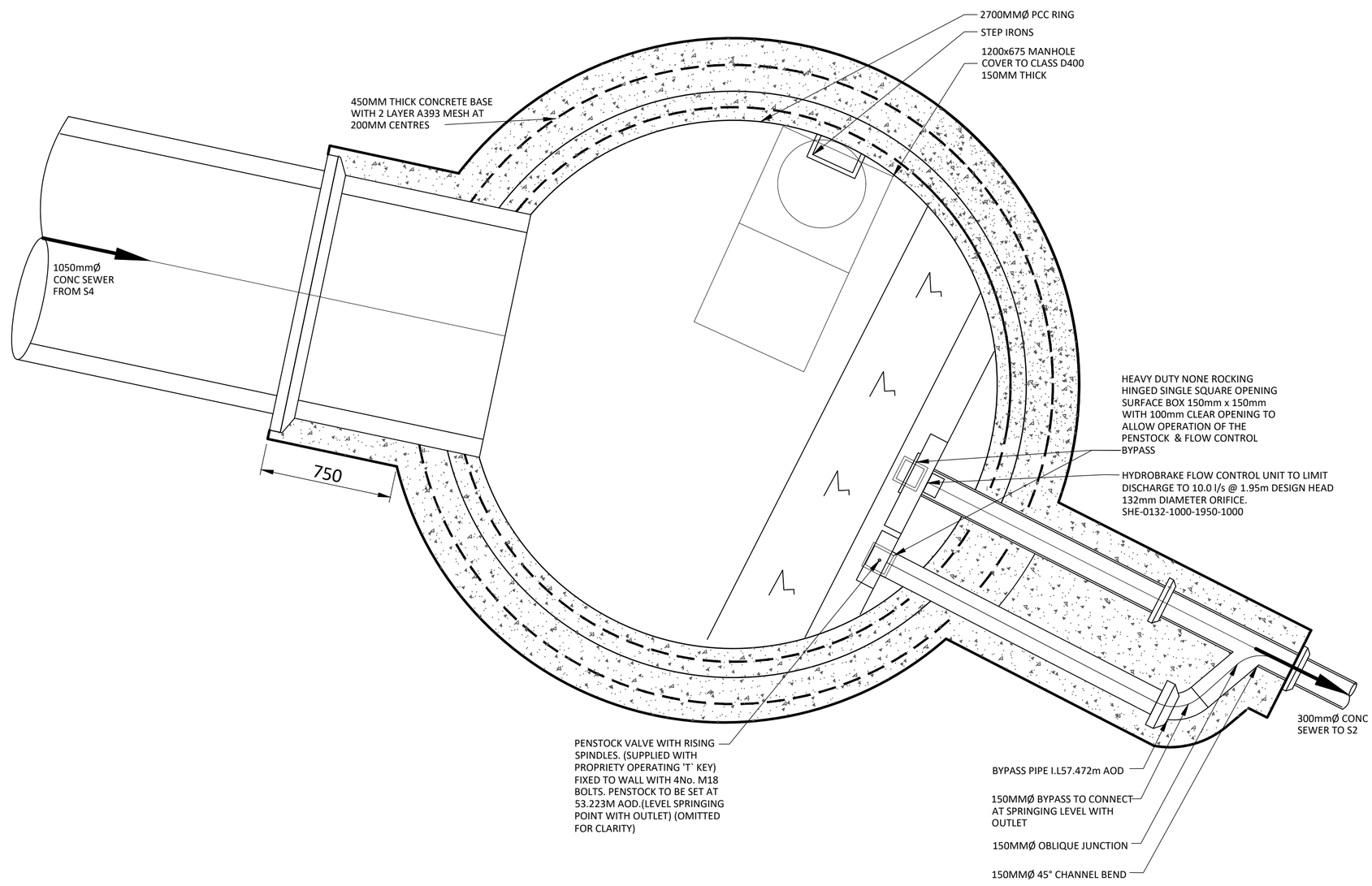

SW NETWORK MARSTON ST. PLAN S3

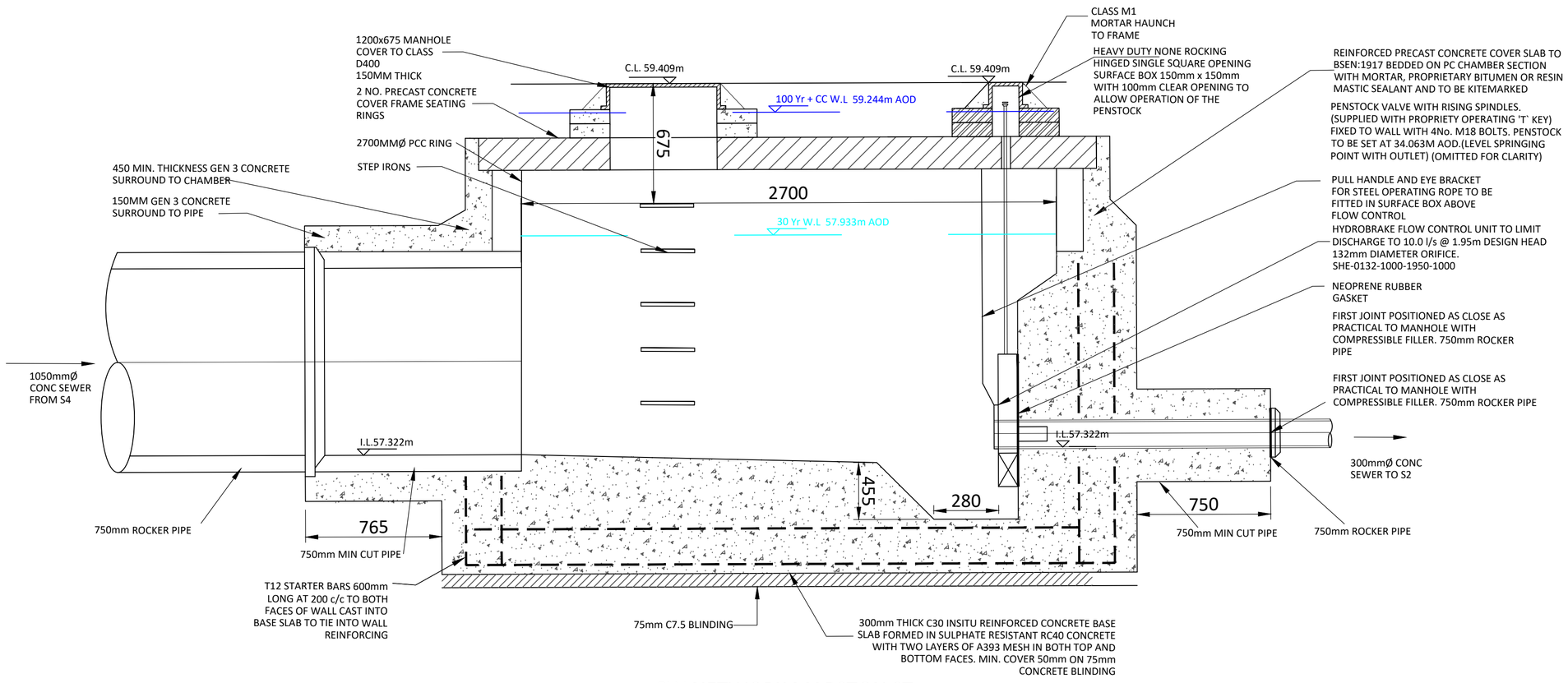

SW NETWORK MARSTON ST SECTION S3

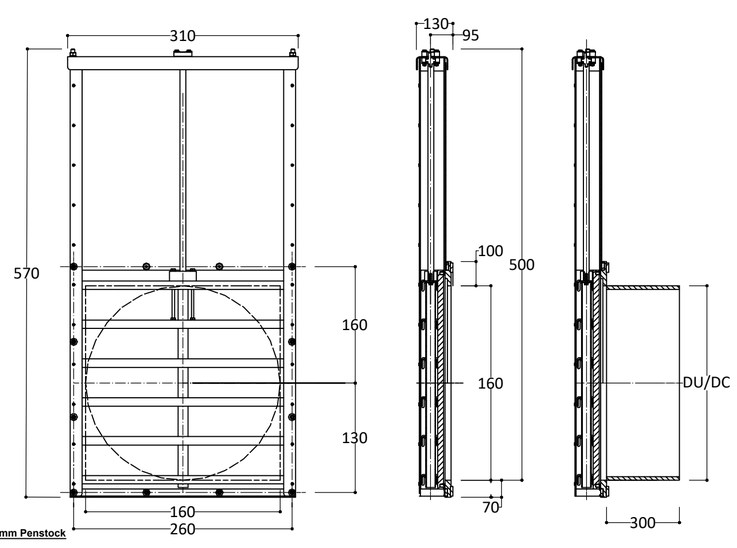

Althon KSA-MD 150mm Penstock

Manufactured by: KWT Waterbeheersing
Materials: HDPE, SS316, EPDM and POM
Standard Culvert: Ø 160mm
Working Pressure: 5 MwC on/off seating
The penstock is supplied with a non-rising spindle as standard. It has an OLG spindle bearing and an HDPE back plate.It has an HDPE moving plate provided with RVS316L stiffeners with a POM spindle block. The mounting material and the spindle are made of SS316. The seal between the moving and back plate consists of an integral EPDM lip seal, which does not require any adjusment after installaiton.

PLEASE NOTE THIS DRAWING IS NOT TO SCALE AND SHOULD ONLY BE USED AS A VISUAL REPRESENTATION

All dimensions shown in mm.

Standard Notes

1. This drawing is to be read in conjunction with all relevant Architect's and Engineer's drawings and the specification.
2. This drawing should not be scaled.
3. All dimensions are to be verified by the contractor on site.

Notes and Keys

Date	Rev	Description	Drawn	Chk
18.08.21	P01	ISSUED FOR INFORMATION	TC	PM

Project
COLLYHURST HOUSING
MANCHESTER

Title
S104 FLOW CONTROL MH DETAILS
SW NETWORK MARSTON STREET

Project Number	Scale @ A1	Date Created	Drawn	Checked	Suitability
1226-01	1:20	21.07.21	TC	PM	S4

Civic Engineers
MANCHESTER Carver's Warehouse, 77 Dale Street, Manchester, M1 2HG. Tel: 0161 228 6757
LONDON Reeds Wharf, 33 Mill Street, London SE1 2AX. Tel: 020 7253 2977
LEEDS Tower Works, Unit 02-01, Globe Road, Leeds, LS11 5QG. Tel: 0113 2025 130
GLASGOW Gresham Chambers, 45 West Nile St, Glasgow, G1 2PT. Tel: 0141 370 1829
www.civicengineers.com

Status
INFORMATION

Drawing Number
1226-01-CIV-XX-VIL-DR-DE-567

Revision
P01

© CIVIC ENGINEERS LIMITED