pod POINT

Fast Charging

Solo 3 - Freestanding Mount

Datasheet

Solo 3 - Freestanding Mount

The Freestanding Mount for the Solo 3 allows one or two Solo 3 chargers (either socketed or tethered) to be securely installed in locations where wall mounting is not suitable. The electrical supply cable for the Solo 3 is fed through the base of the mount and up through the core of the stand. The Freestanding Mount shown below - is available in double and single options, both of which include a base plate.

Part number (s)	Single: PP-A-210051-1 Double: PP-A-210220-1
Product family	Solo

Freestanding Mount

Single and double option

3 Year Warranty

Physical Properties

Height Width Depth	1400mm 298mm 200mm
Weight	Single - 11 kg Double - 12 kg

Standard colours	Black Powdercoat (RAL 9005), Smooth Matte Finish
Materials	Galvanised Steel

Installation

Wiring	Fed through base
Mount points	There are 4 mounting points available at the base of the mount.

Solo 3 - Freestanding Mount

Single Freestanding Mount - Mounts one Solo 3 charger.

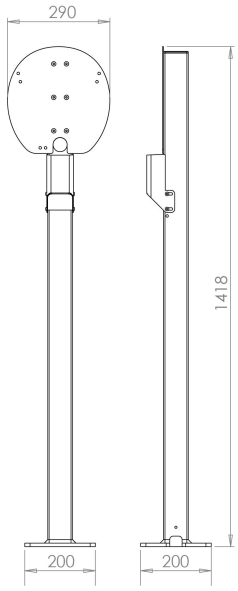

Front / Side view

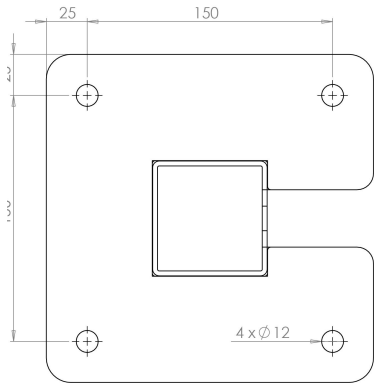

Base plate

Double Freestanding Mount - Mounts two Solo 3 chargers.

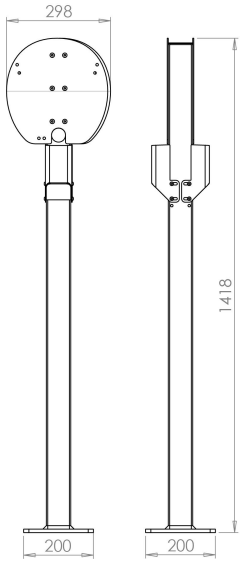

Front / Side view

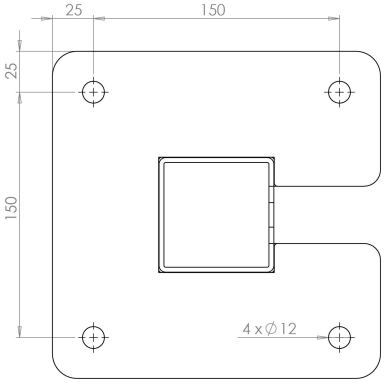

Base plate

Solo 3 - Freestanding Mount

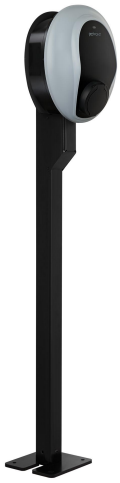

Call us for support on **020 7247 4114**

Email us at **support@pod-point.com**

Tweet us at **@Pod_Point**

Website: **pod-point.com**

pod POINT