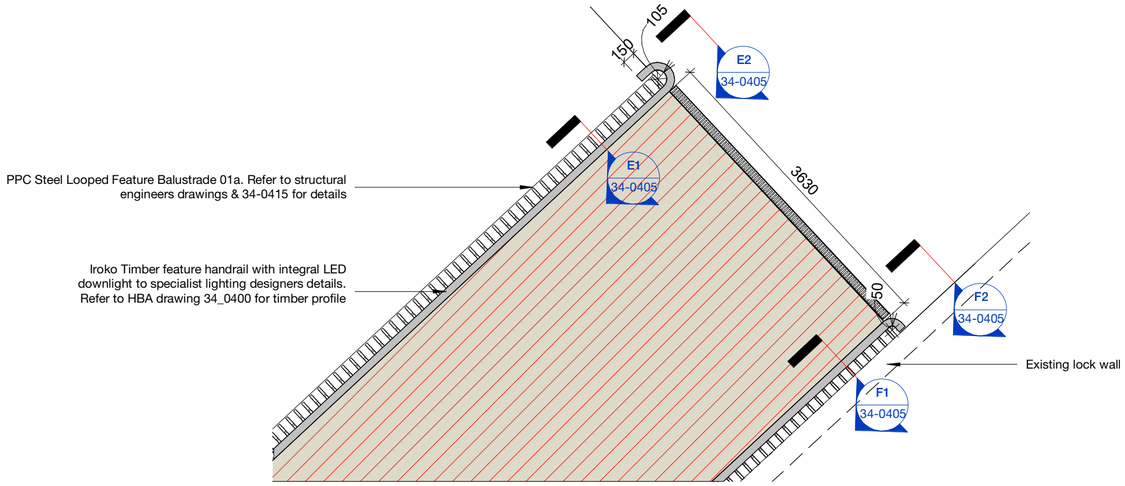

1 Northeast Handrail Ends

1 : 50

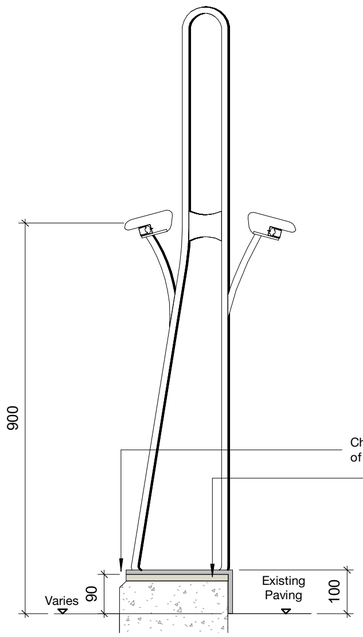

E1 Handrail E Section

1 : 10

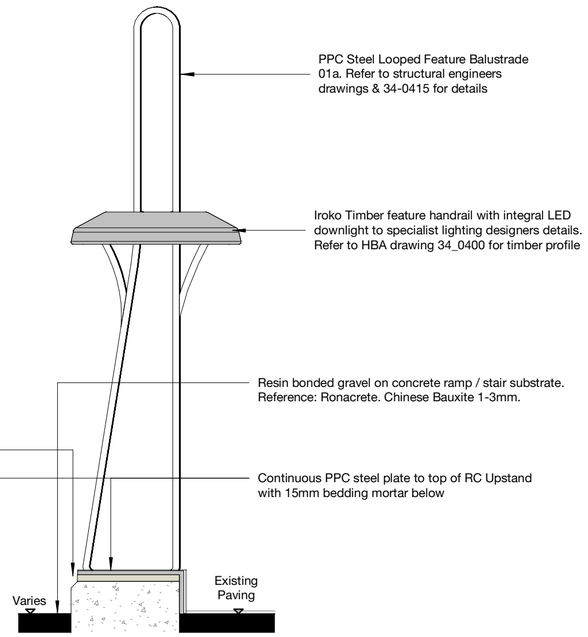

E2 Handrail E Elevation

1 : 10

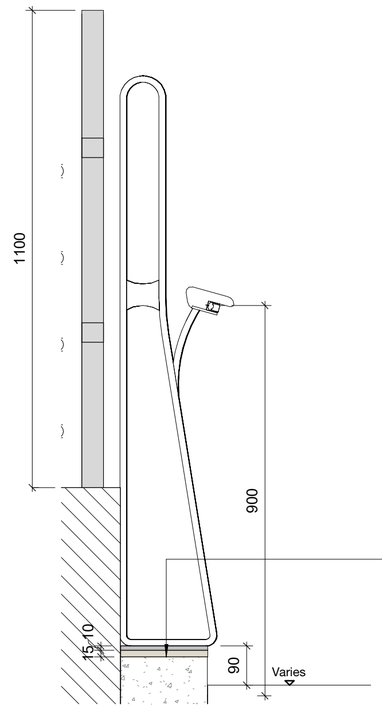

F2 Handrail F Section

1 : 10

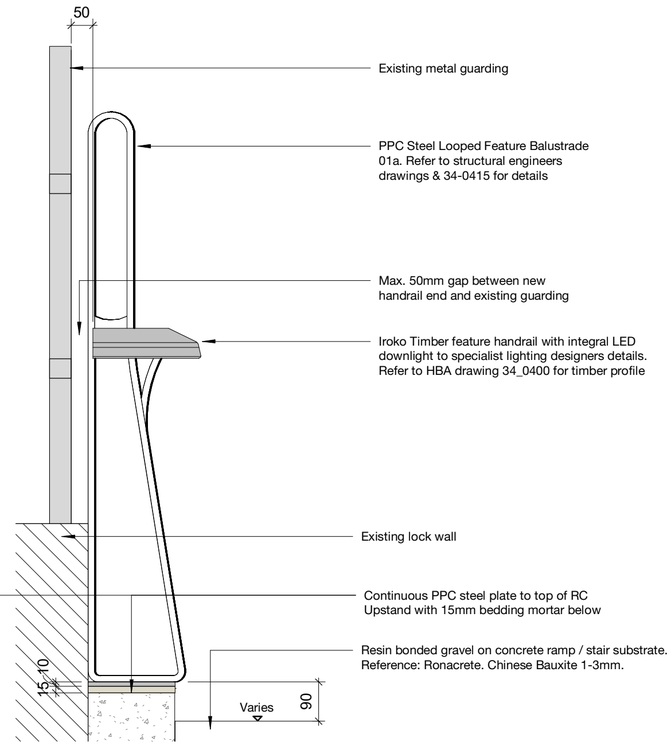

F1 Handrail F Elevation

1 : 10

Rev	Description	Date
P1	Initial Issue	30/09/22
P2	General Revision	14/10/22
P3	Issued for Stage 4 - Tender	21/10/22

Copyright Hawkins\Brown Architects

No implied licence exists. This drawing should not be used to calculate areas for the purposes of valuation. Do not scale this drawing. All Dimensions to be checked on the site by the contractor and such dimensions to be their responsibility. All work must comply with relevant British Standards and Building Regulations requirements. Drawing errors and omissions to be reported to the architect. To be read in conjunction with Architect's specification and other consultant information.

Scale	Date	Job Number	Project
As indicated @ A2	09/30/22	210131	Islington Cycle Bridge Lock No.3 Ashton Canal Manchester
Drawn By: LW	Checked By: JK	Status: S2	
Drawing No.: ICB-HBA-00-00-DR-A-34-0405	Rev: P3	Purpose of Issue: For information	Drawing: Handrail Detail - Feature Balustrade to existing lock wall

3C Tariff Street
Manchester M1 2FF
mail@hawkinsbrown.com
hawkinsbrown.com

Hawkins\Brown