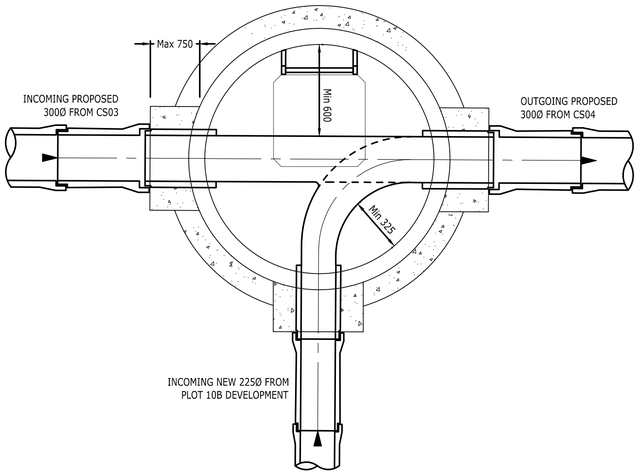

MANHOLE CS04

SCALE 1:20

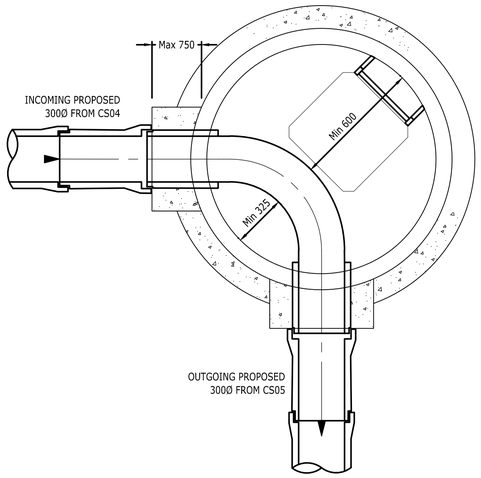

MANHOLE CS05

SCALE 1:20

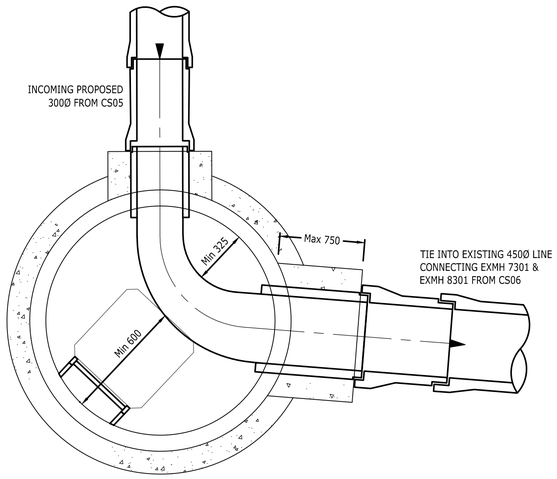

MANHOLE CS06

SCALE 1:20

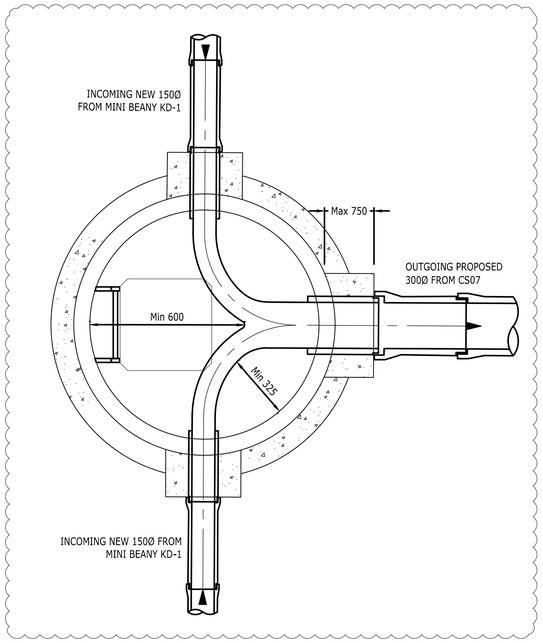

MANHOLE CS07

SCALE 1:20

COPYRIGHT RAMBOLL UK LIMITED. ALL RIGHTS RESERVED. THIS DOCUMENT IS ISSUED FOR THE PARTY WHO COMMISSIONED IT AND FOR THE SPECIFIC PURPOSES CONNECTED WITH THE PROJECT ONLY. IT SHOULD NOT BE RELIED UPON BY ANY OTHER PARTY OR USED FOR ANY OTHER PURPOSE. RAMBOLL ACCEPTS NO RESPONSIBILITY OR LIABILITY WHICH MAY ARISE FROM RELIANCE OR USE OF THIS DOCUMENT OR THE DATA CONTAINED HEREIN BY ANY OTHER PARTY OR FOR ANY OTHER PURPOSE.

Notes

1. ALL DIMENSIONS ARE MILLIMETRES U.N.O.
2. ALL LEVELS ARE IN METRES ABOVE ORDNANCE DATUM U.N.O.
3. THIS DRAWING IS TO BE READ IN CONJUNCTION WITH ALL RELEVANT ARCHITECTS AND ENGINEERS DRAWINGS AND SPECIFICATIONS.
4. ANY DISCREPANCIES IN DIMENSIONS OR DETAILS ON OR BETWEEN DRAWINGS SHOULD BE DRAWN TO THE ATTENTION OF THE ENGINEER FOR CLARIFICATION.
5. THIS DRAWING HAS BEEN DEVELOPED USING INFORMATION PROVIDED TO RAMBOLL BY A NUMBER OF THIRD PARTIES. RAMBOLL CAN ACCEPT NO RESPONSIBILITY FOR THE ACCURACY OF THE INFORMATION SHOWN OR THIRD PARTY INFORMATION.
6. MANHOLES TO BE PRECAST CONCRETE RINGS IN ACCORDANCE WITH BS 5911-3 AND BS EN 1917, KITEMARKED, AGREMENT CERTIFIED OR CE MARKED U.N.O.
7. ALL COMBINED DRAINAGE TO BE PVCu SOLID WALL TYPE B TO BS EN 13476-1 AND -3, KITEMARKED, AGREMENT CERTIFIED OR CE MARKED U.N.O.
8. ALL SURFACE WATER PIPES TO BE STRUCTURED WALL HDPE TO BS EN 13476-1 AND -3, KITEMARKED, AGREMENT CERTIFIED OR CE MARKED U.N.O.
9. ALL DRAINAGE WORKS TO BE CARRIED OUT IN ACCORDANCE WITH SEWERAGE SECTOR GUIDANCE AND RELEVANT UTILITY COMPANIES STANDARD AND HEALTH AND SAFETY POLICES
10. ANY DISCREPANCIES IN DIMENSIONS OR DETAILS ON OR BETWEEN DRAWINGS SHOULD BE DRAWN TO THE ATTENTION OF THE ENGINEER FOR CLARIFICATION
11. CONCRETE FOR GENERAL DRAINAGE WORKS TO BE GEN3 TO BS 8500-1, BS EN 206-1 AND ENGINEERS SPECIFICATION
12. PIPES ARE NOT DESIGNED FOR CONSTRUCTION TRAFFIC, CONTRACTOR WILL TAKE NECESSARY PRECAUTIONS TO PROTECT PIPES DURING CONSTRUCTION
13. REFER TO SEWER ABANDONMENT GENERAL ARRANGEMENT ON DRAWING RAM-XX-XX-DR-C-10010
14. REFER TO SEWER DIVERSION GENERAL ARRANGEMENT ON DRAWING RAM-XX-XX-DR-C-10100
13. REFER TO SEWER DIVERSION LONG SECTIONS ON DRAWING SERIES RAM-XX-XX-DR-C-10250
14. REFER TO UNITED UTILITIES DEVELOPER SERVICES CONSTRUCTION DETAILS AND DRAWING SERIES RAM-XX-XX-DR-C-10400 FOR STANDARD DETAILS DRAWINGS

Rev	Description	Date	By / Chk	App
P03	ISSUED FOR COMMENT	13/01 2023	CO / SP	NM
P02	ISSUED FOR COMMENT	21/12 2022	CO / SP	NM
P01	ISSUED FOR COMMENT	02/11 2022	CO / SP	NM

PRELIMINARY

PLOT 10A
FIRST STREET
MANCHESTER

RAMBOLL

tel 01244 311855 chester@ramboll.co.uk
www.ramboll.co.uk

PROPOSED SEWER DIVERSION SCHEDULES & PLAN SECTIONS SHEET 2

Project No:	Scale (@A1):	Drawn:	Date:
1620007819	AS SHOWN	CO	10/2022

Drawing No:	Rev:
RAM-XX-XX-DR-C-10201	P03

11/01/2023 15:40:57