DO NOT SCALE

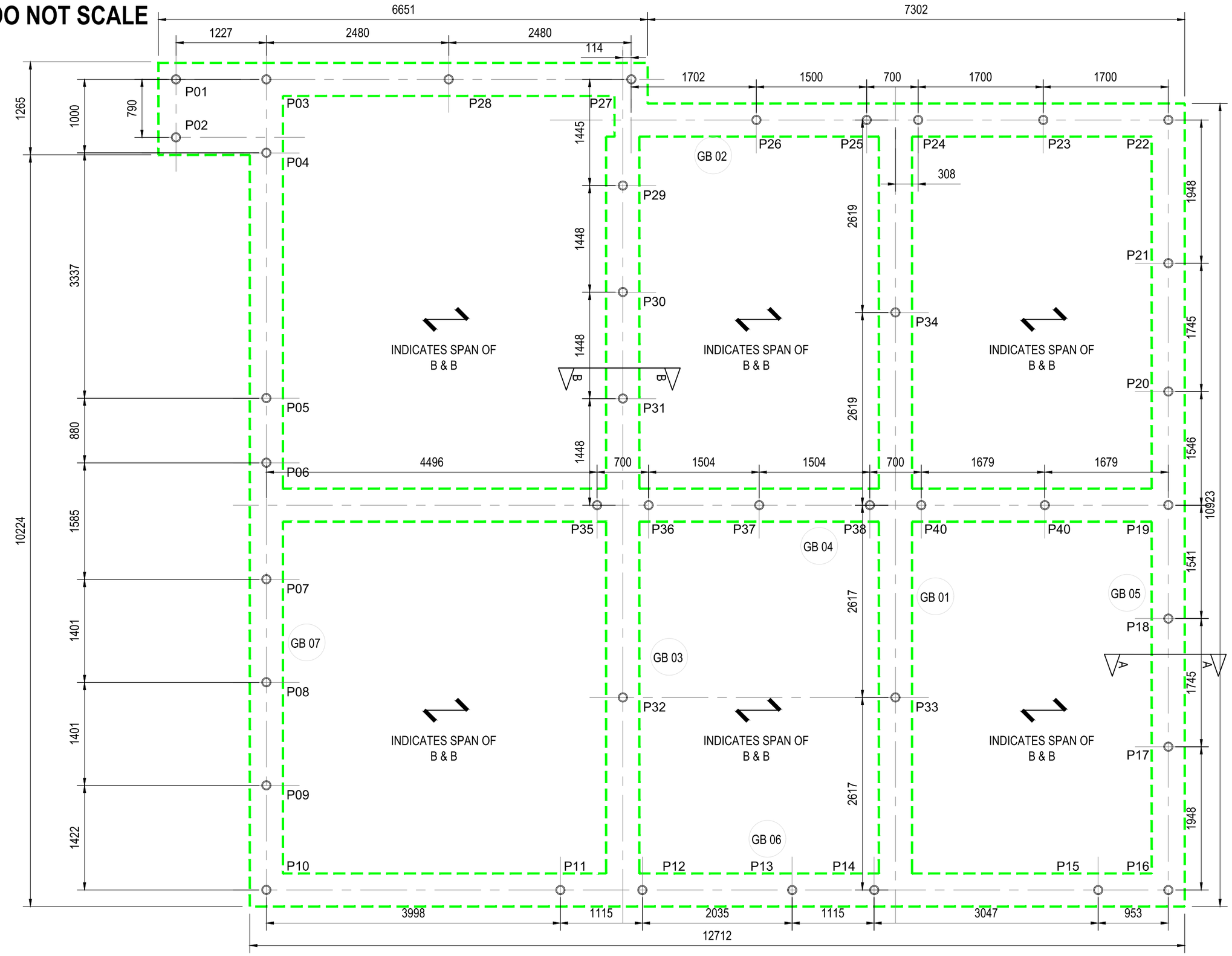

GROUND BEAM & PILE LAYOUT GA

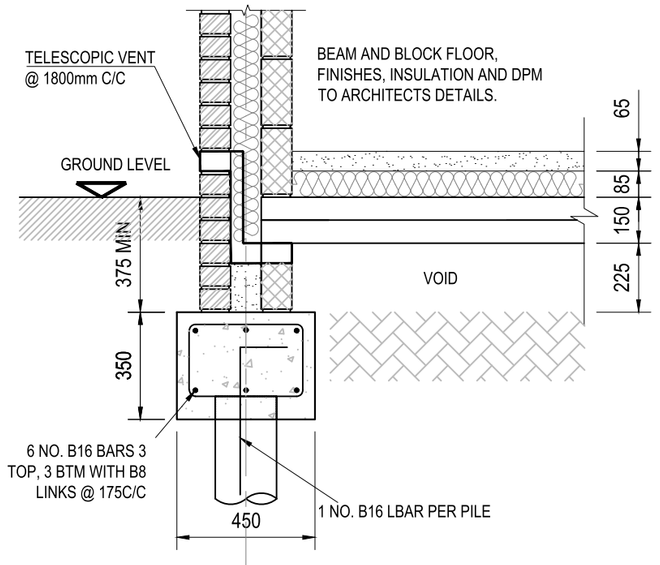

TYPICAL SECTION AA

Scale 1:20

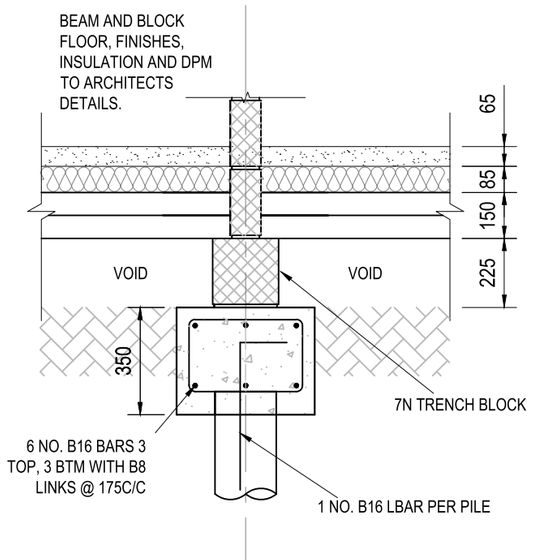

TYPICAL SECTION BB

Scale 1:20

PILING NOTES

1. THIS DRAWING IS TO BE READ IN CONJUNCTION WITH ALL RELEVANT ARCHITECTS AND ENGINEERS DRAWINGS AND SPECIFICATIONS.
2. DO NOT SCALE THIS DRAWING. ALL DETAILS AND DIMENSIONS ARE TO BE CHECKED BY THE CONTRACTOR/ FABRICATOR PRIOR TO COMMENCEMENT OF CONSTRUCTION/ FABRICATION. ANY DISCREPANCIES ARE TO BE REPORTED TO THE ENGINEER.
3. ALL DIMENSIONS ARE IN MILLIMETRES UNLESS NOTED OTHERWISE.
4. ANY EXISTING DIMENSIONS NOTED ON THIS DRAWING ARE TO BE CHECKED BY THE CONTRACTOR PRIOR TO COMMENCEMENT OF WORKS.
5. PILES SHALL BE ACCURATELY INSTALLED IN THE CORRECT POSITION. A MAXIMUM TOLERANCE OF 75mm ON POSITION OF PILES SHALL BE ACCEPTED AT THE DISCRETION OF THE ENGINEER. THE MAXIMUM TOLERANCE TO THE PERPENDICULAR OF VERTICAL PILES SHALL BE 40mm VARIANCE IN 3m PROVIDED THAT MOMENTS OR FORCES CREATED BY INACCURATE DRIVING ARE TAKEN DIRECTLY BY THE PILES WITHIN THE ACCEPTED FACTOR OF SAFETY.
6. THE SETTING OUT OF GRID LINES SHALL BE DONE BY THE CONTRACTOR WHO SHALL PROVIDE THE PERMANENT DATUM LEVEL AND BACK MARK FOR THE PURPOSE OF ESTABLISHING CUT OFF LEVELS. SETTING OUT OF INDIVIDUAL PILES SHALL ALSO BE CARRIED OUT BY THE CONTRACTOR
8. THE CONTRACTOR SHALL PROVIDE THE STRUCTURAL CONSULTANT WITH TWO COPIES OF THE DRIVING RECORD DETAILING ITEMS REQUIRED BY THE ENGINEER AS THE WORK PROCEEDS.
9. PILES SHALL BE CONCRETED UP TO A LEVEL 300mm ABOVE THE REQUIRED CUT OFF LEVEL. EACH PILE SHALL HAVE AT LEAST ONE BAR OF 16mm DIAMETER EACH WITH A 450mm LAP BEYOND THE REQUIRED CUT OFF LEVEL FOR TYING INTO THE GROUND BEAMS.
10. ALL PILE TESTING TO BE CARRIED OUT USING KENTLEDGE, AND METHODS USING TENSION ANCHOR PILES ARE NOT TO BE ADOPTED.

CONCRETE NOTES

1. THIS DRAWING TO BE READ IN CONJUNCTION WITH ALL RELEVANT SPECIALISTS DRAWINGS AND SPECIFICATIONS. ANY DISCREPANCIES TO BE BROUGHT TO THE ATTENTION OF THE ENGINEER.
2. REINFORCED STRUCTURAL CONCRETE TO BE DESIGNATED MIX RC35 IN ACCORDANCE WITH BS EN 206-1/BS 8500.
3. BLINDING CONCRETE TO BE DESIGNATED MIX GEN3 to BS EN 206-1/BS 8500
4. ALL STEEL REINFORCEMENT TO BE IN ACCORDANCE WITH BS 4449:2005.
   GRADE 500 DEFORMED BARS - DENOTED 'H' ON DRAWING
   GRADE 500 ROUND BARS - DENOTED 'X' ON DRAWING
5. ALL REINFORCEMENT TO BE SCHEDULED,DIMENSIONED,BENT AND CUT IN ACCORDANCE WITH BS8666:2005. THIS DRAWING TO BE READ IN CONJUNCTION WITH RELEVANT BAR BENDING SCHEDULES
6. THE MINIMUM CONCRETE COVER TO REINFORCEMENT :
   FOUNDATIONS - 50mm (Min) ALL FACES
   SLABS - 25mm TOP, 40mm BOTTOM
   PILE CAPS - 50mm TOP & SIDES, 75mm BOTTOM
7. BARS ARE TO BE DISPLACED LOCALLY TO LAID HOLES OR OBSTRUCTIONS LESS THAN 100mm IN LENGTH OR DIAMETER.
8. SUCH ADDITIONAL REINFORCEMENT AS REQUIRED TO MAINTAIN THE BAR IN POSITION AS DETAILED SHALL BE PROVIDED BY THE CONTRACTOR.
9. CONTRACTOR TO USE APPROVED SPACER BLOCKS.
10. CONCRETE FINISHES
    QUALITY OF FINISH - CLASS 2 : BS8110 CL 6.2.7.2
    SURFACE FINISH - TYPE A : BS8110 CL 6.2.7.3
11. MINIMUM LAP LENGTHS ARE AS FOLLOWS:
    H10= 400 ; H12 = 475 ; B16 = 625 ; H20 = 775 ; H25 = 950
12. MINIMUM LAP TO MESH REINFORCEMENT IS TO BE 450mm
9. THE CONTRACTOR IS TO PROVIDE THE ENGINEER WITH DETAILS OF THE PROPOSED POUR SEQUENCE OF ALL GROUND BEARING SLABS IN ADVANCE OF THE WORKS. THE CONTRACTOR AND ENGINEER ARE TO AGREE THE LOCATION OF JOINTS IN ADDITION TO THOSE INDICATED ON THE DRAWING.
10. POSITION CODES:
    AB - Alternate Bars; STG - Bars Staggered; ABR - Alternate Bars Reversed;
    AW - Alternate With; EW - Each Way; MK - Bar Mark; EF - Each Face

- ALL PILES DRIVEN TO SET BY SPECIALIST , SWL 130kN, F.O.S. 2.6.
- ALL SETTING OUT TO BE CHECKED AND APPROVED PRIOR TO INSTALLTION OF PILES.

ONLY PDF/DWG ISSUES OF THIS DRAWING ARE CONTROLLED. ALL OTHER FORMATS (e.g. DWG AUTOCAD FILES) ARE UN-CONTROLLED AND ARE USED AT YOUR OWN RISK.

NOTE FOR CONTRACTORS

THIS ADS DRAWING SHOULD BE CONSIDERED ALONG WITH THE RISK INFORMATION CONTAINED IN THE CDM PRE CONSTRUCTION INFORMATION. THIS INFORMATION WILL INCLUDE DETAILS OF THE SIGNIFICANT RISK WHICH ADS HAVE IDENTIFIED WHICH MAY ARISE FROM CONSTRUCTING THE DESIGNS SHOWN ON THIS DRAWING. A COMPETENT CONTRACTOR SHOULD BE AWARE OF THE TYPICAL RISKS ASSOCIATED WITH DOING THIS WORK.

NOTE FOR WORKERS

DO NOT START YOUR WORK UNLESS YOU KNOW THE RISK AND CONTROLS RELATING TO THE WORK ON THIS DRAWING (INCLUDING SAFE SEQUENCES OF WORK AND EQUIPMENT)

STOP

DO NOT ISSUE COPIES OR PARTS OF THIS DRAWING WITHOUT THE ABOVE NOTE FOR WORKERS(UNLESS YOU ARE SURE THAT THE WORKERS CAN UNDERTAKE THE WORK SAFELY).

GENERAL NOTES

1. THIS DRAWING IS TO BE READ IN CONNECTION WITH ALL RELEVANT ARCHITECTS AND ENGINEERS DRAWINGS AND SPECIFICATIONS.
2. DO NOT SCALE FROM THIS DRAWING. ALL SETTING OUT DIMENSIONS ARE TO BE CHECKED AND VERIFIED ON SITE PRIOR TO COMMENCEMENT OF ANY BUILDING WORKS & FABRICATION OF MATERIALS. ANY DISCREPANCIES ARE TO BE REPORTED TO THE ENGINEER.
3. ALL WORKMANSHIP AND MATERIALS ARE TO COMPLY WITH THE CURRENT BUILDING REGULATIONS, BRITISH STANDARDS AND CODES OF PRACTICE, ALL MATERIALS SHALL BE FIXED OR APPLIED IN ACCORDANCE WITH THE MANUFACTURES RECOMMENDATIONS. THE CONTRACTOR IS TO TAKE INTO ACCOUNT EVERYTHING DEEMED NECESSARY FOR THE PROPER EXECUTION OF THE WORKS WHETHER INDICATED ON THE DRAWINGS OR NOT TO THE COMPLETE SATISFACTION OF THE LOCAL AUTHORITY
4. FOR FINAL SETTING OUT INFORMATION RELATING TO WALL POSITIONS REFER TO ARCHITECTS DRAWINGS.

REV	DATE	REVISION DETAILS	DRAWN	CHKD	APPRD
P1	03.08.2021	FIRST ISSUE	NMA	AEB	ADS

CLIENT:
HH PILING

PROJECT:
CHORLTON VILLAS, HARDY LANE, MANCHESTER

DRAWING TITLE:
PILE FOUNDATION DETAILS

DRAWING STATUS:
PRELIMINARY

A2

ads structural
Alexandra Business Park
4th Floor, The Tower
Prescot Road, St Helens
WA10 3TP
Tel: 0151 541 4000
info@adsstructural.co.uk

SCALE	DOCUMENT NUMBER	REV
1:50 @ A2	21-HH-325-100	P1

COPYRIGHT RETAINED BY ADS STRUCTURAL LTD. INFORMATION TO BE REPRODUCED WITH PERMISSION ONLY. TO BE READ IN CONJUNCTION WITH ALL OTHER RELEVANT DRAWINGS AND INFORMATION ISSUED AS PART OF THIS APPOINTMENT. CONTRACTOR TO CHECK ALL DIMENSIONS ON SITE.THESE ARE NOT WORKING DETAILS. THESE ARE DESIGN ONLY DRAWINGS AND ARE NOT TO BE USED FOR CONSTRUCTION UNTIL FINAL DRAWINGS ARE PRESENTED OR SPECIFICALLY STATED WITH THE DRAWING STATUS.THESE DRAWINGS ARE INTENDED FOR THE PURPOSE STATED WITHIN THE TITLE BLOCK ONLY