Refresh MAXI illustrated

MAXI, MIDI & MINI REFRESH RANGE – SERIES 1

INSTALLATION, OPERATING AND MAINTENANCE MANUAL

PLEASE LEAVE WITH OPERATOR

A34/098 R1 **ECN 8833 April 2019**

EC DECLARATION OF CONFORMITY
(Guarantee of Production Quality)

We, Imperial Machine Company Limited of:
Unit 1, Abbey Road, Wrexham Industrial Estate, Wrexham, LL13 9RF
Declare under our sole responsibility that the machine

MAXI, MIDI & MINI REFRESH RANGE – SERIES 1

As described in the attached technical documentation is in conformity with the Machinery Directive 2006/42/EC and is manufactured under quality system BS EN ISO 9001. It is also in conformity with the protection requirements of the Electro Magnetic Compatibility Directive 2014/30/EU and is manufactured in accordance with harmonised standards EN 61000-6-1 Immunity and EN 61000-6-3 Emissions (plus product specific standards).
It also satisfies the essential requirements of the Low Voltage Directive 2014/35/EU and is manufactured in accordance with harmonised standard EN 60204-1 Safety of Machinery (Electrical Equipment).

Approved by E Plumb, Engineering Manager

Signed at Wrexham, Date April 2019

DISCLAIMER

Whilst every care is taken in ensuring the information contained herein is accurate, no responsibility implied, or otherwise, is accepted for loss or damage incurred due to this information. It is the responsibility of the reader to ensure the method used is suitable in accordance with relevant health & safety legislation for his particular application and he should satisfy himself by conducting risk assessments and method statements before proceeding with a trial or sample component.

GUARANTEE

This equipment is guaranteed by IMC Britannia for 2 Years from the date of purchase from IMC Britannia or from one of its stockists, dealers or distributors.

The guarantee is limited to the replacement of faulty parts or products and excludes any consequential loss or expense incurred by purchasers. Defects which arise from faulty installation, inadequate maintenance, incorrect use, connection to the wrong electricity supply or fair wear and tear are not covered by the guarantee.

PLEASE OBSERVE THESE INSTRUCTIONS CAREFULLY

This guarantee applies in this form to installations within the UK only.

DELIVERY

- Check the package is complete to the delivery note and that there are no missing items.
- Check the package is undamaged.
- Where items will not be unpacked straight away, check:
  - The shrink-wrap is complete and plastic banding is secure.
  - There are no edges protruding which can become damaged or cause injury. Where edges are exposed, cover using suitable protection.

SAMPLE RATING LABEL

Britannia Kitchen Ventilation Ltd,
LL13 9RF, United Kingdom,
Tel:01926 463 540

Model Ref: REFRESH MAXI Y10010

Design Extract	0.38 m3/S	Frequency	50/60Hz
Design Supply	0.38 m3/S	Amps	1.65
Voltage (light only)	220/240	KW	0.38KW
Phase	1	Date of manufacture	27/03/2018
Serial: 100318 274		Series 2	

Manufactured United Kingdom

www.kitchen-ventilation.co.uk

CONTENTS

DISCLAIMER 3
GUARANTEE 3
DELIVERY 3
SAMPLE RATING LABEL 3
Contents 4
Overview 6
REFRESH MINI, MIDI & MAXI UNITS 7
GLOSSARY OF TERMS 8
SYSTEM OVERVIEW 9
ASSEMBLY, INSTALLATION AND COMMISSIONING 10
Risk Assessment 10
Access and Offloading 10
Warnings and Cautions 11
STORAGE AND PRESERVATION 12
Preservation 12
Assembly 12
Unpacking Procedures 12
Preparation for Assembly 12
Personal Protective Equipment (PPE) 12
ASSEMBLY PROCEDURES 13
INSTALLATION 13
Tools, Equipment, Consumables and Fixings Required 13
Tools: 13
Equipment: 13
Consumables: 14
Fixings: 14
General Installation Notes 14
Installing the Unit 15
COMMISSIONING 15
Commissioning Procedures 15
OPERATION 16
Introduction 16
Operation Overview 16
Fan control panel 17
Operating the controller 17
Setting the Fan Start Speed 17

MAINTENANCE 18
Introduction 18
Equipment, Tools, Consumables and PPE 19
Equipment 19
Tools 19
Consumables 19
PPE 19
PREVENTIVE MAINTENANCE 20
Preventive Maintenance Overview 20
Preventive Maintenance Schedule 21
Preventive Maintenance Procedures 23
Cleaning Stage 1 Baffle Type Grease Filters 24
Removing Grease from the Canopy 25
Cleaning Down Visible Refresh Unit Surfaces 26
Deep Cleaning the Refresh Unit 26
Cleaning Stainless Steel 27
Routine Surface Cleaning 27
Recommended Cleaning and Maintenance Contractors 30
Maintenance of Fire Suppression Systems (Where Installed) 30
Removing Stage 2 Filters 31
Removing Stage 3 Filters 32
Removing Stage 4 Carbon Filters 33
Replacement Procedures 34
Replacing Stage 2 Filters 34
Replacing Stage 3 Filters 35
Replacing Stage 4 Carbon Filters 36
Maintenance Checks and Visual Inspections 38
Visual Inspection 38
wiring diagrams 40
MINI & MIDI 40
MAXI 41
SPARES 42
ORDERING SPARE PARTS 43

OVERVIEW

This installation, operation and maintenance manual covers:

Refresh Mini

Refresh Midi

Refresh Maxi

REFRESH MINI, MIDI & MAXI UNITS

The Refresh Mini, Midi & Maxi units are similar in construction and filtration design as the Refresh Ultima unit. The Mini, Midi & Maxi units vary in width and therefore the number of filters installed to allow further items of equipment to be installed.

The following graphic provides a detailed overview of the unit. The Refresh 'Midi' is shown below as a 'typical' unit:

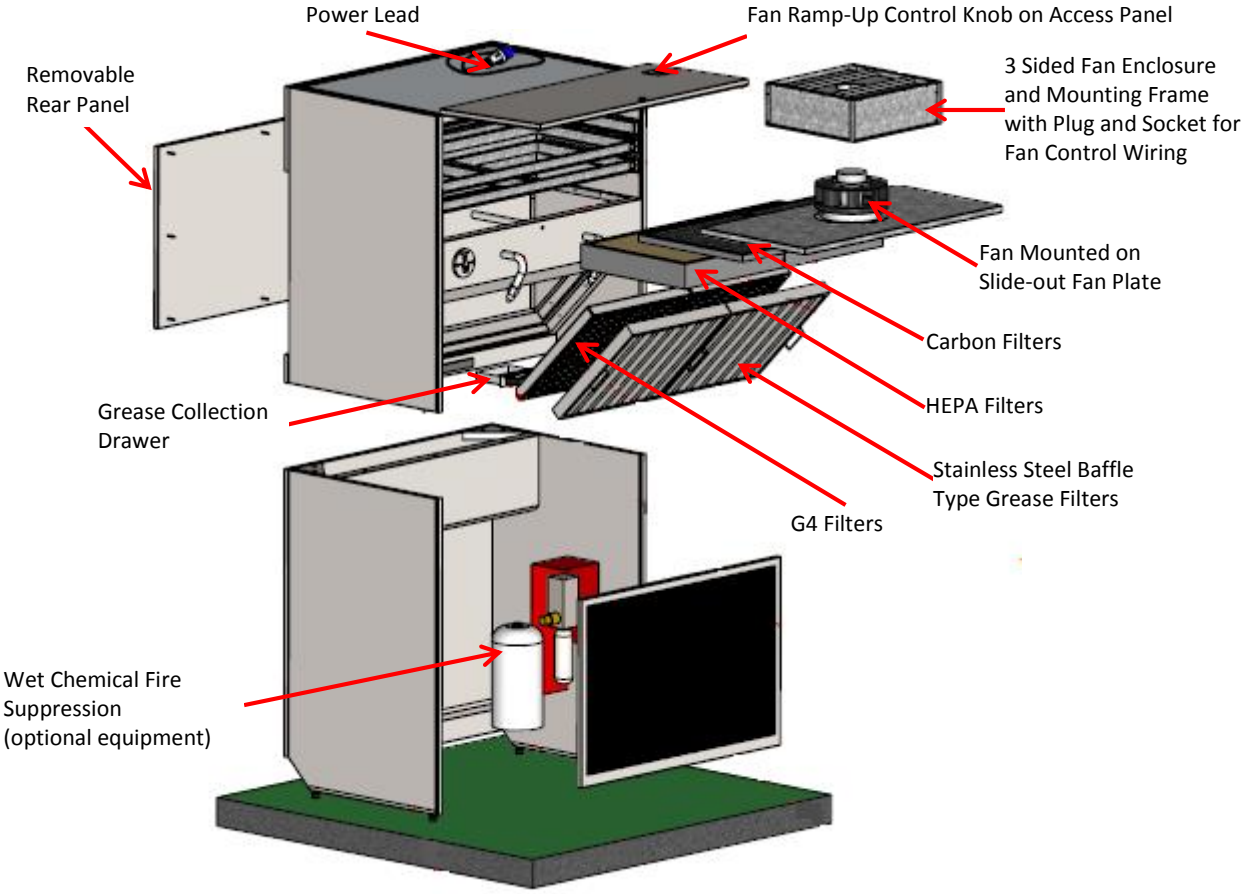

Overview of Refresh Midi Unit (Mini & Maxi are similar)

GLOSSARY OF TERMS

This section provides a glossary of terms used in the manual.

Term	Definition
Refresh Unit	Product name given to a range of stainless steel kitchen canopies
Refresh Control Panel	Product name for the twin function intelligent controls package to control the fan speed via operator buttons and to monitor the life-time of each filtration stage
Fan	A backward curved centrifugal fan housed in the Services Tower to draw grease laden air through the filter stages
Canopy	A rigid, self-supporting stainless steel structure which acts as a point of extraction for grease laden kitchen air
Baffle Filter	A high efficiency filter for removing entrained grease and moisture from extract air
Grease Drainage Hole	Allows drainage of entrained grease droplets and moisture which fall from the grease filters

SYSTEM OVERVIEW
Functional Description

When cooking, hot, humid and grease laden air is extracted by the unit.
A backward curved centrifugal fan, mounted on a slide-out fan plate at the top of the unit, draws contaminated grease laden air from cooking appliances through four stages of filtration.

Note: The Refresh Maxi has 2 no fans installed.
The four stages of filtration are:
Stage 1: High efficiency Britstream baffle-type grease filter unit mounted in front of the stage 2 filters
Stage 2: G4 pleated filter panels mounted behind the baffle-type grease filters
Stage 3: HEPA filter panels
Stage 4: Carbon filters; loose granule, re-fillable to reduce odours

Refer to the following process flow which describes the four stages of filtration:

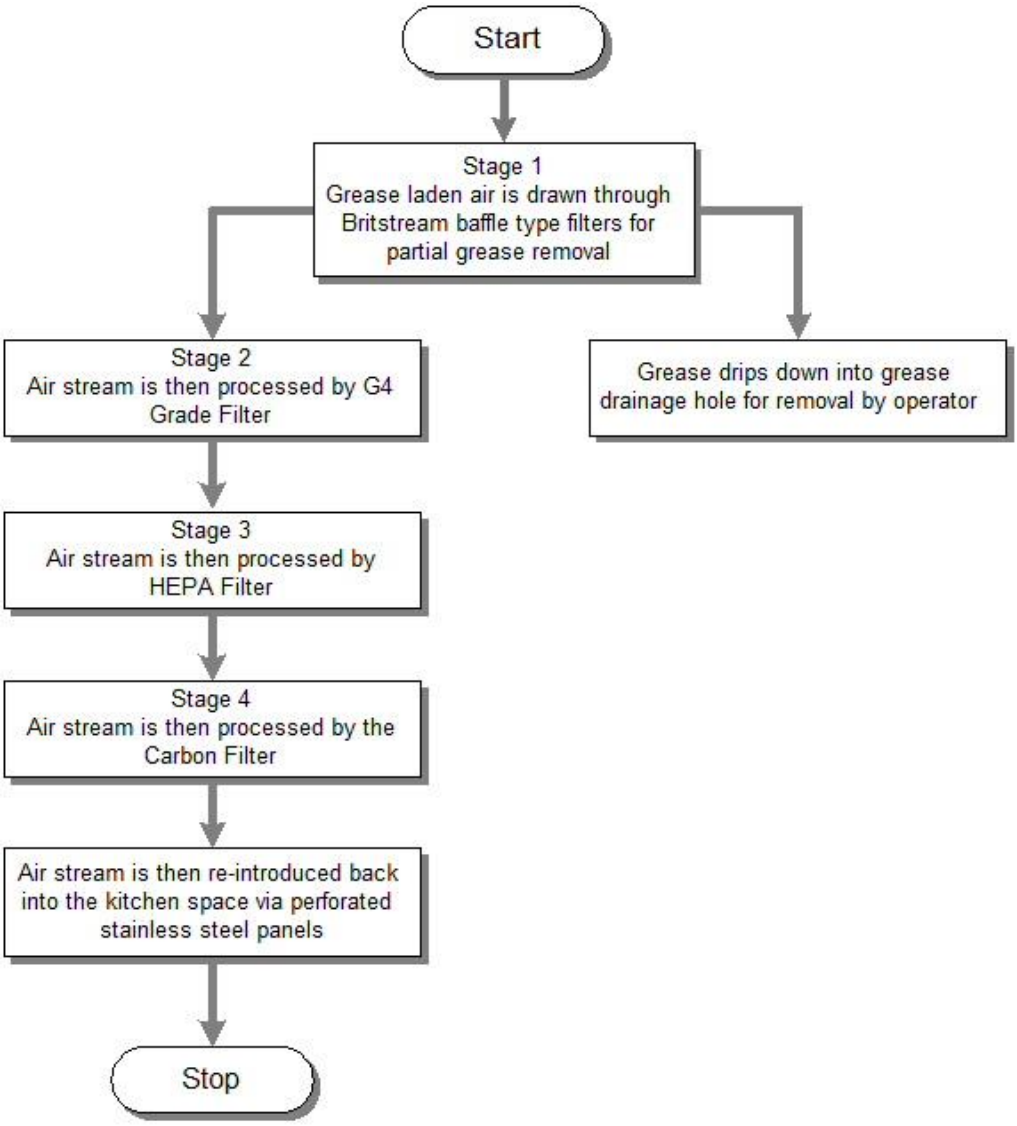

SUPPLY AIR DIFFUSER: The fixed supply air diffuser allows filtered air to be reintroduced back into the kitchen space. Refer to the picture below.

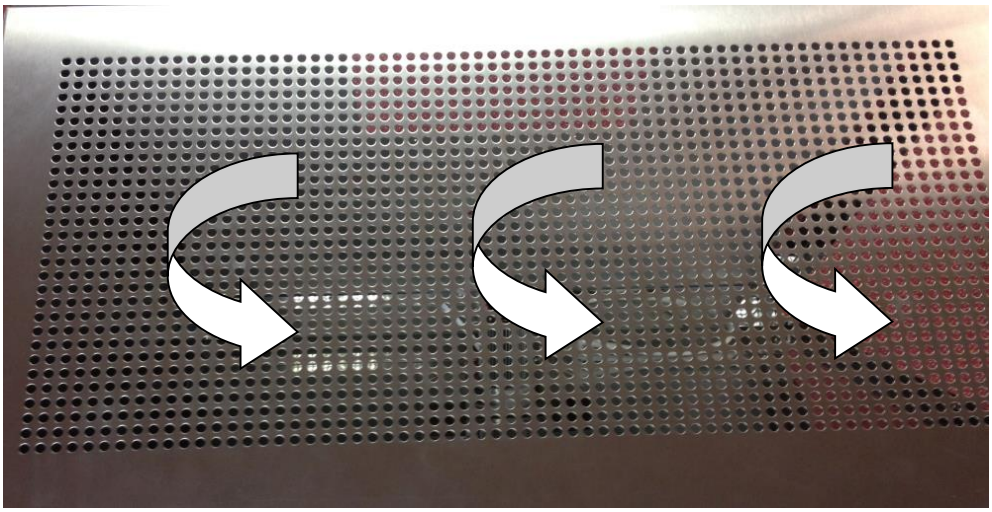

Perforated Diffuser Panel

ASSEMBLY, INSTALLATION AND COMMISSIONING
This section refers to all Refresh units.

Risk Assessment
A full **risk assessment** must be carried out before assembly and installation work commences on site. The risk assessment should identify all Personal Protective Equipment (PPE) requirements. This should be undertaken prior to the installation team arriving. Consideration should also be given to drafting a full method statement for the process.

Access and Offloading
A safe **access** route must be established into the area in which the Refresh Unit will be installed. This area is to be free from obstruction
A suitable **offloading** point must be identified before you begin to unload and it should be as close to the installation area as possible

WARNINGS AND CAUTIONS

WARNING:

DO NOT INSTALL THIS EQUIPMENT FOR THE VENTILATION OF GAS, OIL OR SOLID FUELLED EQUIPMENT. RISK TO THE HEALTH OF OPERATIVES CAUSED BY THE ACTUAL COMBUSTION PROCESS WHICH USES UP AVAILABLE OXYGEN FROM THE COOKING SPACE AND CREATES TOXIC CARBON BASED GAS EMISSIONS. ONLY ELECTRICALLY POWERED EQUIPMENT MUST EVER BE VENTILATED BY THIS TYPE OF SYSTEM

WARNING:

COMPETANT PERSONNEL FAMILIAR WITH THE ASSESSMENT OF HAZARDS AND RISKS ASSOCIATED WITH INDUSTRIAL ELECTRICAL AND VENTILATION EQUIPMENT SUCH AS FANS AND AIR HANDLING UNITS SHOULD INSTALL THE PRODUCT.

WARNING:

USE LIFTING EQUIPMENT WHICH HAS A SUITABLE SAFE WORKING LOAD FOR THE EQUIPMENT BEING LIFTED.

WARNING:

ENSURE STEPS, PODIUM STEPS, SCISSOR LIFT OR MOBILE SCAFFOLD TOWER ARE SECURE AND STABLE BEFORE USE.

WARNING:

MAKE SURE THE CANOPY IS FULLY SECURED BEFORE REMOVING THE SUPPORT STANDS

CAUTION:

Supplied packaging provides protection against scratches and scrapes only

STORAGE AND PRESERVATION

Storage

CAUTION:

Supplied packaging provides protection against scratches and scrapes only.
Items must not be stored in high traffic areas. No impact protection is provided.

Preservation

Items must be stored in dry conditions.

Assembly

Preparation for Unpacking

- Ensure you place items to be unpacked as near as possible to the site of installation.
- Ensure you have sufficient free space to work.

Unpacking Procedures

- Using a suitable tool, remove the plastic banding around the item
- Remove all packaging as necessary.

Preparation for Assembly

Personnel

- Skilled site engineers
- Senior site installation engineers (site Foreman).

Personal Protective Equipment (PPE)

The need for **PPE** must be identified once a full risk assessment has been carried out.
Below is a list of PPE that **must** be worn when assembling BKV equipment:

- Safety footwear with steel mid-sole, steel toe caps, padded ankle protection and high grip soles.
- High visibility vest
- Kevlar gloves
- Carpenter gloves
- Safety spectacles
- Safety goggles.
- Tools Required:
- Suitable and approved lifting equipment
- Adjustable support stands
- Spirit level
- Suitable hand tools]
- Suitable spanner to tighten M10 fixings.

ASSEMBLY PROCEDURES

The following procedures cover only the Refresh Midi and Maxi units as these units require assembly. The refresh Mini is supplied a one-piece unit.

- Prepare a clear & level area around the proposed installation area in accordance with the drawings with approximately 1 metre clearance all-round the unit for access.

Note: The unit must be installed on a level surface.

- Install the bottom unit in the proposed installation area.
- Using the spirit level, make sure the bottom unit is level. Adjust the feet accordingly as necessary and then recheck the level.
- Using safe and suitable methods lift and then position the first half of the unit on top of the base and lock into position.
- Assemble the filters and cover panels to the unit as necessary.

INSTALLATION

Preparation for Installation

WARNING:

DO NOT INSTALL THIS EQUIPMENT FOR THE VENTILATION OF GAS, OIL OR SOLID FUELLED EQUIPMENT. RISK TO THE HEALTH OF OPERATIVES CAUSED BY THE ACTUAL COMBUSTION PROCESS WHICH USES UP AVAILABLE OXYGEN FROM THE COOKING SPACE AND CREATES TOXIC CARBON BASED GAS EMISSIONS. ONLY ELECTRICALLY POWERED EQUIPMENT MUST EVER BE VENTILATED BY THIS TYPE OF SYSTEM

You must have the following completed documentation before installation of this equipment:

- Site installation form
- Manufacture and location drawings
- Site survey form
- Onsite inspection form
- Risk assessments
- Suitable Method Statements.

Tools, Equipment, Consumables and Fixings Required

Tools:

- Spirit level
- Suitable spanner to tighten M6 fixings
- Suitable tool to tighten the canopy to the kitchen wall (where necessary).

Equipment:

- Mobile tower scaffold
- Podium steps
- Steps (when required)
- Scissor Lift (when required)
- Suitable and approved lifting equipment
- Adjustable support stands
- Battery Powered Impact Drill
- Battery Powered Hammer drills
- Battery Powered Hand drills
- Battery Powered Grinderette.

Consumables:

- Unistrut
- Fixings box containing an assortment of mechanical fixings and accessories
- Silicone sealant.

Fixings:

- M6 fixings
- M10 fixings
- Suitable screws, plugs or anchors as necessary (to fix the canopy against the wall).

General Installation Notes

- To avoid the risk of accidents and damage to the kitchen Refresh Unit the following should be adhered to:
- You must install the Refresh Unit in accordance with these instructions
- Any installation work must be carried out by competent personnel
- In all cases, a minimum of two competent personnel are required
- Installation personnel should be fully trained in all relevant tools and equipment required to successfully install the Refresh Unit
- A safe method of access to the fixing points must be gained by use of previously identified suitable access equipment
- It is suggested that at least a small air change rate in the order of 10 to 15 air changes per hour be incorporated if possible. This will provide a small amount of background ventilation, create a negative pressure and help retain cooking odours within the kitchen space
- Before installation, check the building structure to which the Refresh Unit is to be fitted for:
  - Electric cables
  - Gas pipes
  - Water pipes.
- All equipment installed below the Refresh Unit must either be:
  - Fully removable, or
  - Mounted or positioned in such a way as to allow regular access to the filter grease drawer
  - Mounted or positioned in such a way as to allow regular access to the door on the Inside face of the tower.

Installing the Unit

Please note the following step guidelines must be taken into consideration during the installation of BKV products.

WARNING:

COMPETENT PERSONNEL FAMILIAR WITH THE ASSESSMENT OF HAZARDS AND RISKS ASSOCIATED WITH INDUSTRIAL ELECTRICAL AND VENTILATION EQUIPMENT SUCH AS FANS AND AIR HANDLING UNITS SHOULD INSTALL THIS EQUIPMENT.

- Check the unit is correctly assembled. Refer to Refresh Mini, Midi & Maxi Assembly Procedures.
- Where it is necessary to fix the unit against a wall:
  - Using the battery powered equipment, Unistrut and fixings from the fixings box, mount the unit against the wall.
  - Using the spirit level, make sure the unit is still level.
  - Using screws, plugs or anchors, fix the unit to the wall. Using a suitable tool, tighten the fixings until the unit is fully secure.
- Connect the main power lead to the incoming power supply.
- Install the required filters, blanks and panels into correct openings and positions.
- Complete the “On site final inspection” checklist.
- The customer site contact or main contractor must inspect the completed installation and sign the “Site installation form”. All comments, provisos or alternative instructions given must be noted on this form. Leave a copy with signee for their records.

COMMISSIONING

Commissioning Procedures

The system is ready to use once it has been installed by a competent electrical technician.

Post Commissioning Procedures:

None, the system is plug-and-play

OPERATION

Introduction

This section provides operating instructions for the MINI, MIDI & MAXI units
Warnings and Cautions use the following conventions:

WARNING - danger of death or to the health of personnel

CAUTION - danger of damage to equipment.

It is recommended that the end user should carry-out detailed in-house risk assessments for all aspects of operating Refresh Units.

Operation Overview

The Refresh Mini, Midi and Maxi have a hand operated rotary ON/OFF switch and fan speed controller located at the upper right hand section of the unit. Turn the rotary switch clockwise to power the unit on.

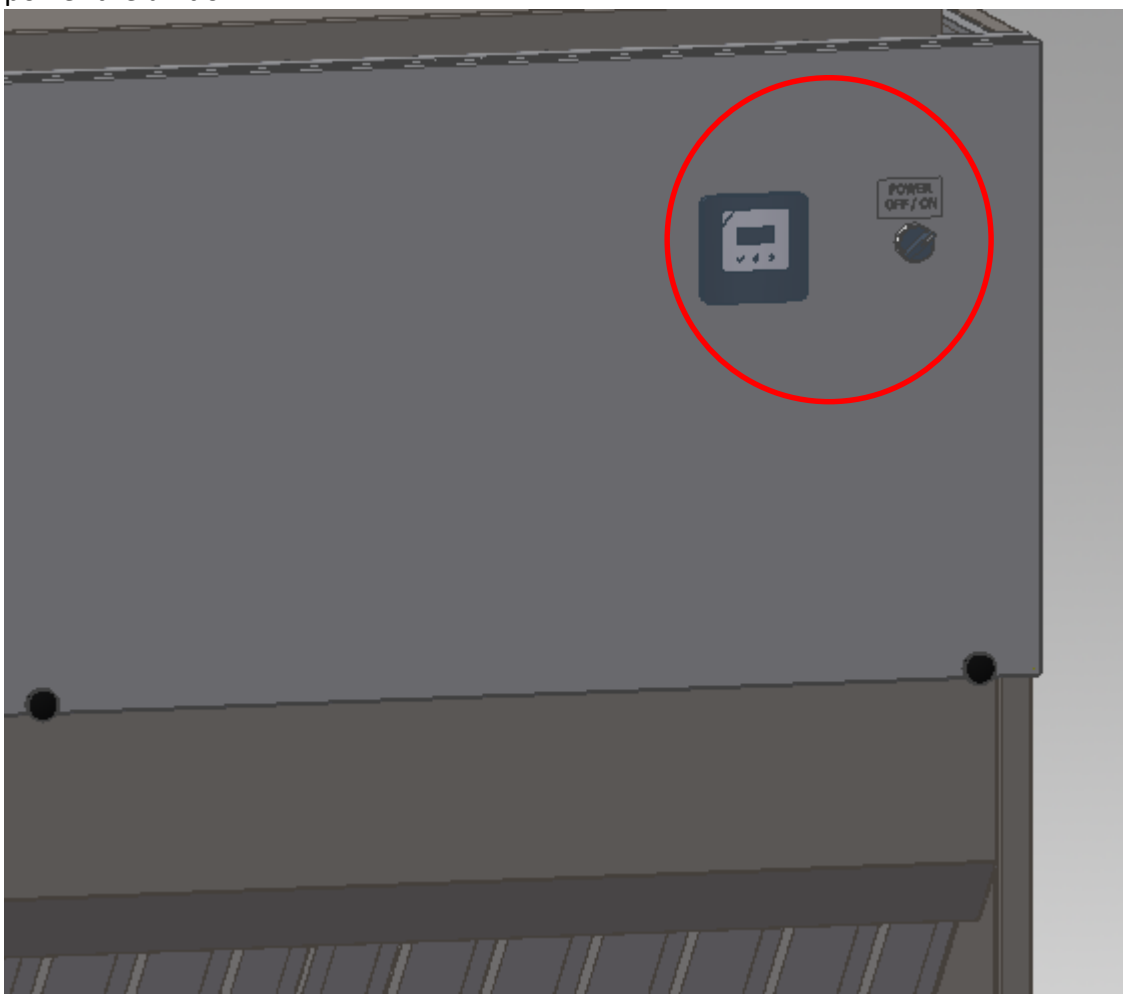

ON/OFF Switch & Fan speed controller location

Fan control panel

Fan Speed Controller

Operating the controller

The RDCZ can be switched on and off by pressing and holding the button for 4 seconds. The decimal point on the display indicates that the unit is in Stand-by mode. To increase the output value or step, use the up button. To decrease the output value or step, press the down button.

Setting the Fan Start Speed

1. Press the two buttons simultaneously and then release them.
2. Press the button three times until the message “Start Speed” can be seen to scroll across the display.
3. Press the button to access the set value.
4. Then use the buttons as required, to select the required start speed i.e. “100”.
5. Press and hold the button for 4 seconds, until the display begins to flash. This confirms that the setting has been made.
6. To test that the setting has been saved: switch the power to the machine off and then on again, using the rotary ON/OFF switch. When the machine starts back up, you should see the fan speed on the display, ramp up from “45” right up to “100” and you will hear the fan/s speed increase to the maximum.

MAINTENANCE

Introduction

Warnings and Cautions use the following conventions:

WARNING:

IF ANY INFORMATION PROVIDED IN THIS OPERATION AND MAINTENANCE MANUAL IS NOT CLEAR YOU MUST STOP WORK AND CONTACT IMC BRITANNIA KITCHEN VENTILATION.

WARNING:

CLEANING AND MAINTENANCE MUST ONLY BE UNDERTAKEN BY COMPETENT PERSONNEL ONCE ALL EQUIPMENT SUCH AS OVENS, GRILLS AND FYERS ARE SWITCHED OFF AND ALL SURFACES HAVE SUFFICIENTLY COOLED.

WARNING:

FILTERS STAGES SHOULD ONLY BE REPLACED BY TRAINED OPERATIVES OR BRITANNIA KITCHEN VENTILATION SERVICE TEAM, CONTACT BRITANNIA FOR FURTHER DETAILS.

WARNING:

YOU SHOULD WEAR SUITABLE GRIPPING, CUT-RESISTANT WORK-GLOVES WHEN HANDLING AND CLEANING THE REFRESH UNIT.

WARNING:

ACCESS TO FILTERS FOR REMOVAL & REPLACEMENT WILL OFTEN MEAN REACHING ABOVE HEAD HEIGHT. YOU MUST USE SUITABLE ACCESS EQUIPMENT AND SAFE WORKING PROCEDURES.

WARNING:

YOU MUST WEAR SUITABLE RUBBER GLOVES WHEN CLEANING WITH ANY ACID SOLUTIONS. SPECIAL PRECAUTIONS ARE NECESSARY WITH OXALIC ACID. SOLVENTS SHOULD NOT BE USED IN ENCLOSED PLACES.

WARNING:

USE SUITABLE AND APPROVED EQUIPMENT WHEN WORKING AT HEIGHT.

WARNING:

IF THE INTERNAL SURFACES OF THE SYSTEM ITSELF ARE NOT REGULARLY AND THOROUGHLY CLEANED, THEN THE RESIDUAL ODOURS OF DEPOSITED GREASE THROUGHOUT THE SYSTEM WILL BE DETECTABLE IN THE RETURN SUPPLY AIR FLOW RE-ENTERING THE ROOM SPACE.

CAUTION:

If primary filtration is not regularly cleaned & maintained, then hygiene and fire risks are created down-stream.

CAUTION:

The particulate filters are positioned to protect the fan and carbon filters. If they are not monitored and replaced regularly, then the life-span of the carbon filters will be drastically reduced and the fan will become grease loaded and could start to run out of balance causing long-term damage to bearings and impeller.

EQUIPMENT, TOOLS, CONSUMABLES AND PPE

Equipment

- Commercial Dishwasher
- Suitable and approved access equipment
- Bucket.

Tools

- Allen key (6 mm)
- Small flat bladed screwdriver.

Consumables

- Lint free cleaning cloth
- Clean dry soft cloth
- Mild detergent (Fairy Liquid)
- Commercial heavy duty detergent
- 100% isopropyl alcohol
- Clean warm water
- Suitable Acetone and Alcohol
- Suitable Abrasive free stainless steel cleaning cream
- Oxalic Acid
- Suitable swab
- Suitable impregnated nylon pads
- Suitable scurf's dressed with iron free abrasives
- Suitable container to drain grease into.

PPE

- Kevlar gloves (for general equipment handling and cleaning)
- Rubber gloves (when cleaning using acid, alcohol and acetone).

PREVENTIVE MAINTENANCE

Preventive Maintenance Overview

Britannia canopies and their components are designed to be easy to clean providing that cleaning intervals are not left too long. When too long a period is left between cleans, grease will become baked-on and require special attention. An enhanced aesthetic appearance will be achieved if the cleaned surface is finally wiped dry.

No grease filtration is 100% efficient and therefore there will always be a certain amount of grease carried through the filters and deposited on the internal surfaces of the filter housings, plenums and ductwork.

The amount of grease carried through any filtration system will depend very much on the type of cooking and ingredients used. If left unattended, this layer of grease on the non-visible surfaces of the Refresh Unit creates both hygiene and fire risks.

Regular inspections are recommended and should cover both the internal and external Refresh Unit surfaces, especially non-visible ones.

We strongly recommend that the end user should carry-out detailed in-house risk assessments for all aspects of maintaining Refresh Units.

When handling any components of a canopy, it is imperative that operatives wear proper, gripping, cut-resistant work-gloves for protection against metal edges, as well as the detergents and cleaning agents used. No matter how well finished a fabrication may be, it is easy to cut soft water-soaked skin during the cleaning process.

Canopies and their components by their very nature will have a coating of grease and therefore will be slippery and difficult to handle. Suitable gloves can be obtained easily through most suppliers of personal protective equipment. Access to filters for removal & replacement will often mean reaching above head height and as such, suitable access equipment and or safe working procedures may be required.

The life expectancy and efficiency of each component part of the Refresh Unit, relies upon careful maintenance of the entire system. If the maintenance of one component is neglected, then it can have a serious knock-on effect to other parts of the system rendering them useless or creating permanent damage.

In essence, good maintenance costs time and money and must be budgeted for. However, a lack of maintenance will inevitably cost many times as much in the longer term; due to repair bills, replacement parts, operator discomfort and occupational health risks.

A properly controlled and planned maintenance schedule must be implemented immediately in order that maximum system efficiency is achieved at all times so minimising occupational health risks to operatives. This will also reduce the likelihood of nuisance odours and fumes occurring.

Preventive Maintenance Schedule

The frequency of preventive maintenance will depend upon:

- The type of establishment
- The level of output
- The type of cooking
- The regularity and duration of cooking.

Level of output and establishment types have been categorised as follows:

- Light: pub & bar food, small cafes, coffee shops and tea shops
- Light/medium: schools, hospitals, care homes, office and workplace kitchens
- Medium: Italian, French, hotel, pub, pizza and supermarket restaurants
- Medium/high: small, low output fast food restaurants, steak houses, kebab and chip shops
- High: large, high output fast food, Mexican, Oriental and Asian restaurants
- Very high: food production factories.

Deciding upon when cleaning should take place and how often, is mostly subjective and responsibility is ultimately with the manager of the facility.

Regular inspections are recommended and should cover both the internal and external canopy surfaces. As a very rough guide to cleaning schedules please refer to the following tables:

Cleaning and maintenance of kitchen canopies and associated items should only be carried out by suitably skilled and trained operatives, in the absence of such operatives a specialist sub-contractor should be engaged and retained for the purpose. If in-house staff members are to be used, they will require training in monitoring, testing and handling of the various components.

Failure to properly maintain the Refresh unit and its components will invalidate any warranties or guarantees.

Special care should be taken over the disposal of non-cleanable items to ensure that all relevant legislation is considered and adhered to.

The table below details the corrective maintenance procedures and frequencies required (Weeks/Hours) for all Refresh units:

Note: The above daily, weekly & monthly time intervals assume 6 hours cooking per day and cooking on 5 days per week.

Equipment	Preventive Maintenance Frequency					
	Level of Output					
	Light	**Light/ Medium**	**Medium**	**Medium/ High**	**High**	**Very High**
Cleaning Stage 1 Baffle Filters	7 Days	7 Days	5 Days	3 Days	1 Days	1 Days
Cleaning Grease Collection Drawers	7 Days	7 Days	5 Days	3 Days	1 Days	1 Days
Cleaning Down the Refresh Unit	7 Days	7 Days	5 Days	5 Days	5 Days	5 Days
Deep Cleaning the Refresh Units Internal Surfaces	6 Months	6 Months	6 Months	5 Months	3 Months	3 Months
Cleaning the Service Tower Internal Ductwork	12 Months	12 Months	8 Months	6 Months	4 Months	3 Months
Cleaning Stainless Steels						
Routine Surface Cleaning	Non-scheduled (as required depending upon output). Clean all stainless steel surfaces when it is dirty in order to restore its original appearance]					
Cleaning Fingerprints						
Cleaning Stubborn Stains and Discolouration						
Cleaning Oil and Grease Marks						
Cleaning Corrosion						
Replacing Stage 2 G4 Filters	1 Week (30 hours)	1 Week (30 hours)	2-3 days (18 hours)	2-3 days (18 hours)	1 day (6 hours)	1 day (6 hours)
Replacing Stage 3 HEPA Filters (Mini, Midi & Maxi)	6 months (720 hours)	5 months (600 hours)	4 months (480 hours)	3 months (360 hours)	2 months (240 hours)	1 month (120 hours)
Replacing Stage 4 Carbon Disposable Filters (Mini, Midi & Maxi)	12 months (1440 hrs)	9 months (1080 hrs)	6 months (720 hours)	4 months (480 hours)	3 months (360 hours)	3 months (360 hours)

Preventive Maintenance Procedures
Refer to the following procedures as necessary:

- Cleaning Stage 1 Baffle Type Grease Filters
- Removing Grease from the Canopy
- Cleaning Down Visible Refresh Unit Surfaces
- Deep Cleaning the Refresh Unit
- Cleaning the Service Tower Internal Ductwork
- Cleaning Stainless Steel
- Routine Surface Cleaning
- Cleaning Fingerprints
- Cleaning Stubborn Stains and Discolouration
- Cleaning Oil and Grease Marks
- Cleaning Corrosion
- Removing Scratches on Brush Satin Finishes.

WARNING:
CLEANING AND MAINTENANCE MUST ONLY BE UNDERTAKEN BY COMPETENT PERSONNEL ONCE ALL EQUIPMENT SUCH AS OVENS, GRILLS AND FYERS ARE SWITCHED OFF AND ALL SURFACES HAVE SUFFICIENTLY COOLED.

WARNING:
ACCESS TO FILTERS FOR REMOVAL & REPLACEMENT WILL OFTEN MEAN REACHING ABOVE HEAD HEIGHT. YOU MUST USE SUITABLE ACCESS EQUIPMENT AND SAFE WORKING PROCEDURES.

WARNING
IF THE INTERNAL SURFACES OF THE SYSTEM ITSELF ARE NOT REGULARLY AND THOROUGHLY CLEANED, THEN THE RESIDUAL ODOURS OF DEPOSITED GREASE THROUGHOUT THE SYSTEM WILL BE DETECTABLE IN THE RETURN SUPPLY AIR FLOW RE-ENTERING THE ROOM SPACE.

Cleaning Stage 1 Baffle Type Grease Filters

CAUTION:
If primary filtration is not regularly cleaned & maintained, then hygiene and fire risks are created down-stream.

These are high efficiency Britstream baffle-type grease filters. Filter cleaning should only take place when cooking operations are suspended.

1. Switch **OFF** and isolate the electrical power supply.

WARNING:
USE SUITABLE AND APPROVED EQUIPMENT WHEN WORKING AT HEIGHT.

2. Safely position suitable access equipment. Remove the grease filter by gripping and lifting the panel upward and then tilting/lowering the bottom edge forward and clear of the housing. Refer to the picture below.

3. Using a commercial dishwasher, clean the grease filter.
4. Replace the grease filter making sure that the panel is the right way around with any framework drain holes at the front, lowest edge.
5. Switch **ON** the electrical power supply.

Removing Grease from the Canopy

WARNING:
ENSURE THE UNIT IS SWITCHED OFF AND SUITABLE PPE IS USED

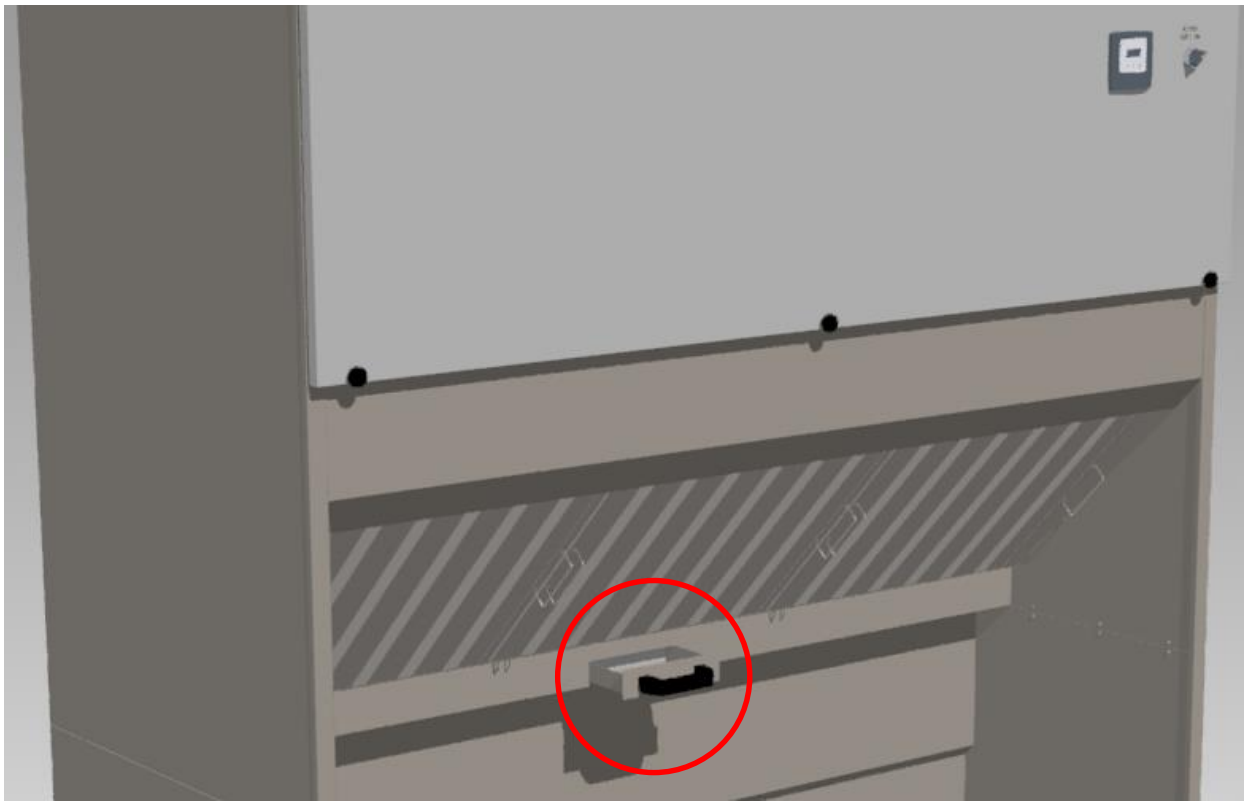

Grease Drainage Tray (MAXI unit shown)

1. Slide the grease tray out from where it is located underneath the grease filters of the canopy.
2. Dispose of the grease in the tray responsibly
3. Clean out the tray with a suitable cleaning solution
4. Slide the tray back into its place

Cleaning Down Visible Refresh Unit Surfaces

1. Switch **OFF** and isolate the electrical power supply.
2. Allow the stainless steel surface to cool.

WARNING:
USE SUITABLE AND APPROVED EQUIPMENT WHEN WORKING AT HEIGHT.
WARNING:
YOU SHOULD WEAR SUITABLE GRIPPING, CUT-RESISTANT WORK-GLOVES WHEN HANDLING AND CLEANING THE REFRESH UNIT.

3. Safely position suitable access equipment. Using the cloth moistened with the mild detergent, clean all surfaces.
4. Using the bucket and warm water, moisten the clean cloth and rinse all surfaces.
5. Using a clean dry soft cloth, wipe all surfaces dry.
6. Switch **ON** the electrical power supply.

Deep Cleaning the Refresh Unit

Grease can be deposited on the non-visible inside surfaces of the Refresh Unit. When allowed to build up, this can increase the risk of fire and reduce the hygiene standards of the equipment. A deep clean procedure is recommended to reduce this build-up of grease.

1. Switch **OFF** the Refresh Unit lighting
2. Switch **OFF** and isolate the electrical power supply.
3. Allow the stainless steel surfaces to cool.

WARNING:
USE SUITABLE AND APPROVED EQUIPMENT WHEN WORKING AT HEIGHT.
WARNING:
YOU SHOULD WEAR SUITABLE GRIPPING, CUT-RESISTANT WORK-GLOVES WHEN HANDLING AND CLEANING THE REFRESH UNIT.

4. Safely position suitable access equipment. Using the cloth moistened with the Acetone or the Alcohol, clean all surfaces to remove oil and grease.
5. Using the bucket and warm water, moisten the clean cloth and rinse all surfaces.
6. Using a clean dry soft cloth, wipe all surfaces dry.
7. Switch **ON** the electrical power supply.

Cleaning Stainless Steel

In general, stainless steel cleaning is carried out to restore the original surface appearance to prevent corrosion and maintain hygiene standards.

All grades of stainless steel will stain and discolour due to surface deposits and can never be accepted as completely maintenance free. In order to achieve maximum corrosion resistance, the surface of the stainless steel must be kept clean.

Refer to the following procedures in this section as necessary:

- Routine Surface Cleaning
- Cleaning Fingerprints
- Cleaning Stubborn Stains and Discolouration
- Cleaning Oil and Grease Marks
- Cleaning Corrosion
- Removing Scratches on Brush Satin Finishes.

Routine Surface Cleaning

Switch OFF and isolate the electrical power supply.
Allow the stainless steel surface to cool.

WARNING:
CLEANING AND MAINTENANCE MUST ONLY BE UNDERTAKEN BY COMPETENT PERSONNEL ONCE ALL EQUIPMENT SUCH AS OVENS, GRILLS AND FYERS ARE SWITCHED OFF AND ALL SURFACES HAVE SUFFICIENTLY COOLED.

WARNING:
USE SUITABLE AND APPROVED EQUIPMENT WHEN WORKING AT HEIGHT.

WARNING:
YOU SHOULD WEAR SUITABLE GRIPPING, CUT-RESISTANT WORK-GLOVES WHEN HANDLING AND CLEANING THE REFRESH UNIT.

1. Safely position suitable access equipment. Using the cloth moistened with the mild detergent, clean all surfaces.
2. Using the bucket and warm water, moisten the clean cloth and rinse all surfaces.
3. Using a clean dry soft cloth, wipe all surfaces dry.
4. Switch ON the electrical power supply.

Cleaning Fingerprints

1. Switch **OFF** and isolate the electrical power supply.
2. Allow the stainless steel surface to cool.

WARNING:
CLEANING AND MAINTENANCE MUST ONLY BE UNDERTAKEN BY COMPETENT PERSONNEL ONCE ALL EQUIPMENT SUCH AS OVENS, GRILLS AND FYERS ARE SWITCHED OFF AND ALL SURFACES HAVE SUFFICIENTLY COOLED.

WARNING:
USE SUITABLE AND APPROVED EQUIPMENT WHEN WORKING AT HEIGHT.

WARNING:
YOU SHOULD WEAR SUITABLE GRIPPING, CUT-RESISTANT WORK-GLOVES WHEN HANDLING AND CLEANING THE REFRESH UNIT.

3. Safely position suitable access equipment. Using the cloth and mild detergent, clean all surfaces.
4. Using the bucket and warm water, moisten the clean cloth and rinse all surfaces.

Note: An organic solvent such as Acetone and Alcohol can also be used

5. Using a clean dry soft cloth, wipe all surfaces dry.
6. Switch **ON** the electrical power supply.

Cleaning Stubborn Stains and Discolouration

1. Switch **OFF** and isolate the electrical power supply.
2. Allow the stainless steel surface to cool.

WARNING:
CLEANING AND MAINTENANCE MUST ONLY BE UNDERTAKEN BY COMPETENT PERSONNEL ONCE ALL EQUIPMENT SUCH AS OVENS, GRILLS AND FYERS ARE SWITCHED OFF AND ALL SURFACES HAVE SUFFICIENTLY COOLED.

WARNING:
USE SUITABLE AND APPROVED EQUIPMENT WHEN WORKING AT HEIGHT.
WARNING:
YOU SHOULD WEAR SUITABLE GRIPPING, CUT-RESISTANT WORK-GLOVES WHEN HANDLING AND CLEANING THE REFRESH UNIT.

3. Safely position suitable access equipment. Using the cloth moistened with the cleaning cream, clean all surfaces.
4. Using the bucket and warm water, moisten the clean cloth and rinse all surfaces.
5. Using a clean dry soft cloth, wipe all surfaces dry.
6. Switch **ON** the electrical power supply.

Cleaning Corrosion

1. Switch **OFF** and isolate the electrical power supply.
2. Allow the stainless steel surface to cool.

WARNING:
CLEANING AND MAINTENANCE MUST ONLY BE UNDERTAKEN BY COMPETENT PERSONNEL ONCE ALL EQUIPMENT SUCH AS OVENS, GRILLS AND FYERS ARE SWITCHED OFF AND ALL SURFACES HAVE SUFFICIENTLY COOLED.

WARNING:
USE SUITABLE AND APPROVED EQUIPMENT WHEN WORKING AT HEIGHT.
WARNING:
YOU MUST WEAR SUITABLE RUBBER GLOVES WHEN CLEANING WITH ANY ACID SOLUTIONS. SPECIAL PRECAUTIONS ARE NECESSARY WITH OXALIC ACID. SOLVENTS SHOULD NOT BE USED IN ENCLOSED PLACES.

3. Safely position suitable access equipment. Using the rubber gloves and the swab moistened with the oxalic acid, wet the corroded surface and allow to the acid to stand for 14 to 20 minutes.
4. Using the rubber gloves and clean warm water, wash the oxalic acid away.

WARNING:
YOU SHOULD WEAR SUITABLE GRIPPING, CUT-RESISTANT WORK-GLOVES WHEN HANDLING AND CLEANING THE REFRESH UNIT.

5. Using the cloth moistened with the cleaning cream, clean the surfaces where the oxalic acid was applied.

WARNING:
YOU SHOULD WEAR SUITABLE GRIPPING, CUT-RESISTANT WORK-GLOVES WHEN HANDLING AND CLEANING THE REFRESH UNIT.

6. Using the bucket and warm water, moisten the clean cloth and rinse the surfaces where the cleaning cream was applied.
7. Using a clean dry soft cloth, wipe the surfaces dry.
8. Switch **ON** the electrical power supply.

Removing Scratches on Brush Satin Finishes

1. Switch **OFF** and isolate the electrical power supply.
2. Allow the stainless steel surface to cool.

WARNING:
CLEANING AND MAINTENANCE MUST ONLY BE UNDERTAKEN BY COMPETENT PERSONNEL ONCE ALL EQUIPMENT SUCH AS OVENS, GRILLS AND FYERS ARE SWITCHED OFF AND ALL SURFACES HAVE SUFFICIENTLY COOLED.

WARNING:
USE SUITABLE AND APPROVED EQUIPMENT WHEN WORKING AT HEIGHT.

WARNING:

YOU SHOULD WEAR SUITABLE GRIPPING, CUT-RESISTANT WORK-GLOVES WHEN HANDLING AND CLEANING THE REFRESH UNIT.

3. Safely position suitable access equipment. Treat surface scratches as follows:

a. For light surface scratches; use the nylon pads to gently remove the scratches.

b. For deep surface scratches; use the scurf's in the direction of polishing to remove the scratches.

4. Switch **ON** the electrical power supply.

Recommended Cleaning and Maintenance Contractors

Britannia can provide a range of maintenance services, from a full maintenance contract including cleaning and replacement of filters, to individual service calls and onsite training.

Maintenance of Fire Suppression Systems (Where Installed)

Contact details of appropriate companies can be supplied if required.

Removing Stage 2 Filters

The filter is mounted horizontally within the rear section of the Services Tower.

1. Switch OFF and isolate the electrical power supply.
2. Remove the Stage 1 baffle type grease filter. The Stage 2 filter is located behind. Refer to the picture below.

Accessing the Stage 2 filter

3. Using your hand, remove the Stage 2 filter panel. Refer to the picture below.

Removing the Stage 2 filter

4. Use your fingers to unhook the securing clip from the filter panel flange. Remove the filter pad from the filter panel.
5. Dispose of the old filter pad.

Removing Stage 3 Filters

CAUTION:

The particulate filters are positioned to protect the fan and carbon filters. If they are not monitored and replaced regularly, then the life-span of the carbon filters will be drastically reduced and the fan will become grease loaded and could start to run out of balance causing long-term damage to bearings and impeller.

1. Using your hand, loosen the knurled thumbscrews located on the front access panel. Refer to the picture below.

Thumbscrew on Access Panel

2. Using your hand, open the access panel by lifting upwards until locked in position. Using your hand, remove the Stage 3 filter panel by sliding backwards. Refer to the picture below.

Sliding Back the Stage 3 Filter Panel

3. Using a commercial dishwasher, clean the pleated filter.

Removing Stage 4 Carbon Filters

CAUTION:

The particulate filters are positioned to protect the fan and carbon filters. If they are not monitored and replaced regularly, then the life-span of the carbon filters will be drastically reduced and the fan will become grease loaded and could start to run out of balance causing long-term damage to bearings and impeller.

1. Switch OFF and isolate the electrical power supply.
2. Using your hand, loosen the knurled thumbscrews located on the front access panel. Refer to the picture below.

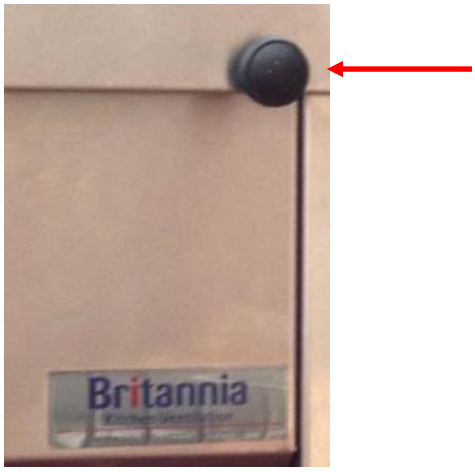

Thumbscrew on Access Panel

3. Using your hand, open the access panel by lifting upwards until locked in position. Refer to the picture below.

Stage 4 Carbon Filters Behind Access Panel

4. Remove each of the Stage 4 carbon filters by sliding the panel out horizontally between its guide rails. Refer to the picture below.

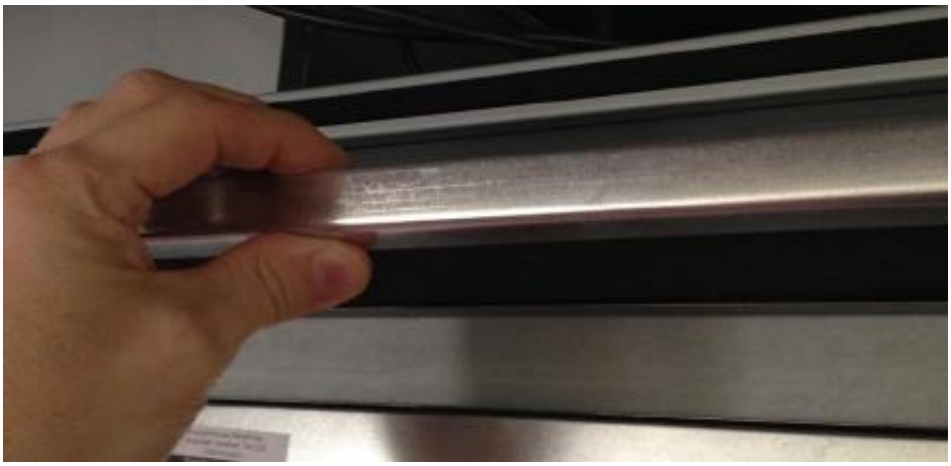

Removing Each of the Stage 4 Carbon Filters

5. Remove the carbon filters from the panel frames.
6. Dispose of the carbon filters.

Replacement Procedures

Refer to the following procedures as necessary:

- Replacing Stage 2 Filters
- Replacing Stage 3 Filters
- Replacing Stage 4 Carbon Filters

Replacing Stage 2 Filters

1. Replace the filter pad to the filter panel frame.
2. Using your fingers, lay the securing clip over the top of the new filter pad then hook the end of the securing clip under the lip of the flange of the filter panel. Refer to the picture below.

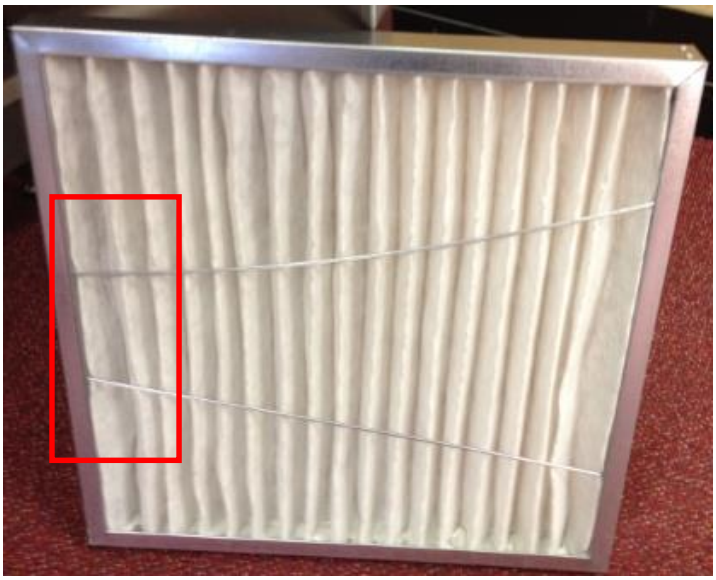

Replacing the Securing Clip over the Stage 2 Filter Pad

3. Using your hand, replace the Stage 2 filter panel. Refer to the picture below.

Stage 2 Filter Panel Replaced

4. Replace the Stage 1 baffle type grease filter. Refer to Section Cleaning Stage 1 Baffle Type Grease Filters
5. Switch **ON** the electrical power supply.
6. Reset the filter operational hours. Refer to Section 3.3 Resetting the Filter Operational Hours.
7. Check the unit is operating correctly.

Replacing Stage 3 Filters

1. Using your hand, replace each of the Stage 3 filter panels by sliding the panel in horizontally between its guide rails. Refer to the picture below.

Sliding the Stage 3 Filter Panel Forward

2. Using your hand, close the front access panel.
3. Using your hand, tighten the knurled thumbscrews located on the front access panel. Refer to the picture below.

Thumbscrew on Access Panel

4. Switch **ON** the electrical power supply.
5. Reset the filter operational hours. Refer to section resetting the Filter Operational Hours.
6. Check the unit is operating correctly.

Replacing Stage 4 Carbon Filters

1. Replace new carbon filters to the panel frames.
2. Replace each of the Stage 4 carbon filter panels by sliding the panel horizontally into the unit between its guide rails. Refer to the picture below.

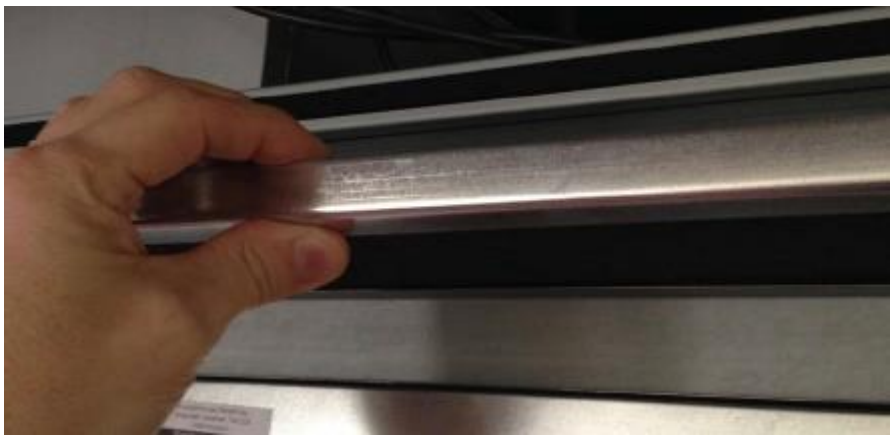

Replacing Each of the Stage 4 Carbon Filter Panels

Stage 4 Replacing the Stage 4 Filters behind Access Panel

3. Using your hand, close the front access panel.
4. Using your hand, tighten the knurled thumbscrews located on the front access panel. Refer to the picture below.

Thumbscrew on Access Panel

5. Switch **ON** the electrical power supply.
6. Reset the filter operational hours. Refer to Section Resetting the Filter Operational Hours.
7. Check the unit is operating correctly.

MAINTENANCE CHECKS AND VISUAL INSPECTIONS

The table below give a schedule of visual inspections which should be undertaken.

Equipment	Level of Output					
	Light	Light/ Medium	Medium	Medium/ High	High	Very High
	Maintenance Frequency					
Visual Inspection of the Refresh Unit (Mini, Midi & Maxi)	Monthly	Monthly	3 weekly	3 weekly	2 weekly	1 Weekly

Visual Inspection

WARNING:

USE SUITABLE AND APPROVED EQUIPMENT WHEN WORKING AT HEIGHT.

1. Allow the unit to cool down.
2. Switch **OFF** the fan motor from the switch located at the top of the unit.
3. Remove the Stage 1 baffle type grease filter. Refer to Section Cleaning Stage 1 Baffle Type Grease Filters. The Stage 2 filter is located behind. Refer to the picture below.

Accessing the Stage 2 filter

4. Using your hand, remove the Stage 2 filter panel. Refer to the picture below.

Removing the Stage 2 filter

5. Do a visual inspection of the unit as follows:
   a. Check all internal surfaces for excessive deposits of grease. Clean as necessary. Refer Section Deep Cleaning the Refresh Unit.
   b. Check all external surfaces for dust and dirt build-up. Clean as necessary. Refer to Section 4.2.3.5 Deep Cleaning the Refresh Unit.
   c. Check the unit is secure.
6. Check Stage 1 baffle type grease filters are free from dirt, dust and grease build up. Clean as necessary. Refer to Section Cleaning Stage 1 Baffle Type Grease Filters.
7. Check the condition of Stages 2 to 4 filters. If necessary, remove the filters as necessary:
   a. For removal of Stage 2 filters, refer to Section Removing Stage 2 Filters
   b. For removal of Stage 3 filters, refer to Section Removing Stage 3 Filters
   c. For removal of Stage 4 filters, refer to Section Removing Stage 4 Carbon Filters
8. Refer to the following Steps for replacing filter stages as necessary:
   a. For replacement of Stage 2 filters, refer to Section Replacing Stage 2 Filters
   b. For replacement of Stage 3 filters, refer to Section Replacing Stage 3 Filters
   c. For replacement of Stage 4 filters, refer to Section Replacing Stage 4 Carbon Filters
9. From the switch located at the top of the unit, switch ON the fan motor and check the unit is operating correctly.

WIRING DIAGRAMS
MINI & MIDI

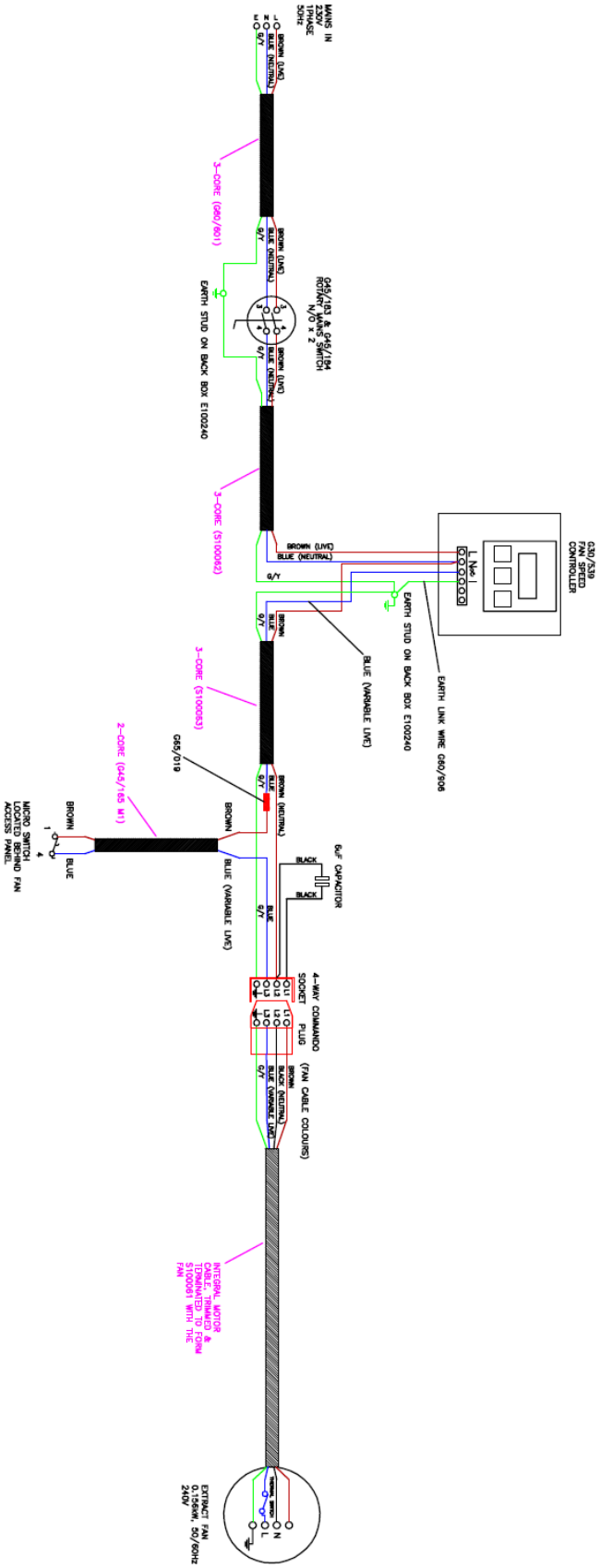

MAXI

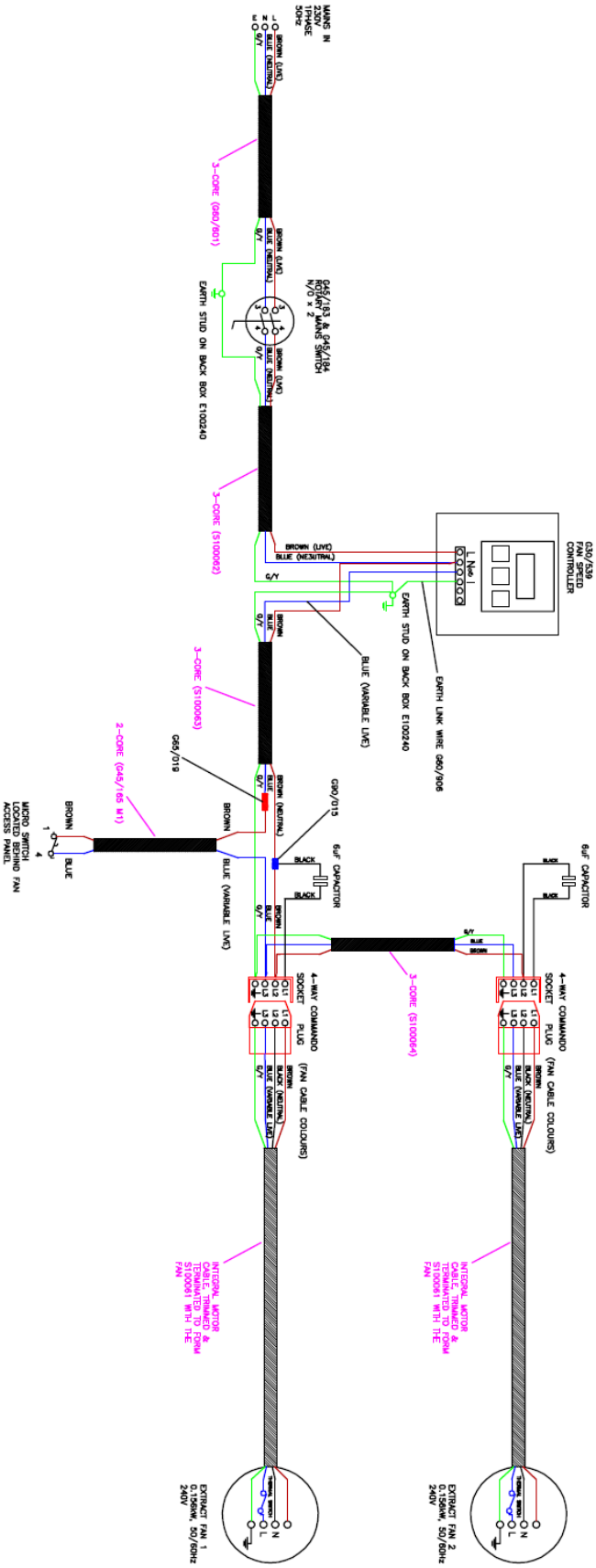
MAINS IN 230V 1PHASE 50Hz
BROWN (LIVE)
BLUE (NEUTRAL)
G/Y
3-CORE (G60/601)
G45/183 & G45/184 ROTARY MAINS SWITCH N/O x 2
EARTH STUD ON BACK BOX E100240
3-CORE (S100062)
G30/539 FAN SPEED CONTROLLER
EARTH LINK WIRE G60/906
BLUE (VARIABLE LIVE)
3-CORE (S100063)
G65/019
2-CORE (G45/165 M1)
MICRO SWITCH LOCATED BEHIND FAN ACCESS PANEL
BROWN
BLUE
G90/015
6uF CAPACITOR
BLACK
4-WAY COMMANDO SOCKET PLUG
(FAN CABLE COLOURS)
3-CORE (S100064)
INTEGRAL MOTOR CABLE TRIMMED & TERMINATED TO FORM S100061 WITH THE FAN
EXTRACT FAN 1 0.156KW, 50/60Hz 240V
EXTRACT FAN 2 0.156KW, 50/60Hz 240V

SPARES

The following replacement parts may be purchased from IMC Britannia Kitchen Ventilation when damaged or life expired for:

Nomenclature	Part No.
Stage 1 High efficiency Britstream baffle-type grease filter	**A26/005**
Stage 2 G4 filter	**A26/007**
Stage 3 HEPA filter	**A26/006**
Stage 4 Carbon filter	**A26/004**

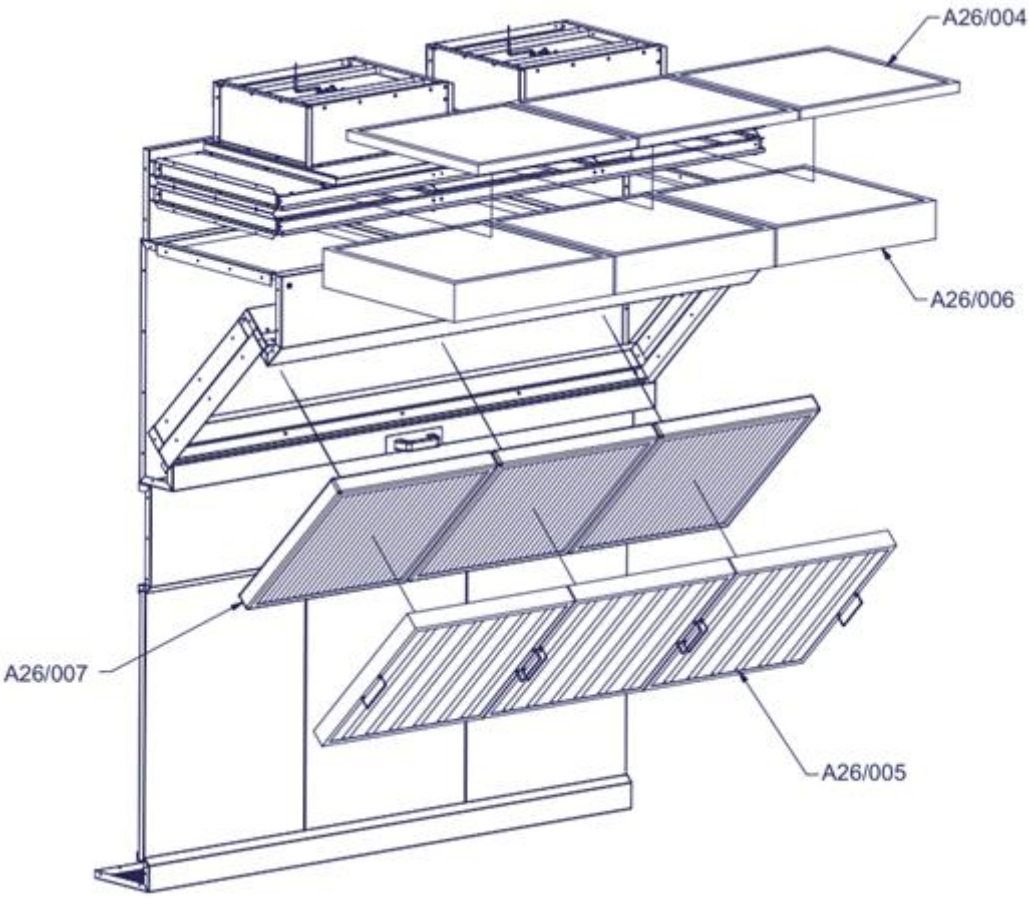

Maxi Unit Shown

ORDERING SPARE PARTS

In the event that spare parts or accessories need to be ordered, please always quote the SERIES AND SERIAL NUMBER of the machine. This is to be found on the rating plate located near the supply cable.
For installations outside the UK, please contact your supplier.

For information on IMC spares and service support (if applicable), please call IMC on +44 (0)1978 661155. Alternatively, contact us via email or fax:

IMC Spares Desk Fax: +44 (0)1978 667759
E-mail: spares@imco.co.uk

IMC Service Desk Fax: +44 (0)1978 667766
E-mail: service@imco.co.uk

Imperial Machine Company Limited
Unit 1, Abbey Road
Wrexham Industrial Estate
Wrexham
LL13 9RF

E-mail: info@imco.co.uk
Website: www.imco.co.uk

Copyright
© Britannia Kitchen Ventilation Ltd 2014. All rights reserved.
Any redistribution or reproduction of this manual, in part or entirely in any form is strictly prohibited.