Merchant Exchange
17-19 Whitworth Street West
manchester@curtins.com
Manchester
M1 5WG

T. 0161 236 2394

www.curtins.com

Drainage Planning Conditions

Subject: Land Off Elizabeth Street, Manchester

Ref: 080139/DPC Rev V02

Date: 11/04/2023

The Planning Permission Ref: 133125FO/2022
Condition 5 relates to drainage proposals for the development.

Condition 5

Notwithstanding the details submitted on the Flood Risk Assessment and Drainage Strategy stamped as received by the City Council, as Local Planning Authority, on the 4 March 2022, (a) the development shall not commence (excluding demolition and site clearance works) until a scheme for the drainage of surface water from that phase of the new development shall be submitted for approval in writing by the City Council as the Local Planning Authority. This shall include: • Detailed drainage layout including labelled components, levels and connectivity. • Details of surface water attenuation that offers a reduction in surface water runoff rate to 11 l/s. • Runoff volume in the 1 in 100-year, 6 hours rainfall shall be constrained to a value as close as is reasonably practicable to the greenfield runoff volume for the same event, but never to exceed the runoff volume from the development site prior to redevelopment. • Evidence that the drainage system has been designed (unless an area is designated to hold and/or convey water as part of the design) so that flooding does not occur during a 1 in 100-year rainfall event with allowance for 40% climate change in any part of a building. • Assessment of overland flow routes for extreme events that is diverted away from buildings (including basements). Overland flow routes need to be designed to convey the flood water in a safe manner in the event of a blockage or exceedance of the proposed drainage system capacity including inlet structures. A layout with overland flow routes needs to be presented with appreciation of these overland flow routes with regards to the properties on site and adjacent properties off site. • For sites where proposed development would cause unusual pollution risk to surface water, evidence of pollution control measures (preferably through SuDS) is required. • Hydraulic calculation of the proposed drainage system. • Construction details of flow control and SuDS elements. (b) The development shall then be constructed in accordance with the approved details, within an agreed timescale.	**Pre-Commencement**

Proposed Drainage:

The proposed drainage system consists of a separate foul and surface water network. Reference should be made to the following drainage design documents:

- 080139-CUR-XX-XX-DR-C-92500-P04_Proposed Drainage Layout
- 080139-CUR-XX-XX-DR-C-92520-P02_Typical Drainage Details Sheet 1
- 080139-CUR-XX-XX-DR-C-92521-P02_Typical Drainage Details Sheet 2
- 080139-CUR-XX-XX-DR-C-92522-P02_Typical Drainage Details Sheet 3
- 080139-CUR-XX-XX-DR-C-92550-P01_Overland Flow Routes
- Surface Water Calcs – 1, 30, 100 Year +40%cc

Merchant Exchange
17-19 Whitworth Street West
manchester@curtins.com
Manchester
M1 5WG

T. 0161 236 2394

www.curtins.com

With specific reference to the conditioned points:

Detailed drainage layout including labelled components, levels and connectivity.
Refer to the Drainage Details drawing enclosed in Appendix A.

Details of surface water attenuation that offers a reduction in surface water runoff rate to 11 l/s.
The surface water drainage has been restricted to a maximum of 11 l/s and attenuation is provided within oversized pipes and attenuation tanks. Reference should be made to the proposed Drainage Layout drawings enclosed in Appendix A and Surface Water calculations enclosed in Appendix B.

Runoff volume in the 1 in 100-year, 6 hours rainfall shall be constrained to a value as close as is reasonably practicable to the greenfield runoff volume for the same event, but never to exceed the runoff volume from the development site prior to redevelopment.
The existing greenfield run-off volume for the site is estimated at 573.7m and the proposed run-off volume is estimated as 278.9m³. Refer to the Volume calculations enclosed in Appendix C.

Evidence that the drainage system has been designed (unless an area is designated to hold and/or convey water as part of the design) so that flooding does not occur during a 1 in 100-year rainfall event with allowance for 40% climate change in any part of a building.
The system has been designed to accommodate the 100-year event with an allowance of 40% climate change. Refer to calculations enclosed in Appendix B.

Assessment of overland flow routes for extreme events that is diverted away from buildings (including basements). Overland flow routes need to be designed to convey the flood water in a safe manner in the event of a blockage or exceedance of the proposed drainage system capacity including inlet structures. A layout with overland flow routes needs to be presented with appreciation of these overland flow routes with regards to the properties on site and adjacent properties off site.
Refer to the Overland Flow Routes drawing enclosed in Appendix A.

For sites where proposed development would cause unusual pollution risk to surface water, evidence of pollution control measures (preferably through SuDS) is required.
The site is considered commercial/industrial therefore the risk of pollution is likely to be from the various vehicle movements around the site. Due to limited opportunity to include SuDS on site, it is proposed that a petrol interceptor is installed on the surface water drainage system prior to discharge into the public sewer system. The Interceptor is currently specified as a SPEL (or similar approved) Class 1 Full Retention Separator which is capable to treat up to 2.22 Ha.

Hydraulic calculation of the proposed drainage system.
Refer to calculations enclosed in Appendix B.

Construction details of flow control and SuDS elements
Refer to the Drainage Details drawing enclosed in Appendix A.

Merchant Exchange
17-19 Whitworth Street West
manchester@curtins.com
Manchester
M1 5WG

T. 0161 236 2394

www.curtins.com

Appendix A

- 080139-CUR-XX-XX-DR-C-92500-P03_Proposed Drainage Layout
- 080139-CUR-XX-XX-DR-C-92520-P01_Typical Drainage Details Sheet 1
- 080139-CUR-XX-XX-DR-C-92521-P01_Typical Drainage Details Sheet 2
- 080139-CUR-XX-XX-DR-C-92522-P01_Typical Drainage Details Sheet 3
- 080139-CUR-XX-XX-DR-C-92530-P01_Overland Flow Routes

"RESIDUAL HAZARD REGISTER (RELATES TO CIVIL/STRUCTURAL MATTERS ONLY)
MUST BE READ IN CONJUNCTION WITH CURTINS RESIDUAL HAZARD REGISTER 080139-CUR-XX-XX-HA-Z-00001.
HAZARDS THAT SHOULD BE OBVIOUS TO A COMPETENT CONTRACTOR HAVE NOT BEEN INDICATED ON THIS DRAWING.
SHOULD ANY ADDITIONAL HAZARDS BE IDENTIFIED, THE CONTRACTOR SHOULD NOTIFY ALL RELEVANT PROJECT TEAM MEMBERS."

HAZARD REGISTER

Hazard Ref.	Item (Feature, Element or Activity)	Potential Hazard Identified	Action (Information to Assist Control)
3.00 Existing Buried & Overhead Services			
3.01	Public combined sewer known to cross site. Location and depth not been confirmed.	Existing sewer could be damaged during construction activity.	Carry out additional site investigations to locate the public combined sewer.

KEY

- PROPOSED SURFACE WATER DRAINAGE
- PROPOSED FOUL WATER DRAINAGE
- PROPOSED COMBINED WATER DRAINAGE
- EXISTING PUBLIC SEWER (APPROXIMATE LOCATION)
- PROPOSED LINEAR DRAIN
- PROPOSED RAINGARDEN (TO LANDSCAPE ARCHITECTS DETAILS)
- PROPOSED FLOW CONTROL CHAMBER
- PROPOSED PRIVATE SURFACE WATER MANHOLE
- PROPOSED PRIVATE FOUL WATER MANHOLE
- PROPOSED OIL SEPARATOR
- PROPOSED ATTENUATION TANK
- OU — PROPOSED RAIN GARDEN OUTLET
- PROPOSED OIL INTERCEPTOR
- AB — LINEAR DRAINAGE ACCESS BOX
- OB — LINEAR DRAINAGE OUTLET BOX
- EXISTING UNITED UTILITIES SEWER 6m EASEMENT
- BD — BACKDROP

OTHER DISCIPLINE DRAWING REFERENCES

THE DESIGN OF THIS SCHEME HAS BEEN DESIGNED IN ACCORDANCE WITH THE BELOW DRAWINGS AND INFORMATION.

'TOPOGRAPHICAL SURVEY REF: TOPOGRAPHICAL SURVEY 'S22909-T_Rev --'. Dated September 2021.

LANDSCAPE ARCHITECTS DRAWING REF: '4018-101-REV--' BY TPM LANDSCAPE RECEIVED 01/12/21

DESIGN PHILOSOPHY

SURFACE WATER DESIGN
THE DESIGN PROVIDES CAPACITY UP TO THE 100 YEAR 40% CLIMATE CHANGE EVENT.

SW FLOW RATE:
11L/S (BASED ON EXISTING GREENFIELD RUNOFF RATE)
APPROXIMATE STORAGE REQUIREMENT: 1300M^3

OUTFALL:
25mmØ (TO BE AGREED WITH UNITED UTILITIES)

LEVELS INDICATE THAT PUMPING WILL NOT BE REQUIRED ON THE BASIS OF ACHIEVING MINIMUM GROUND LEVELS OF 55.90m AoD. TBC FOLLOWING FURTHER DESIGN OF PROPOSED LEVELS AND SURVEY WORK.

POLLUTION TREATMENT:
OIL SEPARATOR

SUSTAINABLE DRAINAGE:
RAIN GARDENS
INFILTRATION IS NOT CONSIDERED APPROPRIATE FOR THIS SCHEME.

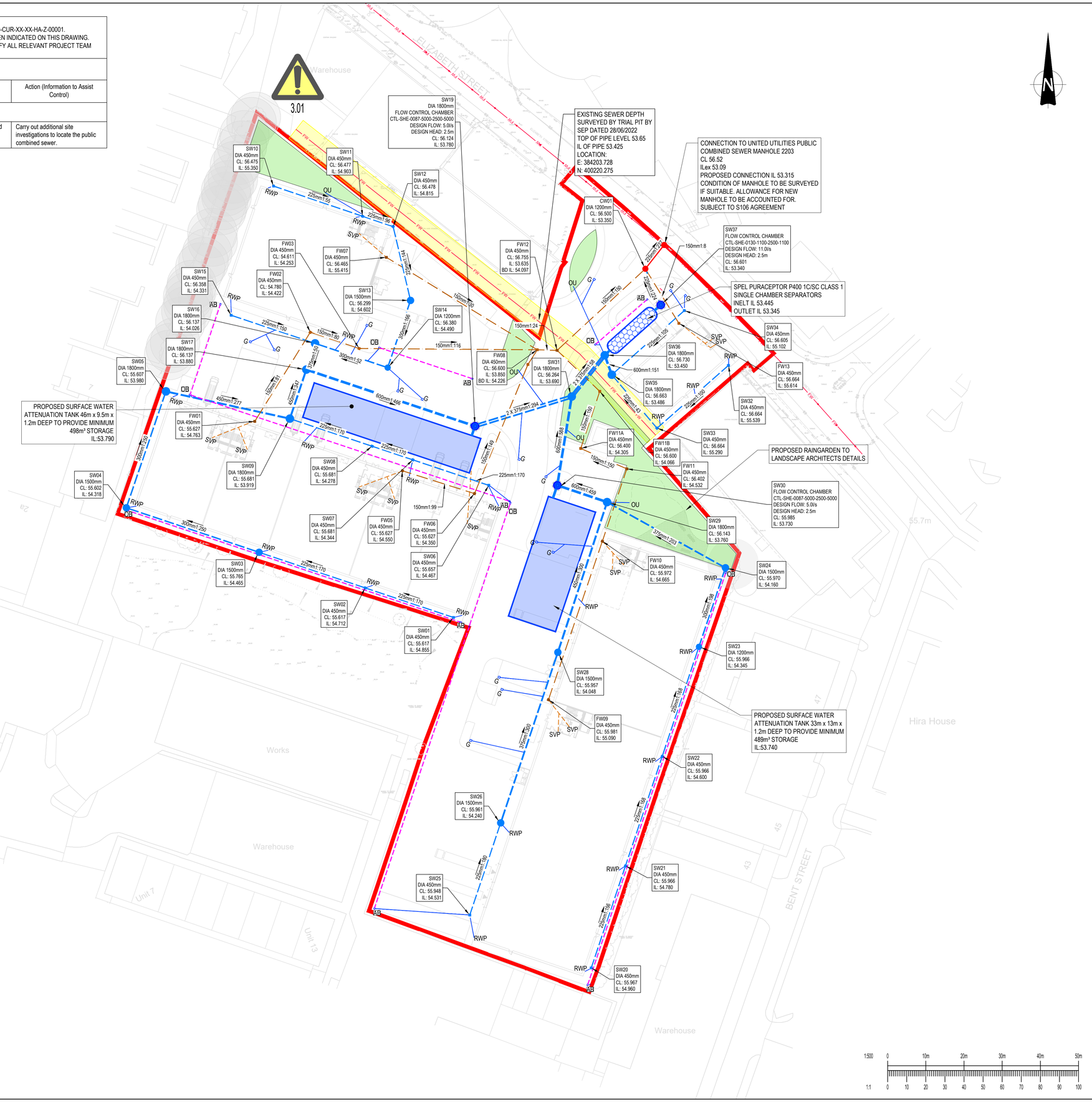

GENERAL NOTES:

1. THIS DRAWING IS TO BE READ IN CONJUNCTION WITH ALL RELEVANT ARCHITECTS AND ENGINEERS DRAWINGS AND SPECIFICATIONS.
2. DESIGN BASED ON TOPOGRAPHICAL SURVEY AND CCTV SURVEY INFORMATION AVAILABLE AT THE TIME OF DESIGN.
3. ALL DRAINAGE COVER LEVELS HAVE BEEN DESIGNED ON THE ASSUMPTION THAT THE MINIMUM PROPOSED FINISHED LEVEL IS 55.90m.
4. ALL EXISTING SEWERS, CONNECTIONS, PIPE SIZES AND INVERT LEVELS TO BE CONFIRMED BY CONTRACTOR PRIOR TO COMMENCEMENT OF WORKS TO ENSURE CONNECTIVITY. ANY VARIANCE FROM THE INFORMATION SHOWN SHOULD BE REPORTED TO THE ENGINEER FOR REVIEW.
5. DO NOT SCALE THIS DRAWING. ANY AMBIGUITIES, OMISSIONS AND ERRORS ON DRAWINGS SHALL BE BROUGHT TO THE ENGINEERS ATTENTION IMMEDIATELY. ALL DIMENSIONS MUST BE CHECKED / VERIFIED ON SITE.
6. ALL DIMENSIONS ARE IN METRES AND LEVELS IN METRES ABOVE ORDNANCE DATUM UNLESS OTHERWISE NOTED.
7. WHERE EXISTING DRAINAGE IS BEING USED, ALLOWANCES SHOULD BE MADE TO REMEDIATE THIS DRAINAGE IN LINE WITH AVAILABLE CCTV SURVEY INFORMATION. IF NO SURVEY IS AVAILABLE, IT IS ADVISED TO OBTAIN ONE PRIOR TO COMMENCEMENT OF WORKS.
8. ALL EXISTING SERVICES TO BE LOCATED PRIOR TO COMMENCEMENT OF ANY DRAINAGE WORKS, AND WHERE NECESSARY PROTECTION OR DIVERSIONS TO BE UNDERTAKEN TO AVOID CONFLICT WITH THE PROPOSED WORK.
9. ALL RAINWATER AND FOUL POP UPS LOCATIONS AND SIZES HAVE NOT BEEN INDICATED ON THIS DRAWING AND ARE TO BE CONFIRMED BY THE ARCHITECT AND M&E ENGINEER.
10. COVER LEVELS, GULLY POSITIONS, AND BUILDINGS LOCATION ARE APPROXIMATE AND SHALL BE CONFIRMED BY ARCHITECT/ LANDSCAPE ARCHITECT.
11. ALL PIPE DIAMETERS GIVEN ARE NOMINAL INTERNAL PIPE DIAMETERS. THESE ARE TO BE CONFIRMED ONCE A DETAILED CAPACITY CHECK HAS BEEN UNDERTAKEN AT A LATER DESIGN STAGE.
12. OUTFALL CONNECTION(S) SUBJECT TO AGREEMENT WITH THE APPROVING AUTHORITY.

DRAINAGE DESIGN BASED ON PREVIOUS CUT AND FILL LEVELS AND WILL REQUIRE FURTHER UPDATE ONCE FINAL CUT AND FILL/LEVELS AGREED. DRAINAGE PRINCIPALS WILL REMAIN AS SHOWN.

Rev:	Description:	Date:	By:	Chkd:
P04	TENDER ISSUE	14/10/22	ATL	CG
P03	STAGE 3 UPDATE	23/06/22	LK	CG
P02	STAGE 3 ISSUE	15/06/22	LK	CG
P01	DRAFT ISSUE FOR COMMENT	13/05/22	CS	CG

curtins
Merchant Exchange, 17-19 Whitworth Street West, Manchester, M1 5WG
0161 236 2394
manchester@curtins.com
www.curtins.com
Civils & Structures • Transport Planning • Environmental • Infrastructure • Geotechnical • Conservation & Heritage • Principal Designer
Birmingham • Bristol • Cambridge • Cardiff • Douglas • Dublin • Edinburgh • Glasgow • Kendal • Leeds • Liverpool • London • Manchester • Nottingham

Status: SUITABLE FOR INFORMATION — S2

Project: ELIZABETH STREET, CHEETHAM HILL

Drg Title: PROPOSED DRAINAGE LAYOUT

Drawn By	Designed By	Checked By
LK	LK	CG
	Date: 12/05/22	Scales @ A1: 1:500

Project No - Originator - Function - Spatial - Form - Discipline - Number: 080139 - CUR - XX - XX - D - C - 92500

Revision: P04

\\mafs02\Projects\080001-081000\080139 - Elizabeth Street, Cheetham Hill\04-Production\4A-Models\Drawings\C\CAD\92\

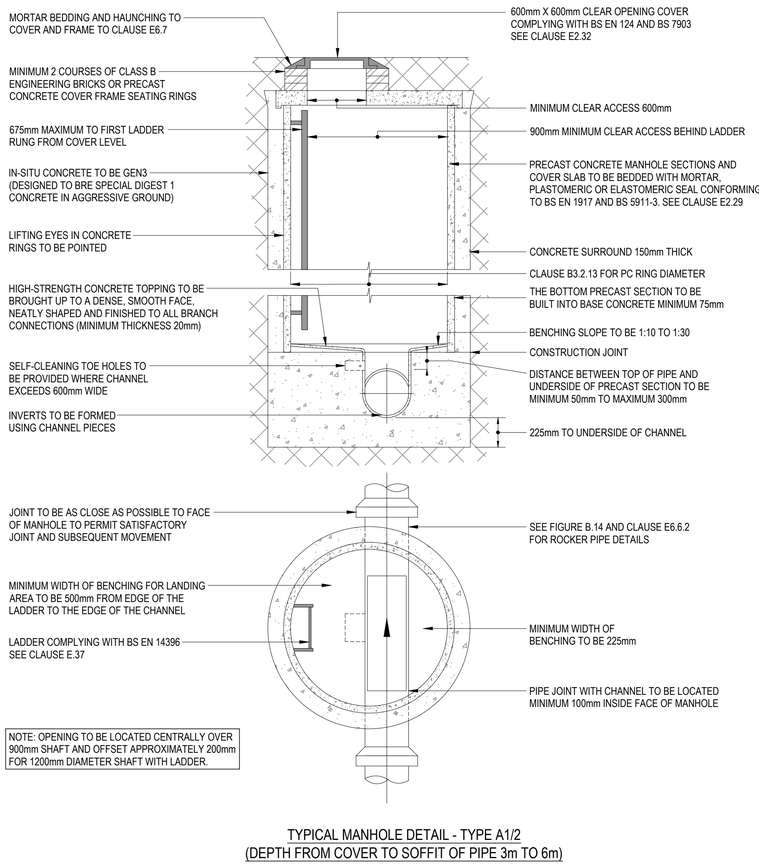

TYPICAL MANHOLE DETAIL - TYPE A1/2
(DEPTH FROM COVER TO SOFFIT OF PIPE 3m TO 6m)

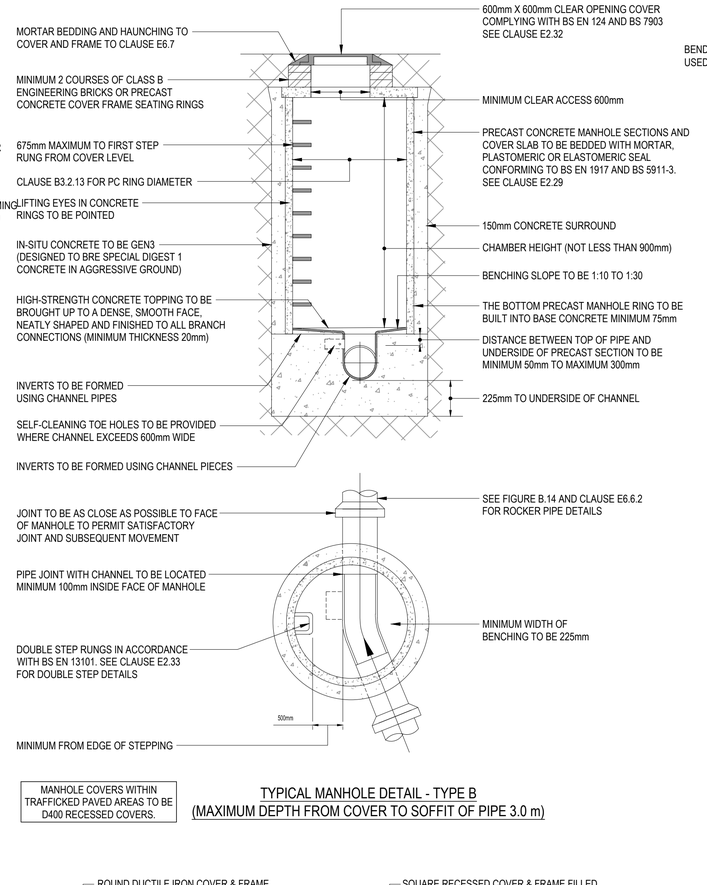

MANHOLE COVERS WITHIN TRAFFICKED PAVED AREAS TO BE D400 RECESSED COVERS.

TYPICAL MANHOLE DETAIL - TYPE B
(MAXIMUM DEPTH FROM COVER TO SOFFIT OF PIPE 3.0 m)

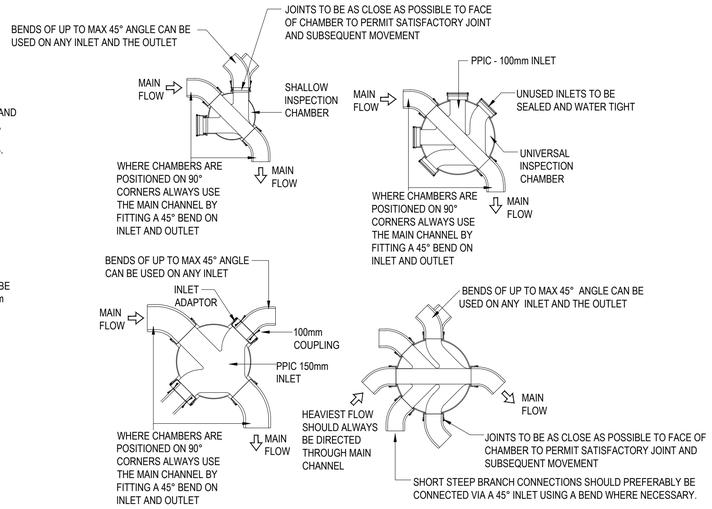

INSPECTION CHAMBER BASE DETAILS

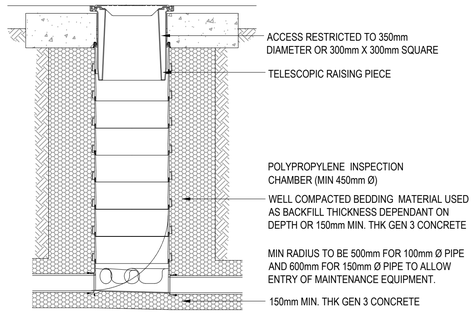

DEEP INSPECTION CHAMBER
DEPTHS BETWEEN 1.2m AND 3.0m

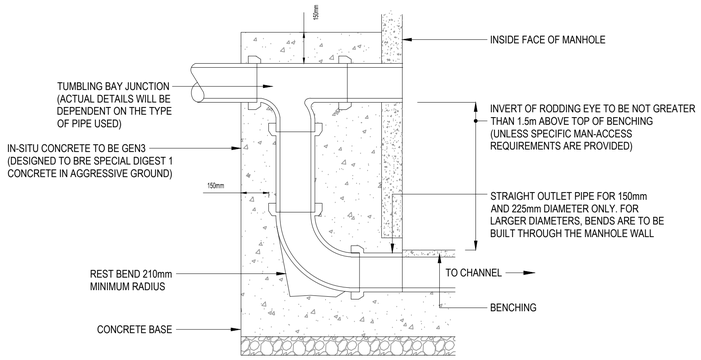

EXTERNAL VERTICAL BACKDROP

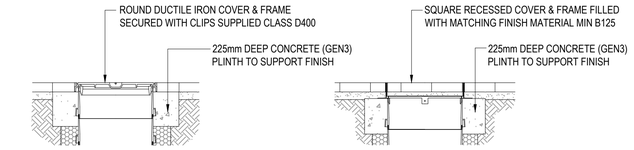

SITED IN HARD LANDSCAPED AREAS WITH STANDARD ROUND COVER

SITED IN HARD LANDSCAPED AREAS WITH RECESSED COVER

TYPICAL INSPECTION CHAMBER COVER DETAILS

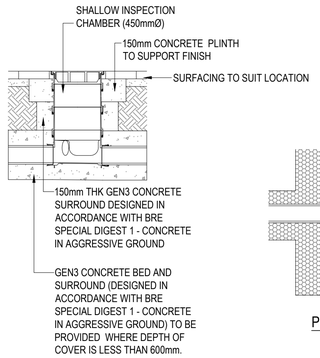

SHALLOW INSPECTION CHAMBER
MAX DEPTH 0.6m

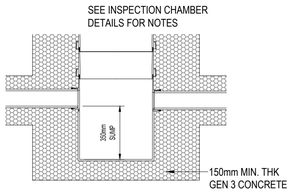

PPIC CATCHPIT BASE
DETAIL

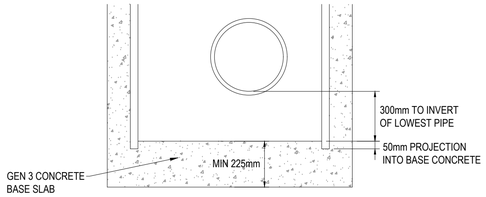

CATCH PIT DETAIL

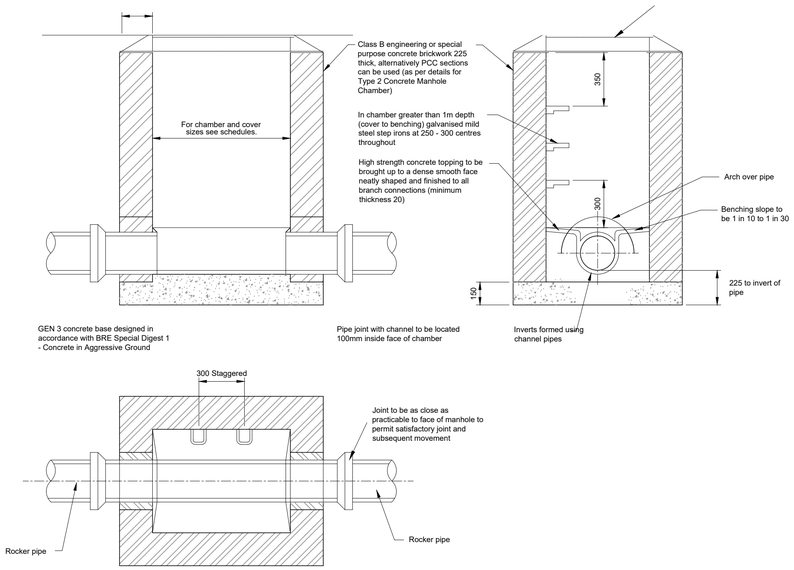

TYPICAL MANHOLE DETAIL - TYPE C
(DEPTH FROM COVER TO SOFFIT OF PIPE LESS THAN 1.5m)

GENERAL NOTES:

1. THIS DRAWING IS TO BE READ IN CONJUNCTION WITH ALL RELEVANT ARCHITECTS AND ENGINEERS DRAWINGS AND SPECIFICATIONS.
2. DO NOT SCALE THIS DRAWING. ANY AMBIGUITIES, OMISSIONS AND ERRORS ON DRAWINGS SHALL BE BROUGHT TO THE ENGINEERS ATTENTION IMMEDIATELY. ALL DIMENSIONS MUST BE CHECKED / VERIFIED ON SITE.
3. ALL DIMENSIONS ARE IN MILLIMETRES UNLESS NOTED OTHERWISE.
4. REFER TO DRAWING 080139-CUR-XX-XX-DR-C-92530_GENERAL DRAINAGE NOTES.

Rev:	Description:	Date:	By:	Chkd:
P02	TENDER ISSUE	14/10/22	ATL	CG
P01	STAGE 3 ISSUE	15/06/22	LK	CG

curtins
Merchant Exchange, 17-19 Whitworth Street West, Manchester, M1 5WG
0161 236 2394
manchester@curtins.com
www.curtins.com
Civils & Structures • Transport Planning • Environmental • Infrastructure • Geotechnical • Conservation & Heritage • Principal Designer
Birmingham • Bristol • Cambridge • Cardiff • Douglas • Dublin • Edinburgh • Glasgow • Kendal • Leeds • Liverpool • London • Manchester • Nottingham

Status: SUITABLE FOR INFORMATION **S2**

Project: ELIZABETH STREET, CHEETHAM HILL

Drg Title: TYPICAL DRAINAGE DETAILS SHEET 1

Size:	Date:	Drawn By:	Designed By:	Checked By:
A1	27/05/22	LK	CG	CG

Scale: 1:20

Project No:	Originator:	Volume:	Level:	Type:	Role:	Category / Number:	Rev:
080139	CUR	XX	XX	DR	C	92520	P02

\\mafs02\Projects\080001 - 081000\80139 - Elizabeth Street, Cheetham Hill\04-Production\M-Models-Drawings\C\CAD\92\

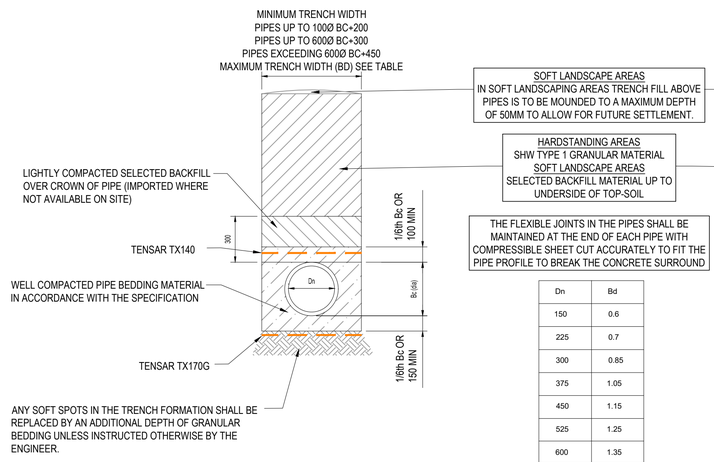

CLASS S - 360° GRANULAR SURROUND PIPE BEDDING DETAIL

Dn	Bd
150	0.6
225	0.7
300	0.85
375	1.05
450	1.15
525	1.25
600	1.35
675	1.45
750	1.50

MAXIMUM TRENCH WIDTH

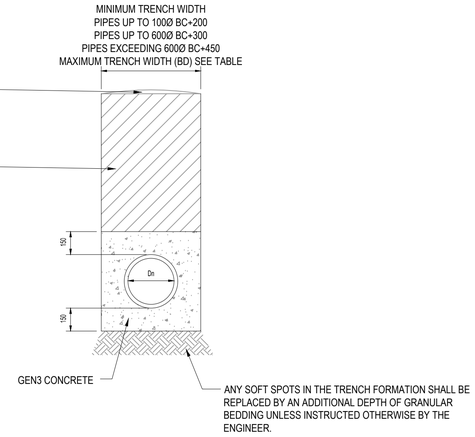

CLASS Z - CONCRETE BED AND SURROUND PIPE BEDDING DETAIL

(COVER < 900mm IN VEHICULAR LOADING AND OPEN FIELD.
COVER <600mm ELSEWHERE EXCEPT UNDER BUILDINGS.)

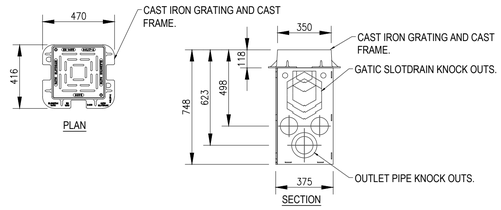

GATIC SLOTDRAIN 350mm OUTLET UNIT
SECTION AND PLAN DETAILS

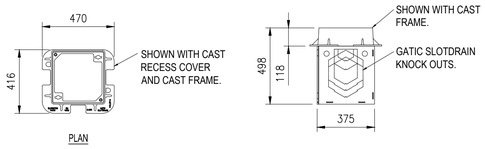

350 ACCESS BOX
SECTION AND PLAN DETAILS

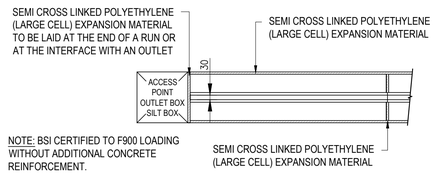

GATIC PLAN DETAIL

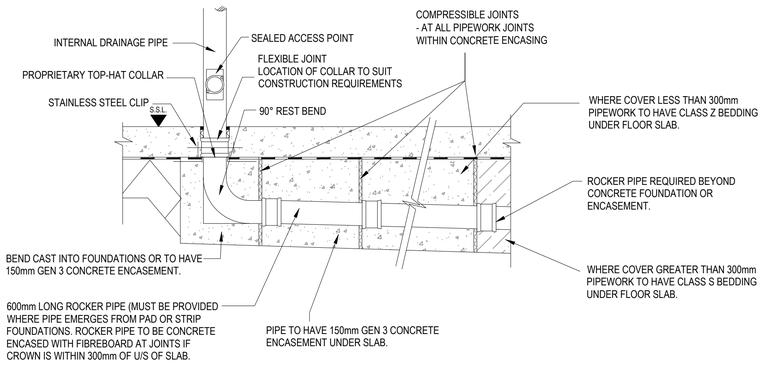

DRAINAGE UNDER BUILDINGS

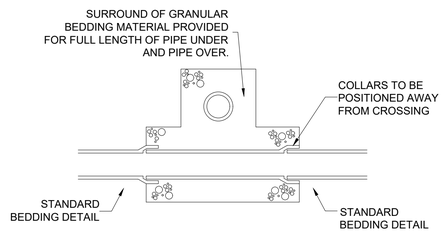

PIPE CROSSINGS DETAIL
(SCALE 1:20)

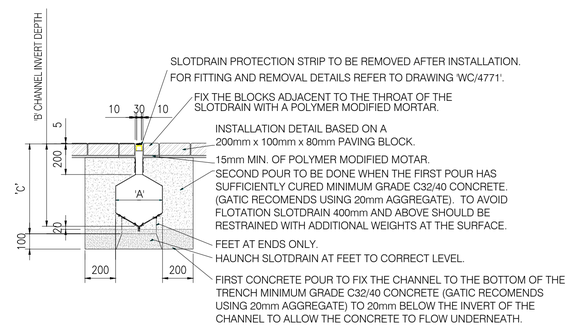

GATIC SLOTDRAIN TREADSAFE BLOCK
PAVING INSTALLATION

CASTSLOT TREADSAFE SLOTDRAIN						
WIDTH 'A'	INVERT 'B'	DEPTH 'C'	C.S.A.	3m PART No.	1m PART No.	500mm PART No.
100	308	357	9098	CAT00001	CAT00009	CAT00017
150	366	415	20325	CAT00002	CAT00010	CAT00018
225	452	501	45014	CAT00003	CAT00011	CAT00019
300	538	587	79311	CAT00004	CAT00012	CAT00020
350	596	645	107867	CAT00005	CAT00013	CAT00021
400	652	712	139608	CAT00006	CAT00014	CAT00022
500	768	828	218267	CAT00007	CAT00015	CAT00023
600	1031	1091	400705	CAT00008	CAT00016	CAT00024

FOR CHANNEL WIDTHS - SEE PLAN

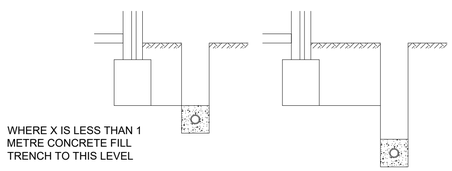

TYPICAL DETAILS WHERE
DRAINAGE TRENCH IS DEEPER
THAN FOUNDATIONS
(SCALE 1:20)

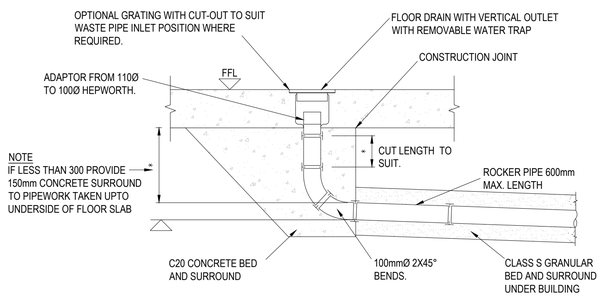

INTERNAL FLOOR DRAIN

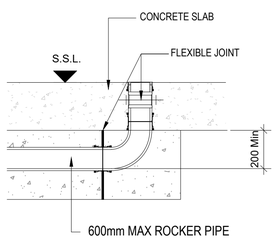

TYPICAL SECTION THROUGH SLAB
(100mmØ downpipe)

GENERAL NOTES:

1. THIS DRAWING IS TO BE READ IN CONJUNCTION WITH ALL RELEVANT ARCHITECTS AND ENGINEERS DRAWINGS AND SPECIFICATIONS.
2. DO NOT SCALE THIS DRAWING. ANY AMBIGUITIES, OMISSIONS AND ERRORS ON DRAWINGS SHALL BE BROUGHT TO THE ENGINEERS ATTENTION IMMEDIATELY. ALL DIMENSIONS MUST BE CHECKED / VERIFIED ON SITE.
3. ALL DIMENSIONS ARE IN MILLIMETRES UNLESS NOTED OTHERWISE.
4. REFER TO DRAWING 080139-CUR-XX-XX-DR-C-92530_GENERAL DRAINAGE NOTES.

Rev:	Description:	Date:	By:	Chkd:
P02	TENDER ISSUE	14/10/22	ATL	CG
P01	STAGE 3 ISSUE	15/06/22	LK	CG

curtins
Merchant Exchange, 17-19 Whitworth Street West, Manchester, M1 5WG
0161 236 2394
manchester@curtins.com
www.curtins.com
Civils & Structures • Transport Planning • Environmental • Infrastructure • Geotechnical • Conservation & Heritage • Principal Designer
Birmingham • Bristol • Cambridge • Cardiff • Douglas • Dublin • Edinburgh • Glasgow • Kendal • Leeds • Liverpool • London • Manchester • Nottingham

Status: SUITABLE FOR INFORMATION S2

Project: ELIZABETH STREET, CHEETHAM HILL

Drg Title: TYPICAL DRAINAGE DETAILS SHEET 2

Size:	Date:	Drawn By:	Designed By:	Checked By:
A1	27/05/22	LK	CG	CG
Scale: 1:20				

Project No:	Originator:	Volume:	Level:	Type:	Role:	Category / Number:	Rev:
080139	CUR	XX	XX	DR	C	92521	P02

\\mafs02\Projects\080001 - 081000\080139 - Elizabeth Street, Cheetham Hill\04-Production\4A-Models-Drawings\C\CAD\92\

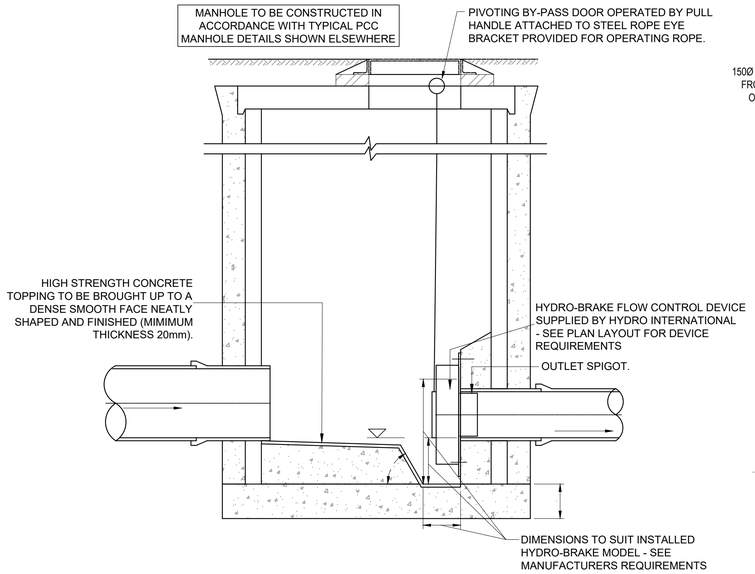

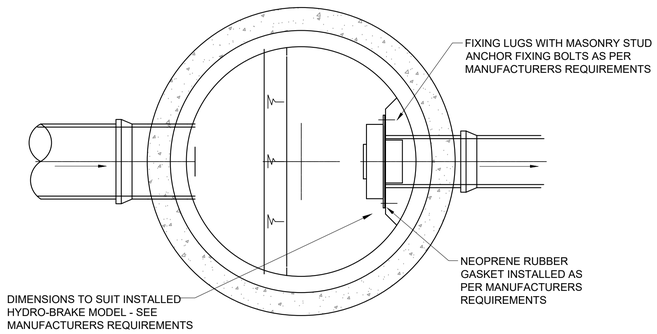

TYPICAL HYDROBRAKE MANHOLE DETAIL

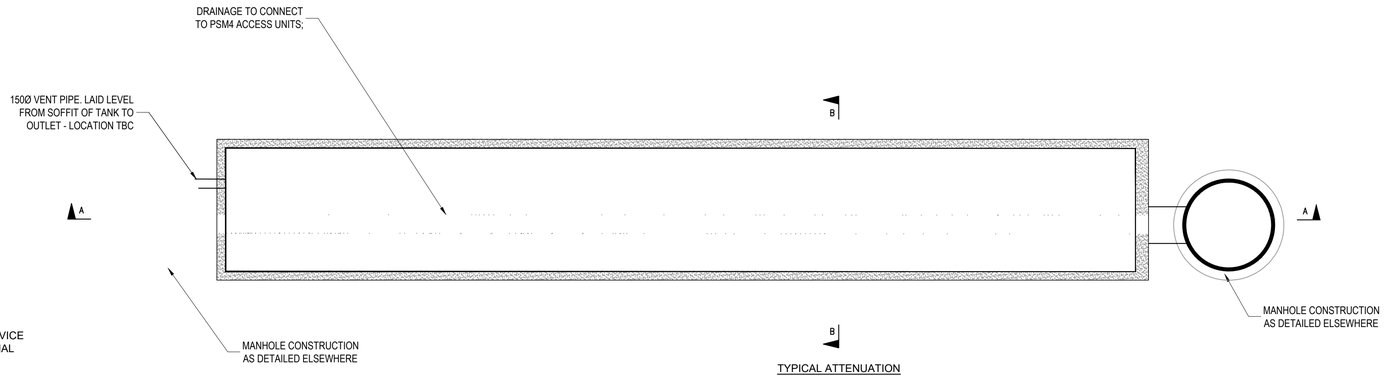

TYPICAL ATTENUATION TANK PLAN

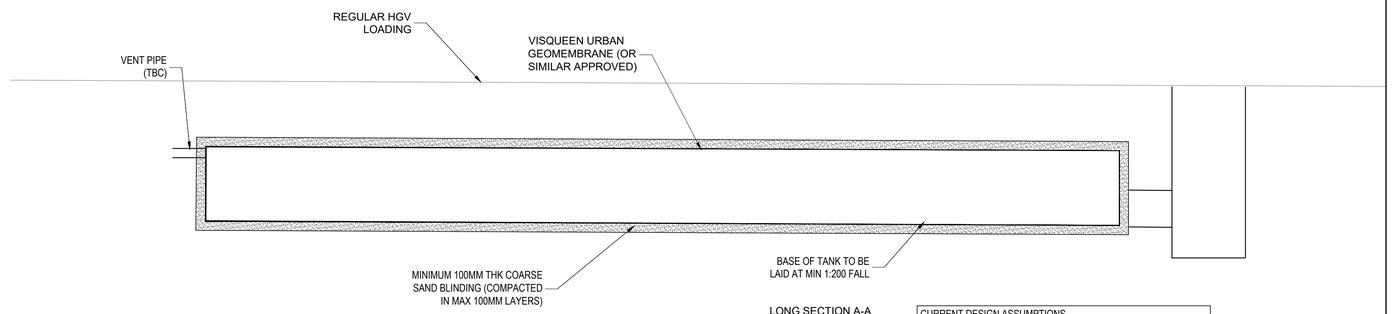

LONG SECTION A-A

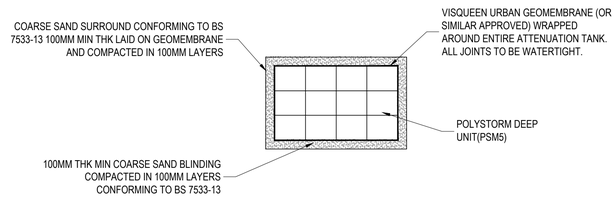

CURRENT DESIGN ASSUMPTIONS

DESIGN BASED POLYSTORM DEEP (PSM5) UNIT 1000x500x400(D) WITH BASED ON
- APPROX. MAXIMUM BURIAL DEPTH OF 2.4m.
- APPROX. MINIMUM COVER DEPTH OF 0.6m.

THE TANKS ARE LOCATED AN AREAS SUBJECT TO REGULAR HGV LOADING. DETAILED STRUCTURAL CALCULATIONS REQUIRED TO PROVE TANK HAS SUFFICIENT STRENGTH.

FLOATATION CALCULATIONS WILL ALSO BE REQUIRED.

THE MANUFACTURER WILL NEED TO CONFIRM THAT THE TANK HAS SUFFICIENT STRENGTH FOR THIS LOCATION IN ACCORDANCE WITH CIRIA C680.

FOR SIZES OF TANKS & INLET LEVELS/ LOCATIONS REFER TO DRAWING 080139-CUR-XX-XX-DR-C-92500

TANKS ARE OFFLINE -ACCESS REQUIREMENTS FOR INSPECTION/ MAINTENANCE TBC BY MANUFACTURER.

IMPERMEABLE MEMBRANE, BED AND SURROUND TO BE CONFIRMED WITH THE MANUFACTURER.

GENERAL NOTES:

1. THIS DRAWING IS TO BE READ IN CONJUNCTION WITH ALL RELEVANT ARCHITECTS AND ENGINEERS DRAWINGS AND SPECIFICATIONS.
2. DO NOT SCALE THIS DRAWING. ANY AMBIGUITIES, OMISSIONS AND ERRORS ON DRAWINGS SHALL BE BROUGHT TO THE ENGINEERS ATTENTION IMMEDIATELY. ALL DIMENSIONS MUST BE CHECKED / VERIFIED ON SITE.
3. ALL DIMENSIONS ARE IN MILLIMETRES UNLESS NOTED OTHERWISE.
4. REFER TO DRAWING 080139-CUR-XX-XX-DR-C-92530_GENERAL DRAINAGE NOTES.

Rev:	Description:	Date:	By:	Chkd:
P02	TENDER ISSUE	14/10/22	ATL	CG
P01	STAGE 3 ISSUE	15/06/22	LK	CG

curtins
Merchant Exchange, 17-19 Whitworth Street West, Manchester, M1 5WG
0161 236 2394
manchester@curtins.com
www.curtins.com
Civils & Structures • Transport Planning • Environmental • Infrastructure • Geotechnical • Conservation & Heritage • Principal Designer
Birmingham • Bristol • Cambridge • Cardiff • Douglas • Dublin • Edinburgh • Glasgow • Kendal • Leeds • Liverpool • London • Manchester • Nottingham

Status: SUITABLE FOR INFORMATION S2

Project: ELIZABETH STREET, CHEETHAM HILL

Drg Title: TYPICAL DRAINAGE DETAILS SHEET 3

Size:	Date:	Drawn By:	Designed By:	Checked By:
A1	27/05/22	LK	CG	CG
Scale: 1:20				

Project No: Originator: Volume: Level: Type: Role: Category / Number: Rev:

080139 - CUR - XX - XX - DR - C - 92522 - P02

\\mafs02\Projects\080001 - 081000\080139 - Elizabeth Street, Cheetham Hill\04-Production\4A-Models-Drawings\C\CAD\92\

OTHER DISCIPLINE DRAWING REFERENCES

THE DESIGN OF THIS SCHEME HAS BEEN DESIGNED IN ACCORDANCE WITH THE BELOW DRAWINGS AND INFORMATION.

'TOPOGRAPHICAL SURVEY REF: TOPOGRAPHICAL SURVEY 'S22909-T_Rev --'. Dated September 2021.

LANDSCAPE ARCHITECTS DRAWING REF: '4018-101-REV--' BY TPM LANDSCAPE RECEIVED 01/12/22

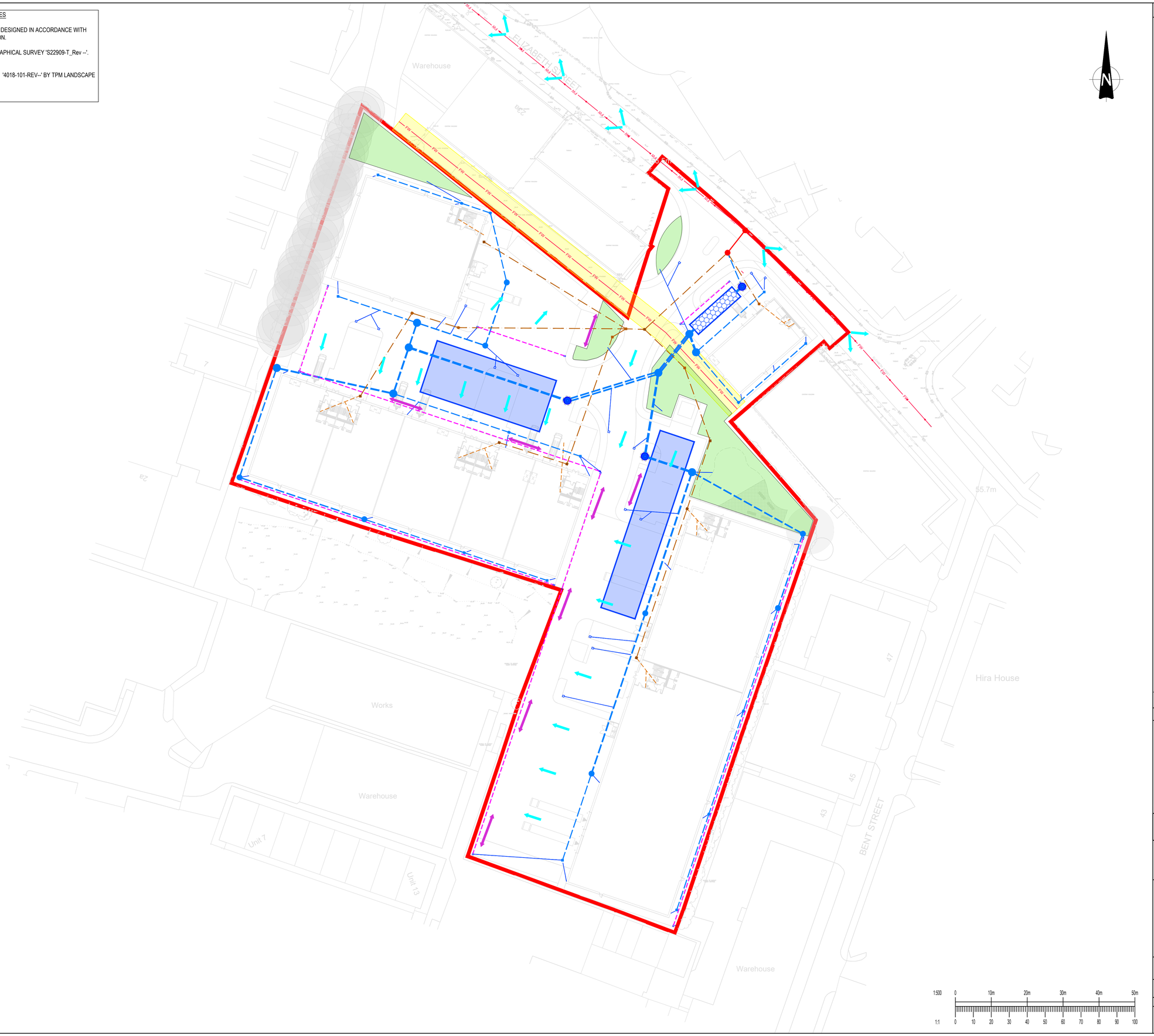

GENERAL NOTES:

1. THIS DRAWING IS TO BE READ IN CONJUNCTION WITH ALL RELEVANT ARCHITECTS AND ENGINEERS DRAWINGS AND SPECIFICATIONS.
2. DO NOT SCALE THIS DRAWING. ANY AMBIGUITIES, OMISSIONS AND ERRORS ON DRAWINGS SHALL BE BROUGHT TO THE ENGINEERS ATTENTION IMMEDIATELY. ALL DIMENSIONS MUST BE CHECKED / VERIFIED ON SITE.
3. ALL DIMENSIONS ARE IN METRES UNLESS NOTED OTHERWISE.

KEY

INDICATES THE FLOW ROUTE BASED ON FULL INLET CAPACITY OF COMPONENTS . i.e FALLS AT SURFACE

INDICATES THE GENERAL GROUND LEVEL FALLS TO THE DRAINAGE SYSTEM

GROUND LEVELS TO FALL AWAY FROM THE PROPOSED BUILDING

Rev:	Description:	Date:	By:	Chkd:
P01	ISSUED FOR INFORMATION	11/04/22	CS	CG

curtins
Merchant Exchange, 17-19 Whitworth Street West, Manchester, M1 5WG
0161 236 2394
manchester@curtins.com
www.curtins.com
Civils & Structures • Transport Planning • Environmental • Infrastructure • Geotechnical • Conservation & Heritage • Principal Designer
Birmingham • Bristol • Cambridge • Cardiff • Douglas • Dublin • Edinburgh • Glasgow • Kendal • Leeds • Liverpool • London • Manchester • Nottingham

Status: SUITABLE FOR INFORMATION S2

Project: ELIZABETH STREET, CHEETHAM HILL

Drg Title: OVERLAND FLOW ROUTES PLAN

Drawn By	Designed By	Checked By
LK	LK	CG
	Date 12/05/22	Scales @ A1 1:500

Project No - Originator - Function - Spatial - Form - Discipline - Number	Revision
080139 - CUR - XX - XX - D - C - 92550	P01

\\mafs02\Projects\080001 - 081000\080139 - Elizabeth Street, Cheetham Hill\04-Production\4A-Models\Drawings\CAD\92\

Merchant Exchange
17-19 Whitworth Street West
manchester@curtins.com
Manchester
M1 5WG

T. 0161 236 2394

www.curtins.com

Appendix B

- Surface Water Calcs – 1, 30, 100 Year +40%cc

Design Settings

Rainfall Methodology	FSR	Maximum Time of Concentration (mins)	30.00
Return Period (years)	100	Maximum Rainfall (mm/hr)	50.0
Additional Flow (%)	0	Minimum Velocity (m/s)	1.00
FSR Region	England and Wales	Connection Type	Level Soffits
M5-60 (mm)	17.000	Minimum Backdrop Height (m)	0.200
Ratio-R	0.400	Preferred Cover Depth (m)	1.200
CV	0.750	Include Intermediate Ground	✓
Time of Entry (mins)	5.00	Enforce best practice design rules	✓

Pipeline Schedule

Link	Length (m)	Slope (1:X)	Dia (mm)	Link Type	US CL (m)	US IL (m)	US Depth (m)	DS CL (m)	DS IL (m)	DS Depth (m)
1.000	24.368	170.0	225	Circular	55.681	54.856	0.600	55.573	54.713	0.635
1.001	29.336	170.0	225	Circular	55.573	54.713	0.635	55.417	54.540	0.652
1.002	36.674	240.0	300	Circular	55.417	54.465	0.652	55.402	54.312	0.790
1.003	35.725	111.3	300	Circular	55.402	54.312	0.790	54.925	53.991	0.634
1.004	33.213	450.0	450	Circular	54.925	53.841	0.634	55.681	53.767	1.464
2.000	28.161	150.0	225	Circular	55.675	54.250	1.200	55.681	54.062	1.394
2.001	12.649	150.0	225	Circular	55.681	54.062	1.394	55.681	53.978	1.478
2.002	22.715	372.4	225	Circular	55.681	53.978	1.478	55.681	53.917	1.539
1.005	13.549	451.6	450	Circular	55.681	53.767	1.464	56.055	53.737	1.868
3.000	24.609	55.0	225	Circular	56.478	55.350	0.903	56.477	54.903	1.349
3.001	8.464	55.0	225	Circular	56.477	54.903	1.349	56.478	54.749	1.504
3.002	19.835	55.0	225	Circular	56.478	54.749	1.504	56.299	54.388	1.686
3.003	18.568	55.0	300	Circular	56.299	54.388	1.611	56.360	54.050	2.010
3.004	20.110	139.7	300	Circular	56.360	54.050	2.010	56.363	53.906	2.157
4.000	23.104	46.8	225	Circular	56.358	54.475	1.658	56.363	53.981	2.157
3.005	7.224	380.2	375	Circular	56.363	53.831	2.157	56.055	53.812	1.868
1.006	25.436	446.2	600	Circular	56.055	53.587	1.868	55.600	53.530	1.470
1.007	21.163	814.0	525	Circular	55.600	53.530	1.545	56.020	53.504	1.991
1.008	26.497	602.2	600	Circular	56.020	53.504	1.916	56.264	53.460	2.204

Link	US Node	Dia (mm)	Node Type	MH Type	DS Node	Dia (mm)	Node Type	MH Type
1.000	1	450	Manhole	Adoptable	2	450	Manhole	Adoptable
1.001	2	450	Manhole	Adoptable	3	1200	Manhole	Adoptable
1.002	3	1200	Manhole	Adoptable	4	1200	Manhole	Adoptable
1.003	4	1200	Manhole	Adoptable	5	1200	Manhole	Adoptable
1.004	5	1200	Manhole	Adoptable	9	1200	Manhole	Adoptable
2.000	6	450	Manhole	Adoptable	7	450	Manhole	Adoptable
2.001	7	450	Manhole	Adoptable	8	450	Manhole	Adoptable
2.002	8	450	Manhole	Adoptable	9	1200	Manhole	Adoptable
1.005	9	1200	Manhole	Adoptable	17	1500	Manhole	Adoptable
3.000	10	450	Manhole	Adoptable	11	450	Manhole	Adoptable
3.001	11	450	Manhole	Adoptable	12	450	Manhole	Adoptable
3.002	12	450	Manhole	Adoptable	13	1200	Manhole	Adoptable
3.003	13	1200	Manhole	Adoptable	14	1200	Manhole	Adoptable
3.004	14	1200	Manhole	Adoptable	16	1200	Manhole	Adoptable
4.000	15	450	Manhole	Adoptable	16	1200	Manhole	Adoptable
3.005	16	1200	Manhole	Adoptable	17	1500	Manhole	Adoptable
1.006	17	1500	Manhole	Adoptable	18	1500	Manhole	Adoptable
1.007	18	1500	Manhole	Adoptable	19	1500	Manhole	Adoptable
1.008	19	1500	Manhole	Adoptable	32	1500	Manhole	Adoptable

Flow+ v10.2 Copyright © 1988-2022 Causeway Technologies Ltd

Pipeline Schedule

Link	Length (m)	Slope (1:X)	Dia (mm)	Link Type	US CL (m)	US IL (m)	US Depth (m)	DS CL (m)	DS IL (m)	DS Depth (m)
5.000	28.472	142.0	225	Circular	55.967	54.842	0.900	55.966	54.641	1.100
5.001	30.259	142.0	225	Circular	55.966	54.641	1.100	55.966	54.428	1.313
5.002	30.255	142.0	225	Circular	55.966	54.428	1.313	55.966	54.215	1.526
5.003	21.768	142.0	300	Circular	55.966	54.140	1.526	55.970	53.987	1.683
5.004	35.173	108.6	375	Circular	55.970	53.987	1.608	56.136	53.663	2.098
6.000	25.434	180.0	225	Circular	55.933	54.508	1.200	55.935	54.367	1.343
6.001	47.100	180.0	375	Circular	55.935	54.217	1.343	55.935	53.955	1.605
6.002	41.400	141.8	450	Circular	55.935	53.880	1.605	56.136	53.588	2.098
5.005	5.917	845.3	525	Circular	56.136	53.513	2.098	56.136	53.506	2.105
5.006	7.989	798.9	525	Circular	56.136	53.506	2.105	55.891	53.496	1.870
5.007	21.514	597.6	600	Circular	55.891	53.496	1.795	56.264	53.460	2.204
1.009	25.022	595.8	600	Circular	56.264	53.460	2.204	56.606	53.418	2.588
7.000	24.905	225.0	225	Circular	56.664	55.102	1.337	56.664	54.991	1.448
7.001	18.473	225.0	225	Circular	56.664	54.991	1.448	56.663	54.909	1.529
8.000	25.240	131.5	225	Circular	56.605	55.102	1.278	56.663	54.910	1.528
7.002	20.130	296.0	600	Circular	56.663	53.486	2.577	56.606	53.418	2.588
1.010	25.604	226.6	225	Circular	56.606	53.418	2.963	56.510	53.305	2.980

Link	US Node	Dia (mm)	Node Type	MH Type	DS Node	Dia (mm)	Node Type	MH Type
5.000	20	450	Manhole	Adoptable	21	450	Manhole	Adoptable
5.001	21	450	Manhole	Adoptable	22	450	Manhole	Adoptable
5.002	22	450	Manhole	Adoptable	23	1200	Manhole	Adoptable
5.003	23	1200	Manhole	Adoptable	24	1200	Manhole	Adoptable
5.004	24	1200	Manhole	Adoptable	29	1500	Manhole	Adoptable
6.000	25	1200	Manhole	Adoptable	26	1200	Manhole	Adoptable
6.001	26	1200	Manhole	Adoptable	28	1350	Manhole	Adoptable
6.002	28	1350	Manhole	Adoptable	29	1500	Manhole	Adoptable
5.005	29	1500	Manhole	Adoptable	30	1500	Manhole	Adoptable
5.006	30	1500	Manhole	Adoptable	31	1500	Manhole	Adoptable
5.007	31	1500	Manhole	Adoptable	32	1500	Manhole	Adoptable
1.009	32	1500	Manhole	Adoptable	37	1500	Manhole	Adoptable
7.000	33	450	Manhole	Adoptable	34	450	Manhole	Adoptable
7.001	34	450	Manhole	Adoptable	36	1200	Manhole	Adoptable
8.000	35	450	Manhole	Adoptable	36	1200	Manhole	Adoptable
7.002	36	1200	Manhole	Adoptable	37	1500	Manhole	Adoptable
1.010	37	1500	Manhole	Adoptable	38_OUT	1500	Manhole	Adoptable

Node 19 Online Hydro-Brake® Control

Flap Valve	x	Objective	(HE) Minimise upstream storage
Replaces Downstream Link	x	Sump Available	✓
Invert Level (m)	53.504	Product Number	CTL-SHE-0087-5000-2500-5000
Design Depth (m)	2.500	Min Outlet Diameter (m)	0.100
Design Flow (l/s)	5.0	Min Node Diameter (mm)	1200

Node 37 Online Hydro-Brake® Control

Flap Valve	x	Design Flow (l/s)	11.0
Downstream Link	1.010	Objective	(HE) Minimise upstream storage
Replaces Downstream Link	x	Sump Available	✓
Invert Level (m)	53.418	Product Number	CTL-SHE-0130-1100-2500-1100
Design Depth (m)	2.500	Min Outlet Diameter (m)	0.150

Flow+ v10.2 Copyright © 1988-2022 Causeway Technologies Ltd

Node 37 Online Hydro-Brake® Control

Min Node Diameter (mm)	1500

Node 31 Online Hydro-Brake® Control

Flap Valve	x	Objective	(HE) Minimise upstream storage
Downstream Link	5.007	Sump Available	✓
Replaces Downstream Link	x	Product Number	CTL-SHE-0087-5000-2500-5000
Invert Level (m)	53.496	Min Outlet Diameter (m)	0.100
Design Depth (m)	2.500	Min Node Diameter (mm)	1200
Design Flow (l/s)	5.0		

Node 30 Depth/Area Storage Structure

Base Inf Coefficient (m/hr)	0.00000	Safety Factor	2.0	Invert Level (m)	53.506
Side Inf Coefficient (m/hr)	0.00000	Porosity	0.95	Time to half empty (mins)	

Depth (m)	Area (m²)	Inf Area (m²)	Depth (m)	Area (m²)	Inf Area (m²)	Depth (m)	Area (m²)	Inf Area (m²)
0.000	640.0	0.0	0.800	640.0	0.0	0.801	0.0	0.0

Node 18 Depth/Area Storage Structure

Base Inf Coefficient (m/hr)	0.00000	Safety Factor	2.0	Invert Level (m)	53.530
Side Inf Coefficient (m/hr)	0.00000	Porosity	0.95	Time to half empty (mins)	

Depth (m)	Area (m²)	Inf Area (m²)	Depth (m)	Area (m²)	Inf Area (m²)	Depth (m)	Area (m²)	Inf Area (m²)
0.000	505.4	0.0	1.000	504.4	0.0	1.001	0.0	0.0

Flow+ v10.2 Copyright © 1988-2022 Causeway Technologies Ltd

Results for 1 year Critical Storm Duration. Lowest mass balance: 99.80%

Node Event	US Node	Peak (mins)	Level (m)	Depth (m)	Inflow (l/s)	Node Vol (m³)	Flood (m³)	Status
15 minute winter	1	10	54.911	0.055	5.4	0.0688	0.0000	OK
15 minute winter	2	11	54.797	0.084	11.7	0.1192	0.0000	OK
15 minute winter	3	11	54.546	0.081	11.4	0.0917	0.0000	OK
15 minute winter	4	11	54.401	0.089	19.8	0.2234	0.0000	OK
15 minute winter	5	11	54.081	0.240	33.1	0.8085	0.0000	OK
15 minute winter	6	10	54.320	0.070	9.1	0.0854	0.0000	OK
15 minute winter	7	10	54.164	0.102	15.8	0.0891	0.0000	OK
15 minute winter	8	11	54.112	0.134	15.6	0.0214	0.0000	OK
15 minute winter	9	10	54.064	0.297	64.7	0.6055	0.0000	OK
15 minute winter	10	10	55.400	0.050	7.9	0.0670	0.0000	OK
15 minute winter	11	10	54.974	0.071	13.4	0.0540	0.0000	OK
15 minute winter	12	10	54.816	0.067	13.2	0.0106	0.0000	OK
15 minute winter	13	10	54.464	0.076	21.7	0.1432	0.0000	OK
15 minute winter	14	10	54.169	0.119	28.7	0.1980	0.0000	OK
15 minute winter	15	10	54.514	0.039	5.1	0.0241	0.0000	OK
15 minute summer	16	11	54.061	0.230	36.8	0.3385	0.0000	OK
15 minute winter	17	10	54.053	0.466	134.9	0.8241	0.0000	OK
480 minute winter	18	368	53.724	0.194	12.3	93.6311	0.0000	OK
480 minute winter	19	368	53.724	0.220	3.0	0.3892	0.0000	OK
15 minute winter	20	10	54.903	0.061	7.3	0.0761	0.0000	OK
15 minute winter	21	10	54.727	0.086	13.7	0.0853	0.0000	OK
15 minute winter	22	11	54.538	0.110	19.9	0.0962	0.0000	OK
15 minute winter	23	11	54.252	0.112	25.4	0.1889	0.0000	OK
15 minute winter	24	11	54.078	0.091	25.5	0.1026	0.0000	OK
15 minute winter	25	10	54.616	0.108	17.4	0.3431	0.0000	OK

Link Event (Upstream Depth)	US Node	Link	DS Node	Outflow (l/s)	Velocity (m/s)	Flow/Cap	Link Vol (m³)	Discharge Vol (m³)
15 minute winter	1	1.000	2	5.3	0.512	0.133	0.2545	
15 minute winter	2	1.001	3	11.4	0.859	0.287	0.3896	
15 minute winter	3	1.002	4	11.4	0.693	0.159	0.6023	
15 minute winter	4	1.003	5	19.5	1.131	0.186	0.6317	
15 minute winter	5	1.004	9	41.0	0.619	0.271	3.1778	
15 minute winter	6	2.000	7	8.9	0.644	0.211	0.3922	
15 minute winter	7	2.001	8	15.6	0.773	0.367	0.2652	
15 minute winter	8	2.002	9	15.5	0.773	0.582	0.5667	
15 minute winter	9	1.005	17	82.0	1.068	0.543	1.5581	
15 minute winter	10	3.000	11	7.8	0.900	0.111	0.2147	
15 minute winter	11	3.001	12	13.2	1.283	0.188	0.0873	
15 minute winter	12	3.002	13	13.1	1.221	0.187	0.2140	
15 minute winter	13	3.003	14	21.4	1.083	0.143	0.3723	
15 minute winter	14	3.004	16	28.4	1.124	0.302	0.6285	
15 minute winter	15	4.000	16	5.0	1.034	0.066	0.1965	
15 minute summer	16	3.005	17	43.7	0.874	0.428	0.4916	
15 minute winter	17	1.006	18	161.5	2.185	0.498	3.0083	
480 minute winter	18	1.007	19	3.0	0.095	0.018	1.6769	
480 minute winter	19	1.008	32	3.0	0.126	0.011	1.0770	
15 minute winter	20	5.000	21	7.1	0.633	0.164	0.3233	
15 minute winter	21	5.001	22	13.5	0.821	0.311	0.5012	
15 minute winter	22	5.002	23	19.8	1.056	0.456	0.5685	
15 minute winter	23	5.003	24	25.5	1.214	0.274	0.4576	
15 minute winter	24	5.004	29	25.2	1.154	0.131	2.2264	
15 minute winter	25	6.000	26	16.9	0.927	0.437	0.4632	

Flow+ v10.2 Copyright © 1988-2022 Causeway Technologies Ltd

Results for 1 year Critical Storm Duration. Lowest mass balance: 99.80%

Node Event	US Node	Peak (mins)	Level (m)	Depth (m)	Inflow (l/s)	Node Vol (m³)	Flood (m³)	Status
15 minute winter	26	11	54.332	0.115	29.9	0.2793	0.0000	OK
15 minute winter	28	11	54.032	0.152	39.7	0.3511	0.0000	OK
15 minute winter	29	10	54.015	0.502	86.2	1.3126	0.0000	OK
960 minute winter	30	705	53.678	0.172	6.0	105.1382	0.0000	OK
960 minute winter	31	705	53.678	0.182	2.2	0.4594	0.0000	OK
30 minute winter	32	23	53.649	0.189	9.0	0.3943	0.0000	OK
15 minute summer	33	1	55.102	0.000	0.0	0.0000	0.0000	OK
15 minute winter	34	11	55.048	0.057	4.9	0.0373	0.0000	OK
15 minute summer	35	1	55.102	0.000	0.0	0.0000	0.0000	OK
30 minute winter	36	24	53.648	0.162	9.2	0.2440	0.0000	OK
30 minute winter	37	23	53.648	0.230	14.5	0.5152	0.0000	SURCHARGED
30 minute winter	38_OUT	24	53.376	0.071	7.5	0.0000	0.0000	OK

Link Event (Upstream Depth)	US Node	Link	DS Node	Outflow (l/s)	Velocity (m/s)	Flow/Cap	Link Vol (m³)	Discharge Vol (m³)
15 minute winter	26	6.001	28	29.6	1.055	0.199	1.3238	
15 minute winter	28	6.002	29	48.6	1.113	0.179	4.1120	
15 minute winter	29	5.005	30	125.8	2.043	0.763	0.6323	
960 minute winter	30	5.006	31	2.1	-0.065	0.012	0.5123	
960 minute winter	31	5.007	32	2.2	0.098	0.008	0.8988	
30 minute winter	32	1.009	37	-4.9	0.097	-0.018	2.1937	
15 minute summer	33	7.000	34	0.0	0.000	0.000	0.0955	
15 minute winter	34	7.001	36	4.7	0.608	0.137	0.1435	
15 minute summer	35	8.000	36	0.0	0.000	0.000	0.0000	
30 minute winter	36	7.002	37	7.7	0.207	0.019	1.6157	
30 minute winter	37	1.010	38_OUT	7.5	0.692	0.220	0.2794	53.1

Flow+ v10.2 Copyright © 1988-2022 Causeway Technologies Ltd

Results for 30 year Critical Storm Duration. Lowest mass balance: 99.80%

Node Event	US Node	Peak (mins)	Level (m)	Depth (m)	Inflow (l/s)	Node Vol (m³)	Flood (m³)	Status
15 minute winter	1	10	54.943	0.087	13.1	0.1093	0.0000	OK
15 minute winter	2	11	54.858	0.145	28.6	0.2047	0.0000	OK
15 minute winter	3	11	54.598	0.133	27.9	0.1510	0.0000	OK
15 minute winter	4	11	54.460	0.148	48.7	0.3706	0.0000	OK
15 minute winter	5	9	54.303	0.462	81.3	1.5530	0.0000	SURCHARGED
15 minute winter	6	10	54.473	0.223	22.1	0.2729	0.0000	OK
15 minute winter	7	10	54.417	0.355	39.5	0.3114	0.0000	SURCHARGED
15 minute winter	8	9	54.330	0.352	40.5	0.0560	0.0000	SURCHARGED
15 minute winter	9	9	54.243	0.476	161.1	0.9705	0.0000	SURCHARGED
15 minute winter	10	10	55.430	0.080	19.2	0.1058	0.0000	OK
15 minute winter	11	10	55.025	0.122	32.7	0.0919	0.0000	OK
15 minute winter	12	10	54.861	0.112	32.4	0.0177	0.0000	OK
15 minute winter	13	10	54.516	0.128	53.2	0.2407	0.0000	OK
15 minute winter	14	9	54.294	0.244	68.9	0.4046	0.0000	OK
15 minute winter	15	10	54.536	0.061	12.5	0.0376	0.0000	OK
15 minute winter	16	9	54.224	0.393	96.0	0.5788	0.0000	SURCHARGED
15 minute winter	17	9	54.192	0.605	284.8	1.0683	0.0000	SURCHARGED
480 minute winter	18	464	54.016	0.486	27.1	234.1221	0.0000	OK
480 minute winter	19	464	54.016	0.512	3.6	0.9048	0.0000	OK
15 minute winter	20	10	54.940	0.098	17.8	0.1224	0.0000	OK
15 minute winter	21	10	54.788	0.147	33.5	0.1454	0.0000	OK
15 minute winter	22	11	54.675	0.247	49.1	0.2156	0.0000	SURCHARGED
15 minute winter	23	11	54.328	0.188	61.1	0.3153	0.0000	OK
15 minute winter	24	9	54.189	0.202	61.0	0.2286	0.0000	OK
15 minute winter	25	11	54.722	0.214	42.5	0.6811	0.0000	OK

Link Event (Upstream Depth)	US Node	Link	DS Node	Outflow (l/s)	Velocity (m/s)	Flow/Cap	Link Vol (m³)	Discharge Vol (m³)
15 minute winter	1	1.000	2	12.9	0.630	0.325	0.4991	
15 minute winter	2	1.001	3	27.9	1.068	0.703	0.7678	
15 minute winter	3	1.002	4	28.1	0.868	0.394	1.1892	
15 minute winter	4	1.003	5	48.1	1.426	0.457	1.7518	
15 minute winter	5	1.004	9	98.0	0.708	0.648	5.2624	
15 minute winter	6	2.000	7	23.6	0.735	0.558	1.1187	
15 minute winter	7	2.001	8	40.5	1.018	0.956	0.5031	
15 minute winter	8	2.002	9	41.2	1.038	1.542	0.9034	
15 minute winter	9	1.005	17	174.8	1.340	1.157	2.1466	
15 minute winter	10	3.000	11	19.0	1.109	0.271	0.4236	
15 minute winter	11	3.001	12	32.4	1.559	0.461	0.1757	
15 minute winter	12	3.002	13	32.2	1.502	0.458	0.4252	
15 minute winter	13	3.003	14	52.2	1.273	0.347	0.8067	
15 minute winter	14	3.004	16	71.1	1.360	0.758	1.3249	
15 minute winter	15	4.000	16	12.4	1.101	0.163	0.5549	
15 minute winter	16	3.005	17	110.0	1.271	1.079	0.7967	
15 minute winter	17	1.006	18	311.2	2.639	0.960	3.6415	
480 minute winter	18	1.007	19	3.6	0.128	0.022	4.4797	
480 minute winter	19	1.008	32	3.8	0.103	0.014	3.7212	
15 minute winter	20	5.000	21	17.5	0.793	0.403	0.6288	
15 minute winter	21	5.001	22	33.1	0.975	0.760	1.0071	
15 minute winter	22	5.002	23	47.4	1.234	1.090	1.1213	
15 minute winter	23	5.003	24	61.0	1.517	0.655	1.0091	
15 minute winter	24	5.004	29	63.7	1.505	0.332	3.0045	
15 minute winter	25	6.000	26	40.9	1.133	1.058	0.9047	

Flow+ v10.2 Copyright © 1988-2022 Causeway Technologies Ltd

Results for 30 year Critical Storm Duration. Lowest mass balance: 99.80%

Node Event	US Node	Peak (mins)	Level (m)	Depth (m)	Inflow (l/s)	Node Vol (m³)	Flood (m³)	Status
15 minute winter	26	11	54.407	0.190	72.5	0.4606	0.0000	OK
15 minute winter	28	9	54.200	0.320	97.0	0.7379	0.0000	OK
15 minute winter	29	9	54.143	0.630	221.0	1.6464	0.0000	SURCHARGED
600 minute winter	30	570	53.903	0.397	19.3	241.8027	0.0000	OK
600 minute winter	31	570	53.903	0.407	3.5	1.0241	0.0000	OK
30 minute winter	32	25	53.884	0.424	27.9	0.8854	0.0000	OK
15 minute summer	33	1	55.102	0.000	0.0	0.0000	0.0000	OK
15 minute winter	34	10	55.084	0.093	11.9	0.0604	0.0000	OK
15 minute summer	35	1	55.102	0.000	0.0	0.0000	0.0000	OK
30 minute winter	36	25	53.884	0.398	22.6	0.6001	0.0000	OK
30 minute winter	37	25	53.884	0.466	35.2	1.0426	0.0000	SURCHARGED
30 minute winter	38_OUT	25	53.384	0.079	9.5	0.0000	0.0000	OK

Link Event (Upstream Depth)	US Node	Link	DS Node	Outflow (l/s)	Velocity (m/s)	Flow/Cap	Link Vol (m³)	Discharge Vol (m³)
15 minute winter	26	6.001	28	72.3	1.330	0.486	2.9334	
15 minute winter	28	6.002	29	125.0	1.336	0.461	5.7742	
15 minute winter	29	5.005	30	272.0	2.737	1.648	0.6666	
600 minute winter	30	5.006	31	3.5	-0.132	0.020	1.4159	
600 minute winter	31	5.007	32	3.6	0.110	0.013	3.0036	
30 minute winter	32	1.009	37	-17.8	-0.139	-0.064	5.6013	
15 minute summer	33	7.000	34	0.0	0.000	0.000	0.1870	
15 minute winter	34	7.001	36	11.5	0.774	0.334	0.2751	
15 minute summer	35	8.000	36	0.0	0.000	0.000	0.0000	
30 minute winter	36	7.002	37	18.4	0.266	0.046	4.3585	
30 minute winter	37	1.010	38_OUT	9.5	0.735	0.275	0.3293	103.3

Flow+ v10.2 Copyright © 1988-2022 Causeway Technologies Ltd

Results for 100 year +40% CC Critical Storm Duration. Lowest mass balance: 99.80%

Node Event	US Node	Peak (mins)	Level (m)	Depth (m)	Inflow (l/s)	Node Vol (m³)	Flood (m³)	Status
15 minute winter	1	11	55.046	0.190	23.7	0.2372	0.0000	OK
15 minute winter	2	11	55.004	0.291	48.5	0.4113	0.0000	SURCHARGED
15 minute winter	3	11	54.654	0.189	48.3	0.2133	0.0000	OK
15 minute winter	4	9	54.571	0.259	84.9	0.6499	0.0000	OK
960 minute winter	5	930	54.520	0.679	10.2	2.2845	0.0000	SURCHARGED
15 minute winter	6	11	55.228	0.978	40.0	1.1988	0.0000	SURCHARGED
15 minute winter	7	11	55.045	0.983	68.2	0.8610	0.0000	SURCHARGED
15 minute winter	8	11	54.749	0.771	67.4	0.1227	0.0000	SURCHARGED
960 minute winter	9	945	54.521	0.754	17.0	1.5372	0.0000	SURCHARGED
15 minute winter	10	10	55.461	0.111	34.7	0.1471	0.0000	OK
15 minute winter	11	11	55.192	0.289	59.3	0.2185	0.0000	SURCHARGED
15 minute winter	12	11	55.039	0.290	55.9	0.0461	0.0000	SURCHARGED
15 minute winter	13	11	54.748	0.360	91.4	0.6777	0.0000	SURCHARGED
15 minute winter	14	11	54.572	0.522	121.7	0.8666	0.0000	SURCHARGED
15 minute winter	15	10	54.558	0.083	22.6	0.0513	0.0000	OK
960 minute winter	16	945	54.521	0.690	11.5	1.0147	0.0000	SURCHARGED
960 minute winter	17	930	54.520	0.933	27.4	1.6487	0.0000	SURCHARGED
960 minute winter	18	930	54.520	0.990	26.8	476.8195	0.0000	SURCHARGED
960 minute winter	19	930	54.520	1.016	3.7	1.7960	0.0000	SURCHARGED
15 minute winter	20	11	55.764	0.922	32.1	1.1466	0.0000	FLOOD RISK
15 minute winter	21	11	55.663	1.022	55.4	1.0106	0.0000	SURCHARGED
15 minute winter	22	11	55.278	0.850	80.9	0.7429	0.0000	SURCHARGED
15 minute winter	23	11	54.458	0.318	103.6	0.5344	0.0000	SURCHARGED
720 minute winter	24	705	54.305	0.318	9.5	0.3598	0.0000	OK
15 minute winter	25	11	55.169	0.661	76.8	2.1034	0.0000	SURCHARGED

Link Event (Upstream Depth)	US Node	Link	DS Node	Outflow (l/s)	Velocity (m/s)	Flow/Cap	Link Vol (m³)	Discharge Vol (m³)
15 minute winter	1	1.000	2	21.8	0.692	0.549	0.9201	
15 minute winter	2	1.001	3	48.3	1.234	1.216	1.0913	
15 minute winter	3	1.002	4	47.8	0.987	0.669	2.0225	
15 minute winter	4	1.003	5	87.2	1.395	0.829	2.4137	
960 minute winter	5	1.004	9	9.6	0.394	0.064	5.2624	
15 minute winter	6	2.000	7	38.3	0.963	0.904	1.1200	
15 minute winter	7	2.001	8	67.4	1.695	1.592	0.5031	
15 minute winter	8	2.002	9	67.6	1.701	2.533	0.9034	
960 minute winter	9	1.005	17	16.3	0.621	0.108	2.1468	
15 minute winter	10	3.000	11	34.6	1.212	0.492	0.7199	
15 minute winter	11	3.001	12	55.9	1.644	0.796	0.3366	
15 minute winter	12	3.002	13	57.0	1.529	0.811	0.7889	
15 minute winter	13	3.003	14	91.6	1.300	0.610	1.3075	
15 minute winter	14	3.004	16	121.9	1.732	1.299	1.4161	
15 minute winter	15	4.000	16	22.5	1.094	0.295	0.6134	
960 minute winter	16	3.005	17	11.1	0.602	0.109	0.7968	
960 minute winter	17	1.006	18	26.8	0.727	0.083	7.1647	
960 minute winter	18	1.007	19	3.7	0.118	0.022	4.5719	
960 minute winter	19	1.008	32	3.8	0.109	0.014	7.4636	
15 minute winter	20	5.000	21	28.3	0.815	0.651	1.1324	
15 minute winter	21	5.001	22	53.7	1.351	1.234	1.2034	
15 minute winter	22	5.002	23	78.8	1.983	1.811	1.2033	
15 minute winter	23	5.003	24	100.5	1.701	1.080	1.4474	
720 minute winter	24	5.004	29	9.5	0.774	0.049	3.6929	
15 minute winter	25	6.000	26	73.3	1.843	1.898	0.9980	

Flow+ v10.2 Copyright © 1988-2022 Causeway Technologies Ltd

Results for 100 year +40% CC Critical Storm Duration. Lowest mass balance: 99.80%

Node Event	US Node	Peak (mins)	Level (m)	Depth (m)	Inflow (l/s)	Node Vol (m³)	Flood (m³)	Status
15 minute winter	26	11	54.502	0.285	128.8	0.6907	0.0000	OK
15 minute winter	28	8	54.336	0.456	174.1	1.0511	0.0000	SURCHARGED
720 minute winter	29	705	54.305	0.792	29.2	2.0706	0.0000	SURCHARGED
720 minute winter	30	705	54.305	0.799	31.6	487.2737	0.0000	SURCHARGED
720 minute winter	31	705	54.305	0.809	3.9	2.0381	0.0000	SURCHARGED
60 minute winter	32	46	55.817	2.357	36.8	4.9215	0.0000	SURCHARGED
60 minute winter	33	46	55.820	0.718	5.0	0.1141	0.0000	SURCHARGED
60 minute winter	34	46	55.812	0.821	21.7	0.5327	0.0000	SURCHARGED
60 minute winter	35	45	55.820	0.718	6.0	0.1142	0.0000	SURCHARGED
60 minute winter	36	46	55.815	2.329	27.6	3.5152	0.0000	SURCHARGED
60 minute winter	37	46	55.816	2.398	42.3	5.3669	0.0000	SURCHARGED
60 minute winter	38_OUT	46	53.389	0.084	10.6	0.0000	0.0000	OK

Link Event (Upstream Depth)	US Node	Link	DS Node	Outflow (l/s)	Velocity (m/s)	Flow/Cap	Link Vol (m³)	Discharge Vol (m³)
15 minute winter	26	6.001	28	129.3	1.499	0.869	4.2271	
15 minute winter	28	6.002	29	183.2	1.523	0.676	6.5595	
720 minute winter	29	5.005	30	28.2	0.842	0.171	1.2783	
720 minute winter	30	5.006	31	-3.8	-0.144	-0.023	1.7259	
720 minute winter	31	5.007	32	3.9	0.108	0.014	6.0600	
60 minute winter	32	1.009	37	-24.5	-0.131	-0.087	7.0481	
60 minute winter	33	7.000	34	-5.0	-0.137	-0.146	0.9905	
60 minute winter	34	7.001	36	-12.3	0.766	-0.358	0.7347	
60 minute winter	35	8.000	36	-6.0	-0.232	-0.133	1.0038	
60 minute winter	36	7.002	37	21.8	0.245	0.055	5.6702	
60 minute winter	37	1.010	38_OUT	10.6	0.760	0.309	0.3574	150.4

Flow+ v10.2 Copyright © 1988-2022 Causeway Technologies Ltd

Merchant Exchange
17-19 Whitworth Street West
manchester@curtins.com
Manchester
M1 5WG

T. 0161 236 2394

www.curtins.com

Appendix C

- Surface Water Calcs – Existing Greenfield Volume
- Surface Water Calcs – Proposed Discharge Volume 100 Year +cc 360min

Greenfield Runoff Volume

FSR Data

Return Period (years)	100
Storm Duration (mins)	360
Region	England and Wales
M5-60 (mm)	18.200
Ratio R	0.354
Areal Reduction Factor	1.00
Area (ha)	1.900
SAAR (mm)	896
CWI	121.876
Urban	0.000
SPR	47.000

Results

Percentage Runoff (%)	49.94
Greenfield Runoff Volume (m^3)	573.760

©1982-2019 Innovyze

Flow+ - Proposed Surface Water 03.06.22.pfd

File Help

- Sketch
- Simulation Settings
- Storm Network
- Design Settings
- Nodes
- Links
- Manhole Schedule
- Hydrographs
- Flow Controls
- Storage
- Other
- Results
- Approval Settings
- Approval Results
- Libraries
- Manhole Types
- Link Types
- Networks
- Preferences

100 year +40% CC | 360 minute winter

Results for 100 year +40% CC 360 minute winter. 600 minute analysis at 8 minute timestep.
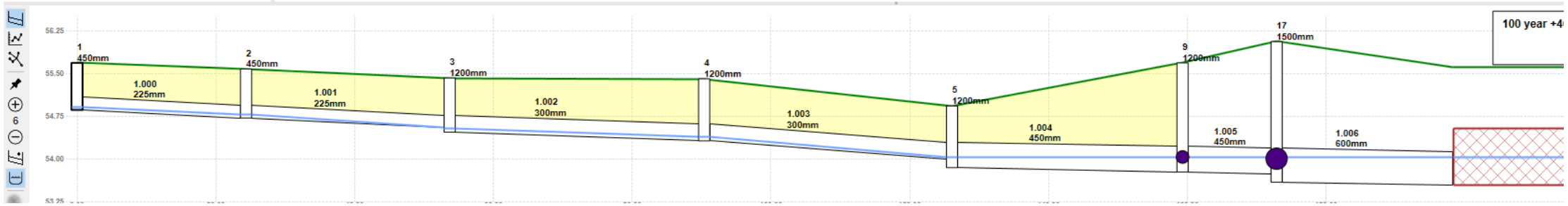
US Node ID	Peak (mins)	Level (m)	Depth (m)	Inflow (l/s)	Node Vol (m³)	Flood (m³)	Status	Link ID	DS Node ID	Outflow (l/s)	Velocity (m/s)	Flow/Cap	Link Vol (m³)	Discharge Vol (m³)
13	360	54.487	0.099	13.8	0.1862	0.0000	OK	3.003	14	13.8	0.997	0.092	0.8413	
14	360	54.487	0.437	18.4	0.7255	0.0000	SURCHARGED	3.004	16	18.5	1.004	0.197	1.4161	
15	184	54.506	0.031	3.2	0.0193	0.0000	OK	4.000	16	3.2	0.939	0.042	0.4920	
16	360	54.488	0.657	24.9	0.9664	0.0000	SURCHARGED	3.005	17	24.0	0.785	0.236	0.7968	
17	352	54.487	0.900	59.8	1.5909	0.0000	SURCHARGED	1.006	18	58.5	0.998	0.180	7.1647	
18	360	54.487	0.957	58.5	460.9766	0.0000	SURCHARGED	1.007	19	3.7	0.144	0.022	4.5719	
19	360	54.487	0.983	3.7	1.7378	0.0000	SURCHARGED	1.008	32	4.4	0.060	0.016	7.4636	
20	184	54.891	0.049	4.6	0.0609	0.0000	OK	5.000	21	4.6	0.564	0.105	0.2332	
21	184	54.709	0.068	8.7	0.0669	0.0000	OK	5.001	22	8.7	0.730	0.199	0.3603	
22	184	54.513	0.085	12.8	0.0746	0.0000	OK	5.002	23	12.7	0.943	0.293	0.4086	
23	360	54.265	0.125	16.4	0.2094	0.0000	OK	5.003	24	16.4	1.071	0.176	1.0426	
24	360	54.265	0.278	16.4	0.3142	0.0000	OK	5.004	29	16.4	0.946	0.085	3.4793	
25	184	54.592	0.084	10.9	0.2667	0.0000	OK	6.000	26	10.9	0.827	0.282	0.3347	
26	184	54.309	0.092	19.2	0.2223	0.0000	OK	6.001	28	19.1	0.934	0.129	2.4835	
28	360	54.265	0.385	25.8	0.8877	0.0000	OK	6.002	29	25.8	0.842	0.095	6.2674	
29	360	54.265	0.752	50.5	1.9653	0.0000	SURCHARGED	5.005	30	48.7	1.031	0.295	1.2783	
30	360	54.265	0.759	56.9	462.7119	0.0000	SURCHARGED	5.006	31	-9.2	-0.207	-0.054	1.7259	
31	360	54.265	0.769	9.5	1.9367	0.0000	SURCHARGED	5.007	32	4.5	0.138	0.016	6.0600	
32	216	54.227	0.767	9.5	1.6005	0.0000	SURCHARGED	1.009	37	9.0	0.091	0.032	7.0481	
33	8	55.102	0.000	0.0	0.0000	0.0000	OK	7.000	34	0.0	0.000	0.000	0.0732	
34	184	55.037	0.046	3.1	0.0301	0.0000	OK	7.001	36	3.1	0.541	0.090	0.1055	
35	8	55.102	0.000	0.0	0.0000	0.0000	OK	8.000	36	0.0	0.000	0.000	0.0000	
36	216	54.227	0.741	7.6	1.1175	0.0000	SURCHARGED	7.002	37	6.8	0.113	0.017	5.6702	
37	216	54.227	0.809	12.4	1.8095	0.0000	SURCHARGED	1.010	38_OUT	9.7	0.741	0.283	0.3356	278.9
38_OUT	352	53.385	0.080	9.7	0.0000	0.0000	OK