Arboricultural Method Statement

Tyler Grange

MSP Greenheys
15th May 2023

TG Report No. 15264_R05a_WS

Project No:	Report No.	Date	Revision
15264	R05a	15th May 2023	A
Admin QA	**Author**	**Checked**	**Approved**
Charlie Woods	Wilson Scott BSc (Hons) FdSc MArborA	Jack Jewell BA (Hons) MLA CMLI	Jack Jewell BA (Hons) MLA CMLI

Disclosure:

This report, all plans, illustrations, and other associated material remains the property of Tyler Grange Group Ltd until paid for in full. Copyright and intellectual property rights remain with Tyler Grange Group Ltd.

The contents of this report are valid at the time of writing. Tyler Grange shall not be liable for any use of this report other than for the purposes for which it was produced. Owing to the dynamic nature of ecological, landscape, and arboricultural resources, if more than twelve months have elapsed since the date of this report, further advice must be taken before you rely on the contents of this report. Notwithstanding any provision of the Tyler Grange Group Ltd Terms & Conditions, Tyler Grange Group Ltd shall not be liable for any losses (howsoever incurred) arising as a result of reliance by the client or any third party on this report more than 12 months after the date of this report.

Contents:

Section 1: Overview 1
Section 2: Arboricultural Method Statement 2

Appendices:

Appendix 1: Tree Survey Schedule
Appendix 2: Signage Example
Appendix 3: Arboricultural Works Audit
Appendix 4: Report Limitations and Tree Legislation

Plans:

Plan 1: Tree Constraints Plan (TCP), (15264/P02a)
Plan 2: Tree Retention and Removal Plan (TRRP), (15264/P03a)
Plan 3: Tree Protection Plan (TPP), (15264/P04)

Key Contacts:

Tyler Grange Arboricultural Team:
trees@tylergrange.co.uk
01285 831804

Local Planning Authority Arboricultural Department:
Planning@manchester.gov.uk
0161 234 4516

Section 1: Overview

1.1. This Arboricultural Method Statement (AMS) has been prepared by Tyler Grange Group Limited (TG) on behalf of Bruntwood SciTech to support a full planning application for the construction of a new 17,249 sqm, 7 storey new-build, with associated infrastructure and landscaping, henceforth referred to as 'the site'.

1.2. The purpose of this AMS is to detail the procedures for tree removal and tree protection during the demolition and construction phases of the development in accordance with the planning condition and industry best practice. This report has been guided by the recommendations of the British Standard 5837:2012 'Trees in Relation to Design, Demolition and Construction – Recommendations' (BS5837).

1.3. The limitations to the tree survey and this report are set-out at **Appendix 4**.

Site and Tree Survey

1.4. A pre-development tree survey of the site has been completed in accordance with BS5837. Findings for each of the trees surveyed are detailed in the **Tree Survey Schedule (See Appendix 1)** and the accompanying **Tree Constraints Plan (See Plan 1)**. The Tree Survey Schedule provides a record of each survey entry, including tree reference numbers, species, tree and root protection area (RPA) dimensions, life stage, physiological and structural condition, and arboricultural value.

Statutory Designations Relating to Arboriculture

1.5. The site is not situated within a conservation area, nor are there any Tree Preservation Orders (TPO) present at the site. Further details of the legislation are provided at **Appendix 4**.

Section 2: Arboricultural Method Statement

2.1. The Plans and Appendices contained within must be read in conjunction with this report. These include:

- **Tree Retention and Removal Plan (TRRP) (See Plan 2)** – details the trees to be retained, removed or pruned.
- **Tree Protection Plan (TPP) (See Plan 3) –** details the protection measures for retained trees, including working within the RPAs.
- **Arboricultural Work Audit (AWA) (See Appendix 3) –** details a schedule of specific site events requiring input or supervision from a qualified arboricultural consultant.

2.2. This AMS details the following key areas of work relation to trees during the site preparation, demolition and / or construction phase:

AMS01 - Timing of Works and Site Monitoring Requirements

AMS02 - Tree Removal

AMS03 - Tree Protection Fencing

AMS04 - Works within Root Protection Areas (RPAs)

AMS05 - General Site Precautions

AMS06 - Procedures for Incidents

2.3. The **TPP (See Plan 3)** shows the Root Protection Areas (RPAs) and branches spread of retained trees. The RPA signifies the area that must be protected during the demolition and construction works to avoid harm to the rooting environments of trees. Where development and site works occur within RPAs or close the tree branches, there are mitigative measures and protocols that must be adhered to as detailed within this document. Unless otherwise stated within this document, within the areas protected by tree protection barriers the following shall apply:

- No excavation
- No lowering of levels
- No storage of plant or materials
- No vehicular access
- No fire lighting
- No parking
- No welfare facilities
- No substances harmful to the environment or trees health shall be stored adjacent to or allow to flow into tree protection areas. This includes all fuels, oils, bitumen, cement storage towers and washing arear, building sand, salt or any other chemicals.

- No fires shall be lit in within 15m of the trees canopy.

AMS 01 – Timing of Works and Site Monitoring Requirements

Timing of Works

2.4. The development must be carried out in the following order unless otherwise agreed in writing with the LPA. Each step must be completed in accordance with this document and before moving onto the next:

1) Tree removals and pruning works.
2) Tree protection fencing installed.
3) Site accessible to plant and construction traffic.
4) Demolition, site clearance and groundworks (cut and fill)
5) Construction
6) Removal of tree protection fence
7) Soft landscape operations

Arboricultural Site Monitoring

2.5. Site monitoring by an appropriately qualified Arboriculturist will be undertaken as set-out within the **AWA (See Appendix 3)**. This includes the following key work stages:

- Pre-commencement meeting
- Tree removals and pruning
- Installation of tree protection barriers
- Works within RPAs

2.6. It is the responsibility of the Site Manager to request (with sufficient notice) the attendance of an Arboricultural Consultant to oversee the work as detailed above. It is not the responsibility of Tyler Grange to enforce site monitoring works throughout the course of the development. A copy of the Works Audit and supporting photographic evidence will completed by the appointed Arboricultural Consultant and issued to the client. Reporting to the LPA's Arboricultural Department will be the responsibility of the client following the completion of each task.

AMS 02 – Tree Removal and Pruning Works

2.7. Trees to be removed and pruned will be clearly identified on-site (via spray marking / taping / tagging as required) to avoid erroneous tree works. The appointed Arboricultural Consultant will be contacted if there is any uncertainty on trees to be removed or pruned.

2.8. Tree removals and pruning works will be carried out prior to the installation of tree protection barriers. Guidance will be sought from the appointed arboricultural consultant where tree removal works are to be phased and / or completed after the installation of tree protection fencing.

2.9. A geocoordinate AutoCAD file of the TRRP is available upon request which can be used by a surveyor to mark out the extent of tree group and hedgerow removals.

2.10. Tree works must be undertaken in accordance with BS3998:2010 by a competent tree contractor and should avoid the main nesting season for birds between 1st March and 31st August each year. If such timescales are unachievable, the advice of an ecologist will need to be sought to determine any further necessary protective and precautionary working measures to avoid disturbance to nesting birds and other wildlife.

2.11. The tree surgery contractor is responsible for carrying out any relevant health and safety risk assessment, and insurance, prior to any tree work being carried out.

2.12. No trees to be retained shall be used for anchorage or winching purposes.

Tree Removals

2.13. The **TRRP (See Plan 2)** identifies trees to be retained and removed. Trees to be removed are shown with a dashed tree canopy outline and red identification number. The removals will be restricted to and must follow the procedures as listed in Table 1 below.

Table 1. Tree Removals and Procedures

Tree Number	Removal Procedures
T1	Fell to ground level, grind out stump.
T8	Fell to ground level, grind out stump.
T9	Fell to ground level, grind out stump.
T10	Fell to ground level, grind out stump.
T11	Fell to ground level, grind out stump.
T12	Fell to ground level, grind out stump.
T13	Fell to ground level, grind out stump.
T14	Fell to ground level, grind out stump.
T15	Fell to ground level, grind out stump.
H7	Fell to ground level, grind out stump.

2.14. Remaining stumps from felled trees and vegetation within the RPAs of retained tree T12 must be carefully cut flush to ground level and left in situ or ground out as opposed to pulled out with a machine. This is required to avoid up-rooting and disturbance within the rooting environment of adjacent retained trees.

2.15. Following the proposed tree removals, it will be necessary to review retained tree canopies that form a new edge to groups of trees. This will be applicable to retained tree canopies with groups G16. Remedial pruning of over-extended and poorly formed branches should be undertaken to achieve a wind-firm edge along the tree group.

Tree Pruning

2.16. The **TRRP (See Plan 2)** identifies trees to be pruned with a pink hatch. The pruning works will be restricted to and must follow the procedures as listed in Table 2 below.

Table 2. Tree Pruning Works

Tree Number	Pruning Procedures
G16	South western canopy extents to be pruned back by 2m to provide clearance from the adjacent building proposed for demolition.

AMS 03 – Tree Protection Fencing

2.17. Tree protection fencing must be installed to protect the roots, trunks and branches of retained trees from damage.

2.18. Tree protection barriers will be fully installed before the arrival of any plant or construction activity on-site. The barriers will serve to prohibit any access into the RPAs, and unless otherwise stated in this AMS, tree protection barriers will remain in place for the duration of the demolition and construction works until the construction work is deemed completed.

2.19. The **TPP (See Plan 3)** identifies the location of the tree protective fencing. To ensure accurate positioning and to avoid costly adjustments, the tree protection fence must be set out by a surveyor with all node points being marked clearly on site for the fencing contractor to work to. A geocoordinate AutoCAD file of the **TPP** is available upon request.

2.20. The fencing will comprise a scaffold framework, well braced to resist impacts, with vertical tubes spaced at a maximum of 3m to add further stability. Onto this, weldmesh panels will be securely fixed with wire or scaffold clamps.

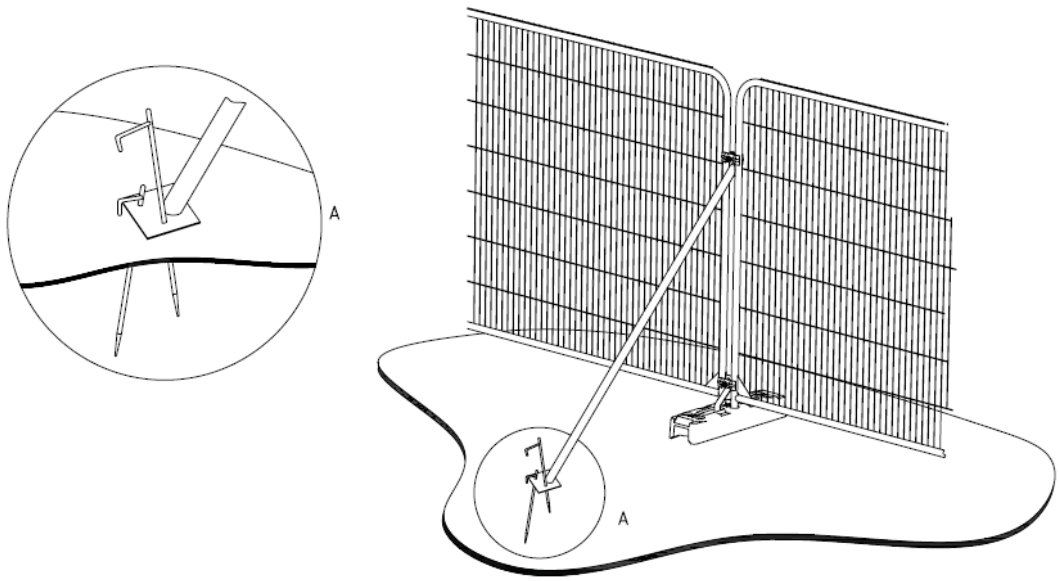

a) Stabilizer strut with base plate secured with ground pins

2.21. Stages for installing Tree Protection Fence are as follows:

1) Clearance of vegetation (where required) to allow working access to install the protection fence;

2) Setting out of fencing node points or spray marked by an appointed arboricultural consultant;

3) Fence is installed and signs installed;

4) Appointed Arboricultural Consultant attends site to inspect protection fence on-site; and

5) Site accessible to construction traffic.

2.22. Where necessary, secondary or temporary locations of tree protection fencing are illustrated on the TPP. The barrier repositioning is required to gain access to aspects of demolition and construction within the RPAs of T4, T5, T6 and G3. Repositioning of fencing will only be undertaken once the required works with the previously fenced off area are imminent. Following completion of the works within the RPAs, the barriers will be placed by to their original position. Barriers do not need to be repositioned back to their original location following the completion of new/resurfacing works within the RPA. In this instance, the barriers must be sited to protect any exposed and unsurfaced parts of the RPA and the branches of the tree.

2.23. Special attention is essential in maintaining the protective barriers during the demolition and construction phases, ensuring that it remains rigid and complete as well as fit for the purpose intended. Protective barriers will be inspected frequently and repairs shall be made immediately where required.

2.24. All-weather notices will be attached to the barriers with words such as 'Construction Exclusion Zone – No Access' (See signage example at **Appendix 2**).

2.25. Any alterations to the tree protection fence otherwise as stated within this AMS must only be completed under the guidance of a suitably qualified arboricultural consultant.

AMS 04 - Works within Root Protection Areas (RPAs)

2.26. The **TPP** (**See Plan 3**) shows the RPAs of retained trees. This signifies the area that must be protected during the demolition and construction works to avoid harm to the rooting environments of trees. Where development and site works occur in these areas, there are mitigative measures and protocols to adhere to as detailed within the document.

2.27. RPAs for G16 have been reshaped to reflect the presence of a either or combination of highways, building foundations and sudden level changes which are considered to act as a barrier towards root growth. Where the shape of an RPA has been altered, the extent of the RPA has not been reduced but compensated to include areas that are considered to be more advantageous to root development.

Removal of Hard Surfacing within RPAs

2.28. The TPP (See Plan 3) identifies areas of existing hard surfacing within RPAs that require removal as part of the demolition works. This includes the removal of slab pavement within RPAs of T4, T5, T6 and G3

2.29. The removal of surfaces from RPAs will adopt the following protective measures:

1) The works will be completed under the supervision of a qualified arboricultural consultant;

2) Protection fencing will be temporarily removed / repositioned to provide access;

3) Ground boarding will be placed over parts of the RPA that are not surfaced and where access is required. Any machine use must be operated on hard surfaced ground or as a last result on soft-ground which is protected by ground protection boards as detailed within this document;

4) Any machine should work backwards over the area to prevent damage to any exposed RPA;

5) The surface will be sensitivity removed, breaking-up the top layer using hand-held breakers or small excavator and avoiding any excavation into the sub-bases or soil layers where roots may be present;

6) Paved / slab surfaces will be lifted carefully by hand;

7) Where possible, any existing sub-base will be left in situ / made good if new surfacing is to be laid;

8) Kerbs and haunching will be retained and utilised for re-surfacing where applicable. Kerbs and haunching to be removed must be 'peeled back' from their position away from the tree with a small machine. Any lodged haunching will be broken up and removed by hand. No excavation will occur behind the kerb line (towards the tree) where tree roots may be present;

9) If the removal sub-base material is required, this will be undertaken by hand to avoid any damage to tree roots. Any tree roots identified will be retained where possible. Small roots measured under 25mm in diameter may be cleanly pruned back if required. Roots measured over 25mm must be retained and the appointed arboricultural consultant will review the significance of the root(s) to the tree's health and stability;

10) The newly exposed soil and any exposed roots will be covered with up to 100mm of topsoil extract from elsewhere on the site or imported (to BS3882:2015). Soil may be placed in the area by plant sited outside the RPA and spread by hand; and

11) Tree protection fencing to be reinstated in final (post demolition position as shown on the **TPP**).

Removal of Built Structures and Foundations within RPAs

2.30. The **TPP (See Plan 3)** identifies areas of existing hard surfacing within RPAs that require removal as part of the demolition works. This includes the removal of an existing bike shelter within RPAs of G3.

2.31. The removal of built structures and their foundations from RPAs will adopt the following protective measures:

1) Protection fencing will be temporarily removed / repositioned to provide access;

2) Ground boarding will be placed over parts of the exposed RPA that are not surfaced and where access is required. Any machine use must be operated outside from the RPA, or on hard surfaced ground. Machines will only operate within soft-ground RPA as a last resort which is protected by ground protection boards as detailed within this document;

3) Buildings will be folded in on themselves using a 'top down pull back' approach away from the trees;

4) Debris will be removed by hand or with plant machinery not located on any exposed rooting area;

5) Floors will be broken up with a hand-held breaker and pieces removed by hand. Slab floors can be lifted carefully by machinery if appropriate;

6) Trench foundations within the RPAs will be carefully pulled in on themselves, peeling the structure away from the tree and rooting area. These works will be completed under the supervision of a qualified arboricultural consultant;

7) The newly exposed soil and any exposed roots will be covered with up to 100mm of topsoil extract from elsewhere on the site or imported (to BS3882:2015). Soil may be placed in the area by plant sited outside the RPA and spread by hand; and

8) Tree protection fencing to be erected in position for construction stage (post demolition position as shown on the **TPP**).

Removal of below ground Services within RPAs

2.32. Where possible, and after consultation with the supervising arboriculturist, it is preferable to leave redundant below ground services in RPAs to avoid damage to tree roots. Services within RPAs that require removal must be completed sensitively and by hand. The project Arboricultural Consultant will be informed where this is required, and a specific methodology will set-out before commencement.

No-dig Surfacing within RPAs

2.33. The **TPP (See Plan 3)** identifies where a no-dig construction method is required for surfacing within the RPAs of trees G3. Typically, this will adopt a cellular confinement system (example below), however, site conditions and circumstances may require the use of alternative products.

2.34. The design will take account of the bearing capacity of the soil and loading requirements. The detail of product and specification are technical engineering matters to be provided by the project engineer and product specialists. Design advice and detailed specifications can be provided by the following suppliers:

- Geosynthetics Ltd, 01455 617139, www.geosyn.co.uk
- Wrekin Products Ltd, 01543 440440, www.wrekinproducts.com
- Green Grid Systems, 01962 433460, greengridsystems.com

2.35. The final specification must meet the following design criteria for low-invasive surfaces to provide the conditions for continued tree survival and growth:

- Maintains oxygen diffusion through new surface to rooting area (5-12% by volume);
- Maintains sufficient passage of water to the rooting area (12-40% by volume);
- Maintains the high points of existing ground levels to avoid root damage (severance and/or asphyxiation);
- Avoids compaction by maintaining a soil structure sufficient to sustain root growth (soil bulk density below 1.4g/cc); and
- Is located no closer than 500mm to retained tree stems to allow for future growth.

2.36. Implementation of the surface must adopt the following arboricultural mitigation measures:

1) Ideally, the surface should be installed between May and October when the ground is driest and least prone to compaction;
2) Protection fencing will be temporarily removed / repositioned to provide access as shown on the **TPP**;
3) Ground preparation and setting out of the surface will be overseen by the project arboricultural consultant;

4) Machines must not be used to scrape or prepare the ground;

5) Removal of any turf layer vegetation by using a herbicide (as advised by a specialist) or manual removal with hand tools only. Shrubs and saplings are to be cut and ground out to just below ground level rather than grubbed or winched out;

6) If required, remove existing hard surfaces / structures in accordance with this document;

7) Retain all original ground levels after vegetation removal. No excavation into the soil is to occur;

8) Level area if necessary, by raising low spots with non-compacted washed sand. No excavation of high spots is to occur unless otherwise agreed with the project arboricultural consultant;

9) Install membrane, system and surface in accordance with manufacturers specification:

   a. Lay the cellular system over the Geotextile, which is secured open under tension during the infill process with steel staples or pegs;

   b. Install kerbs and edgings directly on top of existing soil grade level. For light structures, a treated peg and board may be acceptable. For more substantial structures, railway sleepers, haunched concrete with road pins, drilled kerbstones, gabions or cast in situ kerbs will be appropriate;

   c. Fill the cellular system ensuring any machinery works only on already filled areas. Typical infill consists of no fines angular granular material 20-40mm, which will remain un-compacted; and

   d. Install porous wearing surface.

2.37. If ground levels are to be raised more than 150mm this will be achieved by the use of a granular material, which does not inhibit vertical gaseous diffusion. For example: no-fines gravel, washed aggregate, structural soil (min. 20% sand content) or cobbles.

Level increasing within the RPAs

2.38. At no point is plant machinery to be sited on exposed ground within RPAs.

2.39. The area within the RPAs is to be <u>increased only</u>. At no point is soil to be reduced past the existing levels.

2.40. Ground levels raising in the RPAs of trees will adopt the following tree protection measures / stages:

1) Ensure main tree protection fencing is installed;

2) Excavator to be placed outside RPAs and use bucket to import soil into the RPA;

3) Banksman to be used to ensure digger dose not contact the retained trees;

4) Existing soil not to be disturbed or compacted, with soil only being added;

5) Soil to be spread by hand within RPAs and not compacted;

6) Soil is NOT to be piled against trunks of trees – a 500mm gap will be kept clear between the new soil and the trunk of the tree; and

7) Tree protection fence installed to its post levels position as shown on the **TPP**.

Installing of boundary fencing within RPAs

2.41. At no point is plant machinery to be sited on exposed ground within RPAs.

2.42. Installing fence posts within the RPAs of trees will adopt the following tree protection measures / stages:

1) Remove Tree Protection Fence to allow access to area;

2) Dig post holes using hand tools, avoiding damage to the bark covering larger roots. Roots smaller than 25mm diameter may be pruned back using either secateurs or a hand saw, leaving a clean cut;

3) Damage or severance of roots above 25mm diameter must be avoided. If roots of this size are discovered, the hole should be relocated. If there are a large number of such roots it may be necessary to relocate the hole by half a fence panels length and adjust the fence panels accordingly;

4) Line holes with non-porous membrane to prevent concrete leaching into soil;

5) Insert post and fill post hole with concrete to ground level; and

6) Install infill panel.

Soft landscaping within RPAs

2.43. All landscaping and associated ground preparation within RPAs will be carried out sensitively to ensure root damage is mitigated as much as is practicable. At no time is any heavy plant to be used within any protected area.

2.44. Removal of existing vegetation will be carried out by hand; turf may be removed using a mechanical turf stripper or by hand.

2.45. Soft Landscaping operations within RPAs will be conducted when no plant machinery is to be working on the site for the remainder of the build.

2.46. No Rotovators are to be used within the RPAs of retained trees.

Turfing within RPAs

2.47. Turfing operations within the RPAs of trees will adopt the following tree protection measures / stages:

1) Remove Tree protection fence to allow access to area;

2) Do not reduce high sport or conduct any excavations within RPAs;

3) Existing poor-quality turf may be removed with a turf striping machine;

4) Use good quality topsoil to level any low-lying areas and hollows and provide a fine tilth to lay turf on. This imported soil must not result in a level increase of more than 100mm in any area;

5) Import turves by hand or in wheelbarrow. Wheelbarrows should be tracked over scaffold boards to prevent soil compaction; and

6) Lay turves.

Planting

2.48. Should the existing soil be compacted or have a poor structure which may hinder the development of any new planting, soil decompaction techniques may be used upon consultation with the project arboriculturist.

2.49. Planting operations within the RPAs of trees will adopt the following tree protection measures / stages:

1) Remove Tree Protection fence to allow access to area;

2) Remove existing vegetation by hand;

3) Do not reduce any high spots or excavate in any way;

4) With the use of a wheelbarrow Import good quality topsoil into the area. level to a depth no more than 100mm with hand tools;

5) Dig individual planting pits for each plant by hand (including hedging which must not be trench planted); and

6) Any mulch should also be imported and spread by hand.

AMS 05- General Site Precautions

2.50. The following points must be observed during both advanced works and the construction process:

- The site compound area must be established outside of the unprotected RPAs prior to undertaking demolition and or construction works on-site, inclusive of any areas for materials storage, contractor parking and mixing must also be established outside of the RPAs;
- No fires will be lit on-site;
- Cutting down, uprooting, damaging or otherwise destroying any retained tree is prohibited;
- No access will be permitted inside RPAs unless under the guidance of a suitably qualified arboricultural consultant or otherwise stated within this AMS;

- No materials, equipment or debris will be stored within the RPA at any time unless otherwise stated within this AMS;

- If during demolition or construction, there are any excessive levels of dust build-up on retained trees then trees must be hosed down immediately with a clean water supply;

- Notice boards, telephone wires or other services must not be attached to any part of retained trees;

- Materials which will contaminate the soil (e.g. concrete, cement, chemical toilets, diesel oil, vehicle washings etc.) must not be permitted within, or close to RPAs of retained trees. Consideration must be given to any sloping ground on-site to ensure that contamination of soil in the RPA would not occur if there were spillage, see page or displacement elsewhere on-site. To avoid any associated damage or injury occurring to the trees as a direct result of contact with contaminants, works including cement mixing, re-fuelling and tool or machine washing will not be permitted within 20m uphill of any retained tree and

- Contamination of the soil by fuel and lubricant leaks must be avoided at all costs. If such a situation arises the project arboriculturist must be notified to assess the situation and prescribe remedial measures.

AMS 06 - Procedures for Incidents

2.51. If any breach of the approved tree protection measures occurs:

- The site manager must be informed immediately;

- The Local Planning Authority Tree officer (or other Planning Officer) must be informed, as well as the appointed project Arboriculturist at the earliest opportunity;

- Swift action must be taken to halt the breach and prevent any further breaches; and

- All preventative action and details of agreed remedial works must be recorded and reported to the LPA.

Appendix 1: Tree Survey Schedule

Tree Number	Common Species Name	Height (m)	Trunk Diameter and stem count	Crown Spread (m)				Height of Crown Clearance (m)	Age Class	Physiological Condition	Structural Condition	BS5837 Category	Comments/Preliminary Management Recommendations	RPA Radius (m)	Root Protection Area (m2)
				N	E	S	W								
T1	Hornbeam (Carpinus betulus)	8(2.5)	150(1)	1.50	1.50	1.50	1.50	2.50	Semi Mature	Fair	Fair	C12	Fair quality with some landscape value. Street tree on Highways/LA land. Roots restricted by hard surface. Crudely lopped.	1.8	10
T2	Hornbeam (Carpinus betulus)	8(2.5)	150(1)	1.50	1.50	1.50	1.50	2.50	Semi Mature	Fair	Fair	C12	Fair quality with some landscape value. Street tree on Highways/LA land. Roots restricted by hard surface. Crudely lopped.	1.8	10
G3	Wild Cherry (Prunus avium)	11.5(3)	330(1)	4.50	4.50	4.50	4.50	3.00	Semi Mature	Good	Fair	B12	Moderate quality and value. Roots restricted by hard surface. Tree located within raised bed. Scattered deadwood. Closely spaced group. Diameter is an estimated maximum.	4.0	49
T4	Silver Birch (Betula pendula)	11.5(3)	200,150(2)	4.50	3.00	4.50	4.50	3.00	Semi Mature	Good	Fair	B12	Moderate quality and value. Roots restricted by hard surface. Tree located within raised bed. Pruning wounds on stems. Scattered deadwood. Closely spaced group Diameter is an estimated maximum.	3.0	28
T5	Rowan (Sorbus aucuparia)	8(3)	150(1)	4.00	4.00	4.00	4.00	3.00	Semi Mature	Fair	Fair	C1	Fair quality with some landscape value. Roots restricted by hard surface. Tree located within raised bed. Pruning wounds on stems. Low vigour/poor extension growth. Diameter is an estimated maximum.	1.8	10
T6	Locust Tree (Robinia pseudoacacia)	12(3)	350(1)	7.00	6.00	6.00	3.00	3.00	Early Mature	Fair	Good	B12	Spindly habit. Twin stemmed from a height of approximately 2m, with one stem partially removed. Elongated form, likely attributed to competition from now removed adjacent tree.	4.2	55
H7	Hawthorn (Crataegus monogyna), Beech (Fagus sylvatica)	1(0)	100(1)	1.00	1.00	1.00	1.00	0.00	Semi Mature	Fair	Fair	C1	Length of managed hedgerow. Diameter is an estimated maximum.	1.2	5
T8	Beech (Fagus sylvatica)	8(2)	150(1)	1.50	1.50	1.50	1.50	2.00	Semi Mature	Fair	Fair	C1	Semi mature tree located within hedgerow and subsequently not inspected in detail. Inaccessible: diameter estimated.	1.8	10
T9	Beech (Fagus sylvatica)	8(2)	150(1)	1.50	1.50	1.50	1.50	2.00	Semi Mature	Fair	Fair	C1	Semi mature tree located within hedgerow and subsequently not inspected in detail. Inaccessible: diameter estimated.	1.8	10

Tree Number	Common Species Name	Height (m)	Trunk Diameter and stem count	Crown Spread (m)				Height of Crown Clearance (m)	Age Class	Physiological Condition	Structural Condition	BS5837 Category	Comments/Preliminary Management Recommendations	RPA Radius (m)	Root Protection Area (m2)
				N	E	S	W								
T10	Hazel (Corylus avellana)	6(2)	75(5)	2.00	2.00	2.00	2.00	2.00	Semi Mature	Fair	Fair	C1	Tree located by eye on plan. Multistemmed from ground level, with several stems less than 75mm diameter. Located in a raised planter with rooting area likely restricted due to existing hard surfacing. Diameter is estimated average.	2.0	13
T11*	Silver Birch (Betula pendula)	9.5(5)	170(1)	2.00	2.00	2.00	2.00	5.00	Semi Mature	Fair	Fair	C1	Tree not located on topographical survey and therefore plotted by eye. Vegetation restricted access to inspect stem in detail. Elongated form, with tree growing through the canopy of adjacent tree T12. Roots are likely restricted by existing hard surfacing. Inaccessible: diameter estimated.	2.0	13
T12	Wild Cherry (Prunus avium)	9.5(5)	300(1)	4.00	7.00	6.50	6.00	5.00	Early Mature	Good	Fair	C1	Vegetation restricted access to inspect stem in detail. Unbalanced crown shape due to suppression from neighbouring trees. Roots likely restricted by existing hard surfacing. Inaccessible: diameter estimated.	3.6	41
T13	Wild Cherry (Prunus avium)	10(5)	300(1)	4.00	7.00	6.50	7.00	5.00	Early Mature	Good	Fair	C1	Vegetation restricted access to inspect stem in detail. Unbalanced crown shape due to suppression from neighbouring trees. Canopy has been crudely pruned in the past. Roots likely restricted by existing hard surfacing. Inaccessible: diameter estimated.	3.6	41
T14*	Wild Cherry (Prunus avium)	10(2)	200(1)	4.00	7.00	6.50	4.00	2.00	Semi Mature	Good	Fair	C1	Tree not plotted on topographical survey and thefore plotted by eye. Vegetation restricted access to inspect stem in detail. Unbalanced crown shape due to suppression from neighbouring trees. Canopy has been crudely pruned in the past. Roots likely restricted by existing hard surfacing. Inaccessible: diameter estimated.	2.4	18
T15	Wild Cherry (Prunus avium)	11(2)	320(1)	5.00	7.00	4.00	7.00	2.00	Semi Mature	Good	Fair	C12	Vegetation restricted access to inspect stem in detail. Evidence of uplift to kerb and hard surfacing around stem base. Elongated canopy over the site. Canopy has been crudely pruned in the past. Roots likely restricted by existing hard surfacing. Inaccessible: diameter estimated.	3.8	46

Tree Number	Common Species Name	Height (m)	Trunk Diameter and stem count	Crown Spread (m)				Height of Crown Clearance (m)	Age Class	Physiological Condition	Structural Condition	BS5837 Category	Comments/Preliminary Management Recommendations	RPA Radius (m)	Root Protection Area (m2)
				N	E	S	W								
G16*	Locust Tree (Robinia pseudoacacia), Silver Birch (Betula pendula), Rowan (Sorbus aucuparia), Wild Cherry (Prunus avium)	15(2)	450(1)	8.00	8.00	8.00	8.00	2.00	Early Mature	Good	Good	B2	Some trees not plotted on topographical survey and thefore plotted by eye. Trees located outsite the red line boundary and subsequently not inspected in detail. Western canopies of group encroaching onto adjacent building. Canopy has been crudely pruned in the past. Roots likely restricted by exisitng hard surfacing.	5.4	92

Appendix 2: Signage Example

Note: Digital A4 copies can be obtained via contacting Tyler Grange.

Appendix 3: Arboricultural Works Audit

Works Requiring Supervision	Tree or Group No.	Date Completed and Report to LPA
Pre-commencement onsite meeting with project Arboriculturist and Site Manager to discuss tree protection measures throughout demolition and construction phases	N / A	
Spray marking of tree removals as identified Tree Retention and Removal Plan (15264/P03a) and detailed within the Arboricultural Method Statement.	T1 (Hornbeam); T8 & T9 (Beech); T10-T15 (Wild Cherry) H7 (Beech)	
Inspection of tree pruning works as identified on the Tree Protection Plan (15264/P04) and detailed within the Arboricultural Method Statement.	G16 (Mixed)	
Spray marking of or inspection barrier position as identified on the Tree Protection Plan (15264/P04) and detailed within the Arboricultural Method Statement prior to occupation of site for demolition / construction purposes.	T4 (Silver Birch) T5 (Rowan) T6 (Locust) G3 (Wild Cherry)	
Temporary / secondary repositioning of tree protection barriers as identified on the Tree Protection Plan (15264/P04) and detailed within the Arboricultural Method Statement.	T4 (Silver Birch) T5 (Rowan) T6 (Locust) G3 (Wild Cherry)	
Supervised removals of existing hard-surfacing / built structures within or adjacent to RPAs as identified on the Tree Protection Plan (15264/P04) and detailed within the Arboricultural Method Statement.	T4 (Silver Birch) T12 (Wild Cherry) G3 (Wild Cherry) G16 (Mixed)	
Supervision during construction of above soil surfacing within RPAs as identified on the Tree Protection Plan (15264/P04) and detailed within the Arboricultural Method Statement.	G3 (Wild Cherry)	
General site inspection (monthly basis recommended unless otherwise agreed with LPA) as detailed within the Arboricultural Method Statement.	All retained trees	

Appendix 4: Report Limitations and Tree Legislation

Limitations of Survey

A4.1 The comments made are based on observable factors present at the time of inspection. Although the health and stability of trees in their current context is an integral part of their suitability for retention, it must be understood that this report is not a tree risk assessment and should not be construed as such. While every attempt has been made to provide a realistic and accurate assessment of the trees' condition at the time of inspection, it may have not been appropriate, or possible, to view all parts or all sides of every tree to fulfil the assessment criteria of a risk assessment.

A4.2 No tree can be considered entirely safe, given the possibility that exceptionally strong winds could damage or uproot even a mechanically 'perfect' specimen. It is therefore usually accepted that hazards are only recognisable from distinct defects or from other failure-prone characteristics of the tree or the site. An assessment of the potential influence of trees upon existing buildings or other structures resulting from the effects of trees upon shrinkable load-bearing soils or the effects of incremental root or branch growth, are specifically excluded from this report.

Un-assessable Risks

A4.3 Any alteration to the application site or development proposals could change the current circumstances and may invalidate this report and any recommendations made. Detail of the site's logistical issues (e.g. site storage and the construction programme) may not be finalised until after consented development. As this report has been prepared in advance of consent, some of its contents may need to be updated as more specific information becomes available once the post-consent project management commences. Although this document will remain the primary legal reference in the event of any disputes, some of its content may be superseded by authorised post-consent amendments.

A4.4 The Wildlife and Countryside Act (WCA) 1981 (as amended) makes it an offence to disturb nesting birds or recklessly endanger a bat or its roost. Bats are also a European protected species and are additionally protected under the Conservation (Habitats & c) Regulations 1994 and 2010 (as amended). The survey findings, constraints, opportunities and design or mitigation recommendations included within that report must be read alongside this document.

A4.5 A lack of recommended work does not imply that a tree does not pose an unacceptable level of risk and likewise, it should not be implied that a tree will present an acceptable level of risk following the completion of any recommended work.

Statutory Designations Relating to Arboriculture

A4.6 A TPO is a written order made by a local planning authority (e.g. a borough, district or unitary council or a national park authority) which, in general, makes it an offence to cut down, top, lop, uproot, wilfully damage or wilfully destroy a tree protected by that order without the authority's permission. If you deliberately destroy a protected tree, or damage it in a manner likely to destroy it, you could be liable to an unlimited fine. You could also be fined if you cause or permit such work. Other offences can lead to fines of up to £2,500.

A4.7 Trees in a conservation area that are not protected by an Order are protected by the provisions in section 211 of the Town and Country Planning Act 1990. These provisions require people to notify the local planning authority, using a 'section 211 notice', six weeks before carrying out certain work on such trees, unless an exception applies. The work may go ahead before the end of the six week period if the local planning authority gives consent. This notice period gives the authority an opportunity to consider whether to make an Order on the tree.

Plans:

Plan 1: Tree Constraints Plan (TCP), (15264/P02a)

Plan 2: Tree Retention and Removal Plan (TRRP), (15264/P03a)

Plan 3: Tree Protection Plan (TPP), (15264/P04)

Category B - Trees of Moderate Quality and Value

Category C - Trees of Low Quality and Value

RPAs Influenced by Existing Hard Surfacing

Root Protection Areas

Tree Shading Constraints

*Denotes trees and groups not identified on topographical survey. Locations approximated using measurements taken on site.

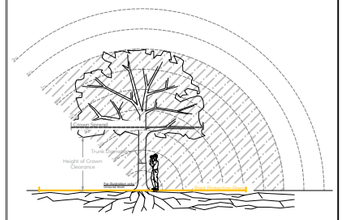

Rev	Description	Date
A	Additional Trees Added	19.04.2023

Tyler Grange

Head Office: Marsden Estate, Rendcomb, Cirencester, Gloucestershire GL7 7EX

E:info@tylergrange.co.uk

W: www.tylergrange.co.uk

Project title

MSP Greenheys

Drawing title

Tree Constraints Plan

Scale	1:500 @ A3	Drawn	WS
Date	05.04.2023	Checked	BV

Drawing number

15264_P02

Revision

A

0 20m

North

This document should not be relied on or used in circumstances other than those for which it was prepared and for which Tyler Grange was appointed.

Tyler Grange accepts no responsibility for this document to any other party other than the person by whom it was appointed.

Tyler Grange Group Limited
Copyright © Tyler Grange Group Limited 2023

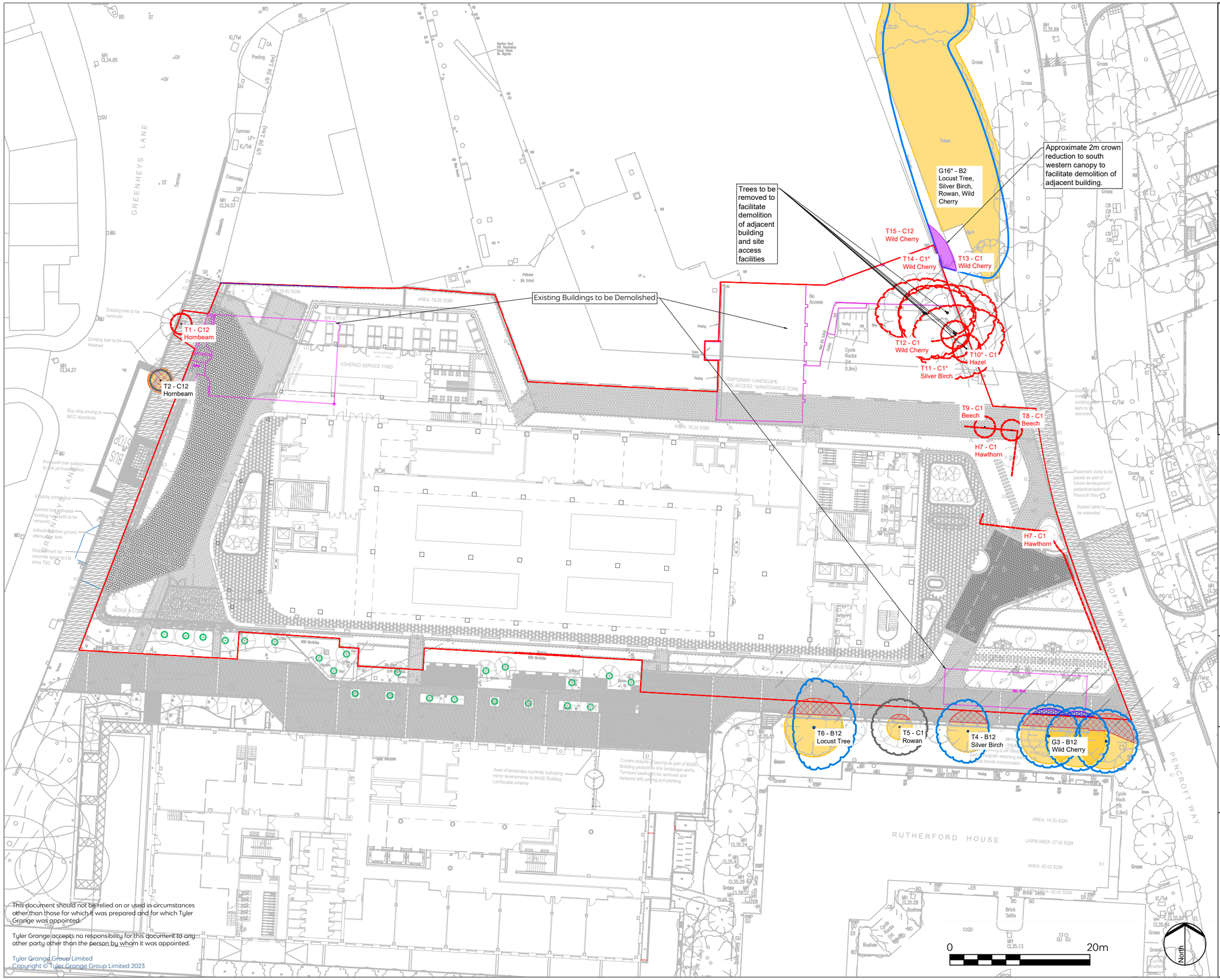

Application Boundary

Category B - Trees of Moderate Quality and Value

Category C - Trees of Low Quality and Value

Trees Proposed for Removal

Proposed Tree Pruning Works

Areas to be Constructed using a 'No Dig' Cellular Confinement System

RPAs Influenced by Existing Hard Surfacing

Root Protection Areas

Tree Shading Constraints

*Denotes trees and groups not identified on topographical survey. Locations approximated using measurements taken on site.

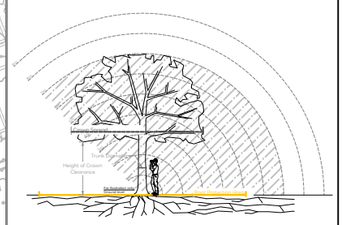

Rev	Description	Date
A	Red Line Boundary Update	19.04.2023

Tyler Grange

Head Office: Marsden Estate, Rendcomb, Cirencester, Gloucestershire GL7 7EX

E:info@tylergrange.co.uk

W: www.tylergrange.co.uk

Project title

MSP Greenheys

Drawing title

Tree Retention and Removal Plan

Scale	1:500 @ A3	Drawn	WS
Date	05.04.2023	Checked	BV

Drawing number

15264_P03

Revision

A

This document should not be relied on or used in circumstances other than those for which it was prepared and for which Tyler Grange was appointed.

Tyler Grange accepts no responsibility for this document to any other party other than the person by whom it was appointed.

Tyler Grange Group Limited
Copyright © Tyler Grange Group Limited 2023

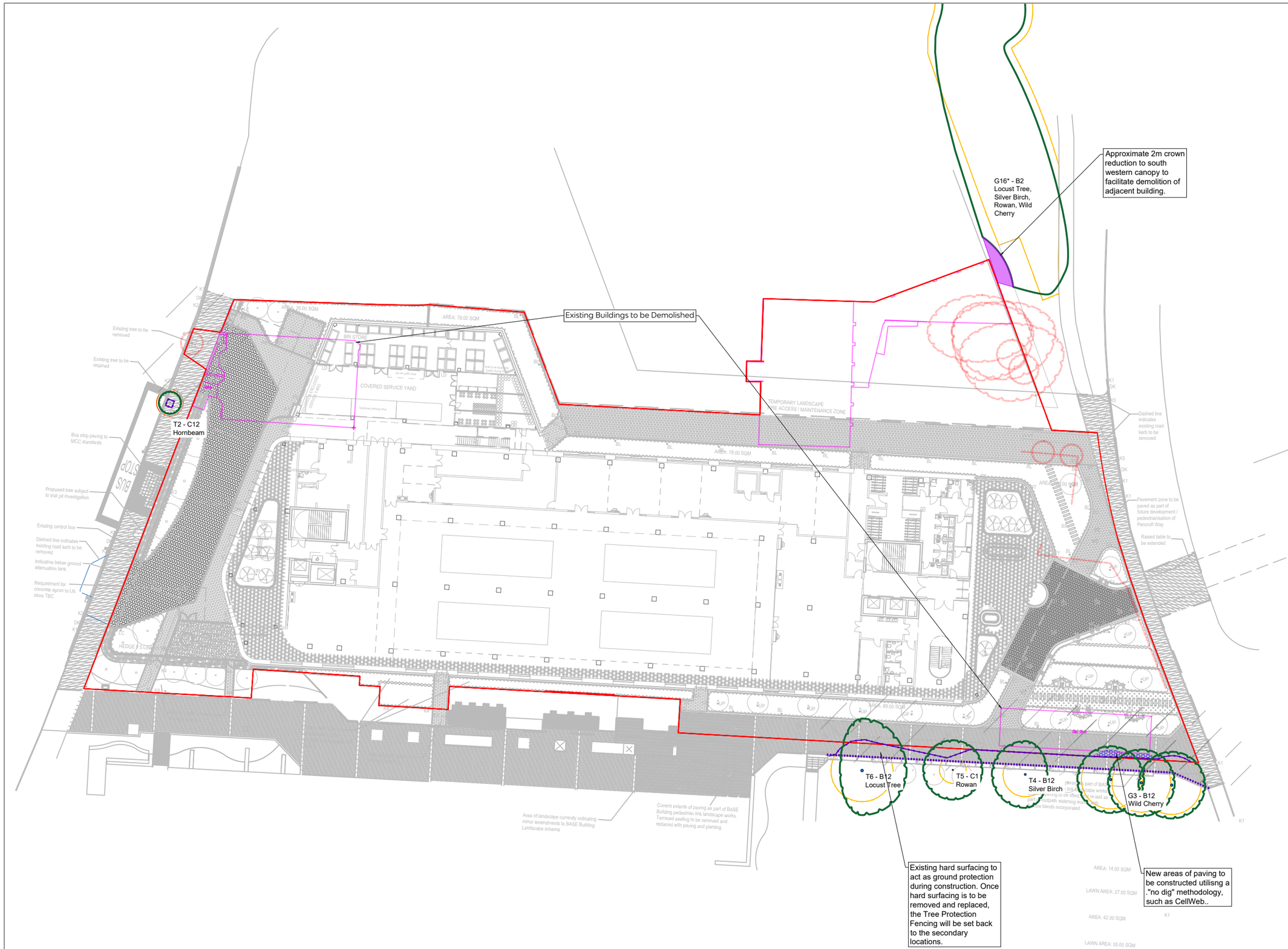

Survey Boundary

Retained Trees

Tree Protection Fencing

Secondary Locations for Protective Fencing

Areas to be Constructed using a 'No Dig' Cellular Confinement System

Proposed Pruning Works

Proposed Tree Removals

Root Protection Areas

Tree Shading Constraints

*Denotes trees and groups not identified on topographical survey. Locations approximated using measurements taken on site.

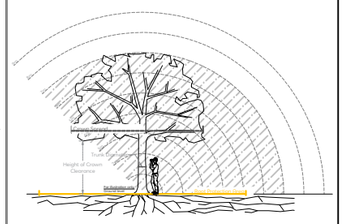

Rev	Description	Date
A	Red Line Boundary Update	19.04.2023

Tyler Grange

Head Office: Marsden Estate, Rendcomb, Cirencester, Gloucestershire GL7 7EX

E:info@tylergrange.co.uk
W: www.tylergrange.co.uk

Project title
MSP Greenheys

Drawing title
Tree Retention and Removal Plan

Scale 1:500 @ A3
Date 05.04.2023
Drawn WS
Checked BV

Drawing number 15264_P03
Revision A

This document should not be relied on or used in circumstances other than those for which it was prepared and for which Tyler Grange was appointed.

Tyler Grange accepts no responsibility for this document to any other party other than the person by whom it was appointed.

Tyler Grange Group Limited
Copyright © Tyler Grange Group Limited 2023

Step into our world

www.tylergrange.co.uk

Tyler Grange

Landscape | Ecology | Arboriculture