COLLYHURST VILLAGE
MANCHESTER

REMEDIATION STRATEGY

Job Number: LKC 20 1120
Date: January 2021
Client: Far East Consortium International

INCREASING LAND VALUE

LK GROUP

LK Consult Document Verification			
Site Address	Collyhurst Village, off Thornton Street North, Manchester, M40 7SU		
Report Title	Remediation Strategy		
Job Number	LKC 20 1120	**Document Ref.**	CL-602-LKC 20 1120-04
Date Issued	January 2021	**Report Version**	R1
Prepared By	Chris Hughes	**Signature**	C. Hughes
Reviewed By	Dr Paul Quimby	**Signature**	P. Quimby

Revision Record			
Revision No.	**Date**	**Nature of Revision**	**Approved By**
R1	28th Jan 21	Updated planning boundary and land use at Plot B.	P. Quimby

DISCLAIMER

This report has been prepared by LKC who have exercised such professional skill, care and diligence as may reasonably be expected of a properly qualified and competent consultant experienced in preparing reports of a similar scope.

However, to the extent that the report is based on or relies upon information contained in records, reports or other materials provided to LKC which have not been independently produced or verified, LKC gives no warranty, representation or assurance as to the accuracy or completeness of such information.

This report is prepared solely for the benefit of Far East Consortium International Limited. It may not be relied upon by, or submitted to a third party for their reliance for the purposes of valuation, mortgage, insurance and regulatory approval, until all invoices have been settled in full.

Those using this information in subsequent assessments or evaluations do so at their own risk.

CONTENTS

1	**INTRODUCTION**	**1**
2	**SUMMARY OF REMEDIATION AND VALIDATION REQUIREMENTS**	**4**
3	**SITE WIDE CONSIDERATIONS**	**6**
4	**PRE-CONSTRUCTION PHASE REMEDIATION WORKS**	**8**
5	**ON-CONSTRUCTION PHASE REMEDIATION WORKS**	**10**
6	**FURTHER WORK**	**15**

FIGURES

Figure 1: Site Location Plan
Figure 2: Site Boundary Plan
Figure 3: Proposed Development Plan
Figure 4: Site Investigation Location Plan
Figure 5: Elevated Contaminants Plan
Figure 6: Remediation Plan

APPENDICES

Appendix A: Remediation Validation Criteria (Soil)

1 INTRODUCTION

1.1 Background

LK Consult Ltd (LKC) has been commissioned by Far East Consortium International Limited to provide a Remediation Strategy for Collyhurst Village, Manchester.

The Remediation Strategy is required to determine the work necessary in order to ensure the site is "suitable for use" for the proposed residential development with regards to potential contaminated land pollutant linkages.

A summary of the site details is presented in Table 1-1. Figures 1 and 2 indicate the site location and boundary. Figure 3 indicates the proposed development.

Location	East of Rochdale Road in the Collyhurst area of Manchester. Centred at approximate National Grid Reference 385570E 400290N.
Area	4.7Ha
Topography	60 metres Above Ordnance Datum (AOD). Site is approximately level.
Land Use	Plot D - Far North Currently fenced off area accessed off Needwood Close. Tarmac roads still present but all buildings have been demolished. Plot C - North This parcel of land is vegetated with mature trees along the boundary with Rochdale Road in the west and several mature trees across the eastern half of this Plot. There is a noticeable area in the centre of this Plot which is mainly grassed and has no large trees. This Plot is separated from Plot D to the north by a footpath. Plot B - Centre Heavily vegetated area separated from Plot C to the north by Paget Street and from the Plot A to the south of the site by a footpath. Plot A - South Currently fenced off area accessed off Thornton Street North. Tarmac roads still present but all buildings have been demolished. Public Open Space Area to the east of Thornton Street North currently maintained grassland. SE Corner Currently occupied by residential properties.
Proposed Development	Residential end use including townhouses and duplex apartments.

Table 1-1 : Summary of site details.

1.2 Previous Reports

The following reports have previously been undertaken on the site by LKC and should be read in conjunction with this Remediation Strategy:

- Preliminary Risk Assessment (PRA) report, undertaken by LKC (Ref: LKC 20 1120B, dated 4th February 2020).
- Updated Preliminary Risk Assessment (PRA) report, undertaken by LKC (Ref: LKC 20 1120, dated August 2020). To incorporate the extended planning boundary.
- Phase 2 Site Investigation, Risk Assessment and Outline Remediation Strategy report, undertaken by LKC (Ref: LKC 20 1120, dated October 2020) and R1 January 2021.

In addition to the above, a Coal Mining Risk Assessment and Geotechnical Report have also been prepared for the site by LKC.

1.3 Summary of Previous Work

The key findings of the previous assessments and investigation work are summarised below. Previous site investigation locations are shown on Figure 4.

- Part of a watercourse and reservoir were historically located on site. The site has since undergone a number of phases of development including residential properties with associated streets, nursery, cinema, care home and welfare centre. An orchard and electricity sub-station have also been present on the site. A mound and cutting were also historically present.

- The site currently comprises rough open ground (no buildings) across the majority of the site, housing is present on the southern part of the site, roadways and remnant foundations remain on site.

- The investigation was carried out on 13th to 23rd July 2020 and included 18no. window sample boreholes, 4no. cable percussive boreholes, 33no. trial pits, 10no. trial trenches and 4no. rotary boreholes.

- Made ground varied significantly across the site and was recorded between depths of 0.40-13.50mbgl. In Plot A and in Plot D, outside of tarmacked areas, the made ground was predominantly gravelly sand comprising demolition rubble. Beneath the tarmac in Plot D cobbley sands and gravel of a MOT type material are present to between 0.65mbgl and 0.85mbgl.

- A significant thickness of ashy made ground was encountered across the site, predominantly in the east and with increasing thickness further to the east. It would appear that a large area of this site has been infilled prior to the 1890 mapping.

- With regards to visual or olfactory evidence of hydrocarbon or volatile contamination, slight hydrocarbon odour relating to large pieces of tarmacadam was identified in WS14B between 1.60-2.00mbgl. Sandstone cobbled setts (with bitumen coating) was noted in TP119 at 0.40-0.50mbgl.

- Elevated concentrations of metals (arsenic and lead) and PAHs were recorded in made ground across the site when compared to residential with plant uptake generic assessment criteria. In addition, one exceedance of residential without plant uptake criteria in the area of the proposed apartment block in Plot A. Locations of exceedances are shown on Figure 5.

- Exceedances were also recorded above POS_{resi} criteria for the proposed soft landscaping for PAHs and heavy end hydrocarbons. However, these were likely to be associated with discrete fragments of tarmacadam identified and were not considered to be representative of the soil matrix. Locations of exceedances are shown on Figure 5.

- Asbestos was identified in a small number of locations and was recorded as either chrysotile cement fragments or fibres/clumps (quantification of <0.001%).

- Gas monitoring was undertaken on six occasions over a three month period and maximum CO_2 concentrations of 13%v/v were recorded. Negligible concentrations of methane (maximum of 0.1%v.v) and flow rates (maximum of 0.2%v/v) were also recorded. The highest CO_2 concentrations were generally recorded in the area of the former infilled reservoir.

- A CS1 scenario was given for the site based on the worst case gas screening values from each location, but due to consistent elevated CO_2 concentrations (>5%v/v) in the east of Plot B, this area was uprated to CS2 and precautionary gas protection measures were recommended.

- Based on the relatively low controlled water sensitivity (Secondary A Aquifer, no groundwater abstractions within 250m), the risk to controlled waters was deemed to be low and no specific remediation for groundwater was recommended.

- Elevated concentrations of naphthalene and TPH fractions above very stringent UKWIR criteria were recorded in several locations on site and it was considered likely that barrier pipe would be required for the site subject to completion of a United Utilities Risk Assessment.

Based on the findings of the Phase 2 Geoenvironmental Investigation and Risk Assessment a number of pollutant linkages remain for the proposed development and therefore remediation works are considered necessary.

1.4 Aims and Objectives

In order to achieve the aims of the Remediation Strategy, the following objectives will be set:

- Maximise sustainability through the use re-use of existing site-won materials during ground works and development.
- Ensure that the design meets with current environmental and waste legislation.
- Use of appropriate environmental controls during the remediation and development programme.
- Segregate and stockpile differing materials for validation testing and appropriate re-use or offsite disposal.

The site remediation works will also include the treatment / removal / processing of geotechnical constraints to the proposed development including relic foundations and hardstanding. However, this is considered out with the scope of this Remediation Strategy.

2 SUMMARY OF REMEDIATION AND VALIDATION REQUIREMENTS

LKC consider the remediation works may be spilt in to the 'pre-construction' (or enabling works) phase and the 'on-construction' (i.e. during the residential development works) phase.

The following earthworks, remediation and validation required for this site are presented in Table 2-1. More detail of proposed works will be provided in the following Sections.

Phase	PL	Remediation Requirements	Validation Requirements
Pre-Construction	All	Post-demolition Trial Pitting in SE This is recommended to confirm ground conditions below the current buildings and allow delineation of areas of concern. This should allow a more targeted remediation strategy to be completed. This work will also provide more geotechnical information for foundation design.	N/A (Investigation Report will be provided with an updated Remediation Strategy).
		The bunded material will need to tested further before disposal in relation to LOD ACM identified in one sample (assumed disposal as site is to be reduced in levels). Appropriate asbestos management will be required by the Remediation Contractor before work commences.	Report results and provide disposal tickets as part of wider earthwork removal offsite.
	ALL	Earthworks Inspections / Unexpected Contamination The relevant contractors should be briefed that during development works at the site should any unusual ground conditions and / or visual or olfactory evidence of contamination (including asbestos containing material) be encountered at the site, LKC and the Local Authority should be informed, and further assessment of the material may be required. Material should be stockpiled and quarantined on visqueen and covered.	Log of work undertaken including photographs. Details of any sampling undertaken and validation of any potential additional remedial work.
On / Post--Construction	3	Gas Protection Measures required in Localised Areas (East of Plot B – see Figure 6) In line with CS2 as per UK guidance[1,2]. This is likely to / should include: • Passive subfloor or active subfloor ventilation system. • Methane and carbon dioxide resistant membrane installed as per manufacturer's instructions. • Ventilation of confined spaces within the building. • Well-constructed reinforced suspended, raft or cast in situ ground slab. • Minimum penetration of ground slab by services. • All joints and penetrations to be sealed. Depending on the type of building and foundation design the protection measures can vary. The gas protection measures will be detailed and approved with the Local Authority once the foundation design has been confirmed.	Supply and review of foundation designs. Photographic evidence of sub-floor void, ventilation and suitably sealed gas membrane. Validation of gas protection measures should be in line with CIRIA 735[3]

Table 2-1: Remediation and validation requirements
Note: PL = Pollutant Linkage

[1] CIRIA (2007). "Assessing Risks Posed by Hazardous Ground Gases to Buildings." CIRIA C665
[2] BSI (2015). "Code of Practice for the Design of Protective Measures for Methane and Carbon Dioxide Ground Gases for new buildings." BS8485:2015.
[3] CIRIA (2014). "Good Practice on the Testing and Verification of Protection Systems for Building Against Hazardous Ground Gas". CIRIA C735.

On / Post--Construction	**1 and 7**	Environmental Cover System (Residential with garden areas and soft landscaping around apartment block in Plot A- see Figure 6) As made ground is relatively deep, it is unlikely to be viable to remove the contaminated soils. Therefore, an environmental cover system is recommended. The environmental cover system should be as follows: **Private Back Gardens: 600mm thick environmental cover system comprising:** **Either** 100mm physical break layer (MOT type 1 material, 20-30mm, minimal fines) and at least 500mm comprising clean inert fill and sufficient topsoil for a growing medium. **Or** geotextile membrane and at least 600mm comprising clean inert fill and sufficient topsoil for a growing medium. **Private Front Garden / Shared Landscaping in Plot A: 450mm thick environmental cover system comprising:** **Either** 100mm physical break layer (MOT type 1 material, 20-30mm, minimal fines) and at least 350mm comprising clean inert fill and sufficient topsoil for a growing medium. **Or** geotextile membrane and at least 450mm comprising clean inert fill and sufficient topsoil for a growing medium. **Landscaping Around Apartment Block in Plot C and POS Area:** Topsoil Growing Medium (nominal cover if required) Although no contamination were at levels or in a matrix that could significantly harm key receptors in areas of landscaping around the apartment block in Plot C and POS area, the existing made ground is not expected to be a suitable growing medium given the nature of the soil and the undesirable material present (ash and brick). A minimal topsoil cover of approximately 150mm is recommended if to be undertaken.	Measuring depth of environmental cover system using a staff and providing photographic evidence. Photographic evidence of the granular physical break or geotextile layer will also be collected. Chemical validation of imported soils: See Section 5.3.
	5	Sulphate Resistant Concrete Sulphate Resistant Concrete in line with DS-2 AC-1s may be required in localised areas.	N/A
	6	Potable Water Pipes It is recommended that a Water Pipeline Assessment is undertaken once the location and depth of potable water pipes are known. It is likely that barrier pipe will be required.	Delivery Notes of Pipe Material or Photographs of the Installed Pipe.

Table 2-1 continued: Remediation and validation requirements
Note: PL = Pollutant Linkage

3 SITE WIDE CONSIDERATIONS

3.1 Construction Management Plan and Health and Safety

A Construction Management Plan and Method Statement should be produced which details appropriate Health and Safety measures to be employed during the site works.

Risks to site workers and adjacent receptors from contamination present in the site soils can be easily mitigated by good environmental management of the site during site works. Standard health and safety precautions (as per HSE guidance[4]) should be adopted by all workers involved with site enabling and construction works.

3.2 Asbestos Management

Due to the presence of asbestos containing material (1/54 in soil and 3no. visible pieces), it is recommended that additional precautions are taken during site clearance, earthworks and construction in the area of concern. The presence of asbestos in the made ground at the site presents a potential risk of generation of airborne fibres if this material is disturbed, such as for excavations to construct new foundations.

This risk can be managed by careful procedures and site monitoring to reduce the risk of airborne fibres, such as wetting techniques and it is recommended that an appropriate 'Asbestos Management Strategy' is developed and adopted for all intrusive ground works which disturb the made ground in the area of concern. This should be carried out in line with CIRIA C733.

This may include asbestos awareness training for all site staff, provision of suitable personal and respiratory protective equipment and air monitoring.

With regards to cement bound asbestos, this can be handpicked, doubled bagged and disposed of appropriately to a licenced landfill. Guidance on removing asbestos cement is described in HSE (2012).

If ACM is identified in soil arisings then soil should be placed directly into covered skips and disposed of at a suitable licenced landfill, after further testing to quantify the extent of asbestos contamination of the soils. It should be considered that blue asbestos is notifiable (if present) and must be removed by a licenced contractor.

Given that visible pieces of ACM were identified in TP104, TP18 and TP112, it is recommended that hand picking of the ACM is undertaken in these areas. The ACM should be doubled bagged and disposed of accordingly.

The JIWG model (presented in the Phase 2 SI report) identified this work to be classed as Non-Licensed Work (basic RPE and localised dust suppression) for the identified pieces of chrysotile cement and board. The soil ACM at the laboratory limits of detection was considered a negligible risk, where CAR did not apply.

Further risk assessment should be undertaken if any further asbestos containing material is encountered during the development works.

3.3 Materials Management

If materials are to be excavated and re-used on site or materials imported from another site a Materials Management Plan (MMP) will be required (depending upon the volume of material). This will refer to the proposed remedial and validation works as detailed in this

[4] HSE (1991). "Protection of Workers and the General Public During Development of Contaminated Land" London HMSO.

document and set out the proposals for re-use, off-site disposal and proposed import of materials for the development. The MMP will be refined as required following approval of the remedial strategy and as the site works progress. This will be produced following the determination of the earthworks strategy and movement volumes by the contractor. This work will be underpinned by the CL:AIRE Code of Practice using a Qualified Person. Upon completion of the works a separate MMP validation report will be produced.

An appropriate permit will be required to allow processing of recycled aggregate and the deployment notification should be presented to the Local Authority prior to commencement.

Re-use of material should be compliant with appropriate legislation. A U1 Standard Rule Permit (U1 exemption) can be registered and allow up to 1,000 tonnes (approximately 600m cube) of non-hazardous soil, up to 5,000 tonnes (approximately 3,000m cube) of material within construction and up to 50,000 tonnes (approximately 25,000m cube) of bitumous and road sub-base in the construction of roads.

A T5 Standard Rule Permit (T5 exemption) allows the screening and recovery of 5,000 tonnes (approximately 3,000m cube) of material, such as concrete or brick for re-use in construction.

Sampling of all re-used / imported material should ensure material is 'suitable for use' and should not be classified as waste (see Table 5-1).

3.4 Stockpile Management

Stockpiled material should be suitably managed. The source of each stockpile should be recorded and appropriate validation testing for the proposed re-use or potential offsite disposal should be undertaken as required. Depending on the nature of the material the potential for dust generation or release of asbestos fibres will be mitigated by dampening down and covering as required.

Material should be segregated by type and source. For example, construction / demolition arisings, site won topsoil and site won subsoil.

A quarantine area for suspect contaminated soils should established on site. This should comprise a Visqueen (or similar) lined area with a small bund to prevent run off and to minimise the risk of contaminating other areas of the site. The material should also be covered to minimise the generation of vapours, fibres, dust and possible nuisance to adjacent receptors, and to prevent rainwater ingress which may mobilise soluble contaminants.

3.5 Disposal

If any made ground or natural material is required to be removed from site this should be undertaken under an appropriate duty of care and the results of chemical analysis should be provided to a licensed landfill for confirmation of waste classification.

Waste records such as disposal tickets and waste carrier licences should be provided in the Site Completion Report.

The majority of the development site is considered non-hazardous waste with regards to disposal.

4 PRE-CONSTRUCTION PHASE REMEDIATION WORKS

An outline of the proposed pre-construction remediation earthworks is given in Table 2-1. The recommended remedial works and validation works are outlined in the following Sections.

All remediation and validation works will be undertaken in accordance with Manchester City Council guidance for developing on contaminated land[5].

4.1 Further Investigation in Currently Occupied Area

An area in the south east of the planning boundary is currently still occupied by residential housing. It is understood that this area will be developed at a later date, following the demolition of the existing houses. This area is proposed to be Parkland.

Prior to the commencement of development of this area, further site investigation is required and is expected to comprise, as a minimum, a phase of post demolition trial pitting.

The Remediation Strategy may need to be updated following further risk assessment once the results of the post demolition investigation are available.

4.2 Watching Brief / Unexpected or Gross Contamination

A watching brief will be maintained for evidence of contamination during the remediation earthworks and development works.

If evidence of contamination is identified then works in the area will stop pending further sampling and assessment and the Local Authority will be informed.

Delineation works will be undertaken and this may include collection of appropriate samples for laboratory analysis to further characterise the material and allow a risk assessment to be undertaken or removal of the impacted material to quarantine.

If obvious gross contamination is encountered then impacted soils will be carefully excavated and quarantined pending further testing and assessment.

Soil samples will be taken and analysed for a suite of contaminants, including *inter alia* Soil Organic Matter, VOCs, SVOCs, BTEX, TPHCWG and asbestos.

Soil samples should represent the impacted area and in order to determine that significantly impacted soils have been removed samples will be collected from the base and sides of the excavation.

After analysis quarantined material may be removed offsite to a licensed treatment facility or an assessment made of its potential for treatment and / or retention on site.

4.3 Processing of In-Ground Structures, Hardstanding and Oversize

In-ground structures such as relic foundations, relic slabs and hardstanding will be grubbed up and, along with oversize material from the made ground. This material is likely to be subjected to segregation, stockpiling and processing for reuse on site below roadways, path and driveways and around plots as a construction or pile mat.

[5] Ref: Manchester City Council (2016) 'Planning Guidance in Relation to Ground Contamination: Guidance Note for Applicants, Developers, Land Owners and Consultants'.

The material generated will comprise an engineered capping material (nominally 6F2 specification). It should be noted that any geotechnical improvement works are out with the scope of this Remediation Strategy.

These works will have suitable control measures to prevent the release of dust.

4.4 Segregation & Stockpiling of Made Ground for Validation / Reuse

Potentially suitable site won material will be stockpiled separately for potential reuse as topsoil and subsoil and suitable processed material will be stockpiled for potential reuse as a break layer or no-dig layer within the capping layers in gardens.

In order to assess the suitability of such materials each stockpile / type of material will be subjected to validation sampling and testing. The sampling suites, requirements and frequencies are summarised in Table 5-1. Validation criteria for topsoil, subsoil and the break layer, with justification for their use, are outlined in Section 5.3.

The destination of each stockpile / source of material will be recorded and reported in the pre-construction validation report.

5 ON-CONSTRUCTION PHASE REMEDIATION WORKS

5.1 Introduction

The scope of the on-construction remedial works will comprise the following (see Figure 6):

- Suitable Environmental Cover Layer in private garden areas, where residential houses are to be constructed.
- Suitable Environmental Cover Layer in shared landscaping around the apartment block in Plot A.
- Gas protection measures to CS2 level in a section of Plot B.
- United Utilities risk assessment for potable water pipes and installation of barrier pipes, as required.

Further details are given in the following Sections.

LKC recommend that the proposed works are prior approved by the regulators (and United Utilities, as required) prior to the commencement of construction works.

Once this strategy is approved, a Remediation Statement and Validation Checklist will be provided to the relevant parties on site which summarises the required remedial works and trigger points for inspections and validation works.

5.2 Environmental Cover Layer to Gardens and Soft Landscaping Areas

Given the existing contamination testing data, an environmental cover layer of at least 600mm is required in all private rear gardens. A typical construction detail is provided below:

PRIVATE REAR GARDENS

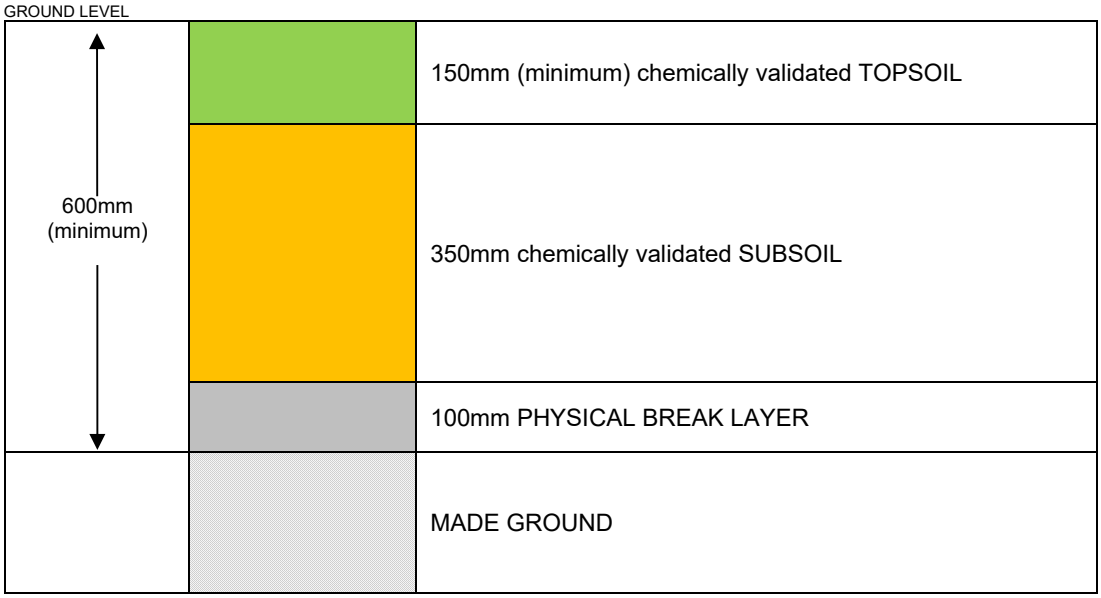

If suitable break layer material is not available, then the break layer will be substituted for separation geotextile and the subsoil / topsoil depth increased by 100mm to maintain the required capping layer material depth.

FRONT GARDENS/SHARED LANDSCAPING AROUND APARTMENT BLOCK A

A minimum clean capping layer of 450mm is required for private front gardens, any communal soft landscaping around the residential houses and the shared landscaping around the apartment block in Plot A. A typical construction detail is provided below:

GROUND LEVEL

450mm (minimum)		150mm (minimum) chemically validated TOPSOIL
		200mm chemically validated SUBSOIL
		100mm PHYSICAL BREAK LAYER
		Existing MADE GROUND

If suitable break layer material is not available, then the break layer will be substituted for separation geotextile and the subsoil / topsoil depth increased by 100mm to maintain the required capping layer material depth.

No specific capping layer is required in the soft landscaping around the apartment block in Plot C or the POS area, although a nominal cover of 150mm of topsoil as a growing medium is recommended if any ground improvements are to be undertaken in these area.

5.3 Validation of Subsoil, Topsoil and Physical Break Layer Materials

Chemical validation of all site won and any imported soils and any recycled stone to be used on site in the environmental capping layers and/ or infrastructure should be undertaken. Imported soils should be accompanied by a certificate of analysis and source details.

A summary of the required imported material sampling requirements are presented in Table 5-1.

Ideally, the material should be sampled at source to prevent double handling if soil fails, with confirmatory sampling undertaken on importation to site as per the Manchester City Council guidance.

Material Type	Source	Suite of Analysis	Sampling Rate (min. 3 per source) *		
			Garden	Landscape	Other **
Topsoil / subsoil / Fill material	Greenfield	Suite A	200m^3	200m^3	200m^3
	Remediated	Suite A / B dependent upon original SI	100m^3	150m^3	200m^3
	Brownfield / Unknown	Suite B	50m^3	150m^3	200m^3
Quarried Fill	First Generation i.e. quarried sand (subsoil) or stone (break layer)	No testing is required. Certification of material provenance is required.			

Table 5-1: Sampling requirements for imported soils.

Notes:

Suite A - Heavy metals, pH, water soluble sulphate, speciated PAH, soil organic matter and asbestos screen.

Suite B - Heavy metals, pH, water soluble sulphate, speciated PAH, phenol, total and free cyanide, soil organic matter, asbestos screen, banded petroleum hydrocarbons (TPH CWG), BTEX, MTBE.

** Other assumed to be stone / 6F2 etc.

Remedial targets will be based upon the following hierarchy:

- Category 4 Screening Levels (C4SLs).
- LQM Suitable 4 Use Levels (S4ULs).
- ATRISK Soil Screening Values (SSVs) and CL:AIRE Generic Assessment Criteria (GACs).

C4SLs were published in 2013[6,7]. The recent change to the contaminated land guidance has changed the evaluation of risk from 'minimal' (referred to as Health Criteria values (HCVs))[8] used to generate Soil Guideline Values (SGVs) to 'low' (referred to as Lowest Level of Toxicological Concern (LLTCs)). The policy companion document and supporting letter by Defra, dated 3rd September 2014, states that C4SLs *'could be used under the planning regime, as well as within Part 2A'.* Based on these comments LKC considers the justifications and assumptions used to generate 'low' risk are suitable for the planning regime.

Where no C4SLs have been generated LKC will use the LQM S4ULs[9]. Similar assumptions and land uses to C4SLs have been used. However, toxicological information has been based on 'minimal risk' as per previous guidelines and assumptions[10,11,12,13].

If contaminants are not present as C4SLs and S4ULs then LKC will use ATRISK SSVs or CL:AIRE GACs[14]. These follow the 'minimal' risk principal and more stringent exposure parameters and will be conservative.

LKC consider the main risk drivers for PAHs are benzo(a)pyrene (B(a)P) and naphthalene. This is due to B(a)P possibly being a carcinogen and most toxic of the PAHs[15,16] and

[6] Defra (2014). "SP1010: Development of Category 4 Screening Levels and Assessment of Land Affected by Contamination – Policy Companion Document."
[7] CL:AIRE (2013). "SP1010: Development of Category 4 Screening Levels and Assessment of Land Affected by Contamination – Final project Report."
[8] EA (2008). "Human Health Toxicological Assessment of Contaminants in Soils." Science Report – SC050021/SR2.
[9] LQM (2014). "The LQM/CIEH S4ULs for Human Health Risk Assessment."
[10] EA (2008). "Updated Technical Background to the CLEA Model." Science Report – SC050021/SR3.
[11] EA (2008). "Human Health Toxicological Assessment of Contaminants in Soils." Science Report – SC050021/SR2.
[12] EA (2008). "A Review of Body Weight and Height Data used within the Contaminated Land Exposure Assessment Model (CLEA)." Project SC050021/Technical Review 1.
[13] EA (2009). "Compilation of Data for Priority Organic Pollutants for Derivation of Soil Guideline Values." Science report SC050021/SR7.
[14] CL:AIRE (2009). "The Soil Generic Assessment Criteria for Human Health Risk Assessment."
[15] EA (2002). "Contaminants in Soils: Collation of Toxicological Data and Intake Values for Humans. Benzo[a]pyrene." R&D Publication TOX2.
[16] USEPA (1984). "Health Effects Assessment of Polycyclic Aromatic Hydrocarbons (PAHs). EPA 540/1-86-013."

naphthalene the most volatile and soluble[17]. The new C4SLs indicate B(a)P as a surrogate marker for carcinogenic PAHs, if it falls within appropriate limits, since the risk from other non-carcinogenic PAHs are considered negligible[18]. For B(a)P to be used as a surrogate marker it should follow the profile described by the HPA (2008)[19] and CL:AIRE (2013). Naphthalene will be treated separately using the LQM S4ULs.

The proposed development comprises a mix of houses with private gardens and apartments with areas of soft landscaping and POS. Therefore, the assessment criteria for 'residential with homegrown produce' will be used for the environmental capping layer in the housing development and 'residential without homegrown produce' criteria will be used for any soil to be used in soft landscaping around the apartments and any soft landscaping across the site. If soil is to be placed as a nominal cover in the POS area then soil will be compared to POS_{resi} soil criteria (although not expected to be undertaken).

All criteria have been generated using the CLEA V1.06 model[20] based on 1%, 2.5% and 6% Soil Organic matter (SOM). Where appropriate, results will be compared to the nearest appropriate SOM.

A summary of the remediation validation criteria is provided in Appendix A.

Any soil with visual or olfactory evidence of hydrocarbons or asbestos containing material should be rejected.

In addition, it should be ensured that the matrix of the topsoil is suitable as a growing medium and no undesirable material is present (in line with BS3882[21]). This should be the responsibility of your designated soil supplier.

Validation testing certificates shall be collated and included in the Validation Report.

5.4 Capping Layer Depth Validation

Photographic evidence of the correct construction and appropriate depth of the capping layer shall be collected for inclusion in the Validation Report.

5.5 Gas Risk Mitigation

Gas monitoring results indicate that a majority of the site does not require gas protection measures. However, due to elevated carbon dioxide (>5%v/v) recorded in the area of the former infilled reservoir (albeit at negligible flow rates), precautionary gas protection measures commensurate with the CS2 as per UK guidance[4] should be provided in the east of Plot B. The area requiring gas protection measures is shown on Figure 6.

The minimum gas protection measures required are:

- Vented sub-floor void.
- Gas membrane to protect against CO_2.
- Minimum penetration of ground slab by services.
- All joints and penetrations to be sealed.
- Ventilation in confined spaces

[17] EA (2003). "Review of the Fate and Transport of Selected Contaminants in the Soil Environment." Draft technical report P5-079/TR1.
[18] CL:AIRE (2013). "SP1010: Development of Category 4 Screening Levels and Assessment of Land Affected by Contamination – Final project Report."
[19] HPA (2010). "HPA Contaminated Land Information Sheet: Risk Assessment Approaches for Polycyclic Aromatic Hydrocarbons (PAHs)." Version 3.
[20] EA (2008). "CLEA Software (Version 1.05) Handbook." Science Report – SC050021/SR4.
[21] BS (2015). "Specifications for Topsoil and Requirements for use." BS3882:2015.

Gas protection membranes should be fitted to the manufacturer's specification and using the recommended supplementary components e.g tapes, top hat covers.

LKC advise that the foundation design drawings and membrane specification are provided to the Local Authority for approval, once known.

5.6 Validation of Gas Protection Measures

As per the requirements of BS8485[5], validation of gas protection membrane installation is required by a suitably qualified person. Validation of gas protection measures will be undertaken at the site with recourse to relevant guidance such as CIRIA C735[6].

The independent validation of gas protection measures will involve site attendance to check the following on a plot by plot basis:

- Integrity of installed membranes – to confirm that no punctures or tears are present.
- Membrane overlaps – sufficient overlap and bonding.
- Service Entries – to confirm the use of preformed top hat covers and these are appropriately sealed.
- Wall Cavity Inspection – to ensure the proprietary gas membrane forms a
- continuous barrier across cavities.
- Evidence of a ventilated sub-floor void e.g air bricks.

The records of gas protection measure validation should include photographic evidence of suitable workmanship and evidence of the above checks. If possible, evidence of specific product types such as photographs or delivery tickets should also be collected to add robustness to the validation process.

It should also be noted that there is an onus on the developer to sufficiently protect the gas membranes following validation works. Construction activities such as the placement of floor slab reinforcement have the potential to damage protective membranes.

5.7 Potable Water Supply Pipes

A UU risk assessment should be completed once the pipe routes and depths are known. It is likely that barrier pipe will be required for some parts of the site.

In the likely event that barrier pipe is required then the risk assessment should be approved by UU prior to any installation works. It should be noted UU would not connect site potable pipework to the main supply unless satisfied the correct pipework had been installed.

For the purposes of the Validation Report photographs illustrating the installation of barrier pipe are recommended.

6 FURTHER WORK

Following the further site investigation in the south east of the site, an addendum site investigation and risk assessment report will be required. The remediation strategy for the development may also need updating depending on the findings of the additional site investigation.

Following completion of the development, a final validation report detailing the remediation works will also be required which will include:

- Validation of gas protection measures installed
- Provision of waste transfer documents.
- Environmental capping layer: Validation of environmental cover systems in gardens and soft landscaping, where required.
- Verification testing of all imported soil for garden and soft landscaping areas.
- Information on the installation of protective pipes.
- Details of any unexpected contamination identified onsite, suitably risk assessed and / or validated.

The aim of the final validation report will be to demonstrate to the Local Authority that the site has been suitably remediated to the extent that the site is suitable for its proposed residential end use and, in accordance with the National Planning Policy Framework (NPPF)[22]:

- The site is suitable for its new use taking account of ground conditions and land instability, including from natural hazards or former activities such as mining, pollution arising from previous uses and any proposals for mitigation including land remediation or impacts on the natural environment arising from that remediation;
- After remediation, as a minimum, land should not be capable of being determined as contaminated land under Part IIA of the Environmental Protection Act 1990; and,
- Adequate site investigation information, prepared by a competent person, is presented.

[22] DCL (2019). “National Planning Policy Framework.” Department of Communities and Local Government.

FIGURES

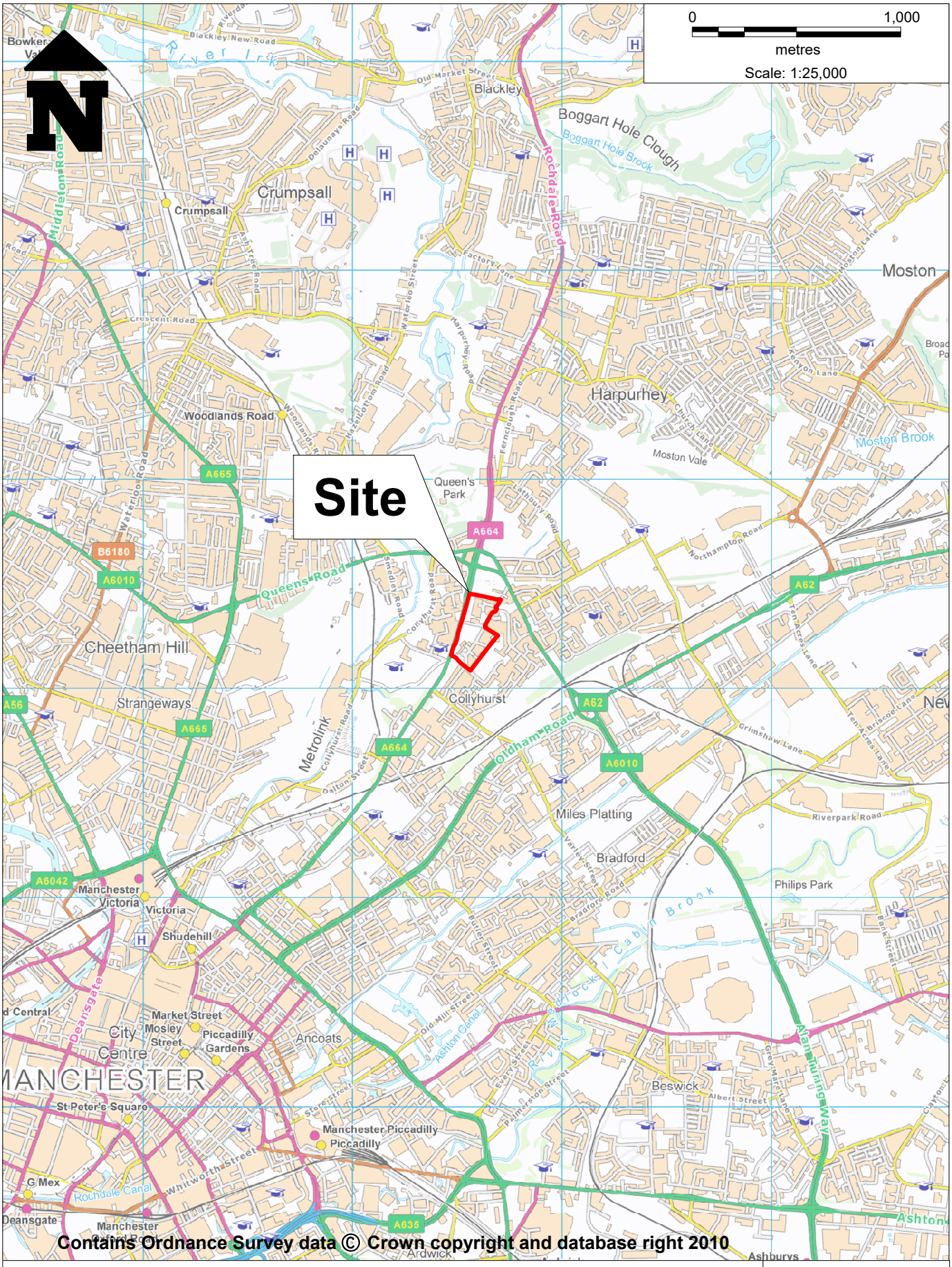

Figure 1: Site Location Plan, Collyhurst Village, Manchester

Drawn: January 2021 Scale: 1:25,000 @ A4 (see scale bar)

LK CONSULT LIMITED

KEY

- Planning Boundary
- Development Area
- Public Open Space
- Proposed Public Open Space - to be Investigated Once Unoccupied

Sampling Locations and features annotated by LK Consult Ltd are approximate and are based upon observed measurements unless otherwise stated. Do not scale from this drawing and work from marked dimensions only. All dimensions and features should be confirmed on site by the Contractor. Where this drawing includes information provided to LK Consult Ltd by others, LK Consult Ltd gives no warranty, representation or assurance as to the accuracy of such information.

LK CONSULT LIMITED

Client:	Civic Engineers
Site:	Collyhurst Village, Manchester
Title:	Site Boundary Plan
Job No.:	LKC 20 1120
Scale (See Scale Bar):	See Scale Bar
Figure:	2
Revision:	
Drawn By:	AC
Checked By:	CH
Drawn:	Jan 2021

Extract from: Buttress
Drawing Ref: Existing Site Location Plan, No.(01)100, Rev:PL (26/01/2021)

Extract from: Buttress
Drawing Ref: Site Layout Plan, No.(04)706, Rev:PL (26/01/2021)

KEY

- Planning Boundary
- Plots
- Plot Identification

Sampling Locations and features annotated by LK Consult Ltd are approximate and are based upon observed measurements unless otherwise stated. Do not scale from this drawing and work from marked dimensions only. All dimensions and features should be confirmed on site by the Contractor. Where this drawing includes information provided to LK Consult Ltd by others, LK Consult Ltd gives no warranty, representation or assurance as to the accuracy of such information.

LK CONSULT LIMITED

Client:	Civic Engineers
Site:	Collyhurst Village, Manchester
Title:	Proposed Development Plan

Job No.:	Scale (See Scale Bar):	Figure:	Revision:
LKC 20 1120	See Scale Bar	3	

Drawn By:	Checked By:	Drawn:
AC	CH	Jan 2021

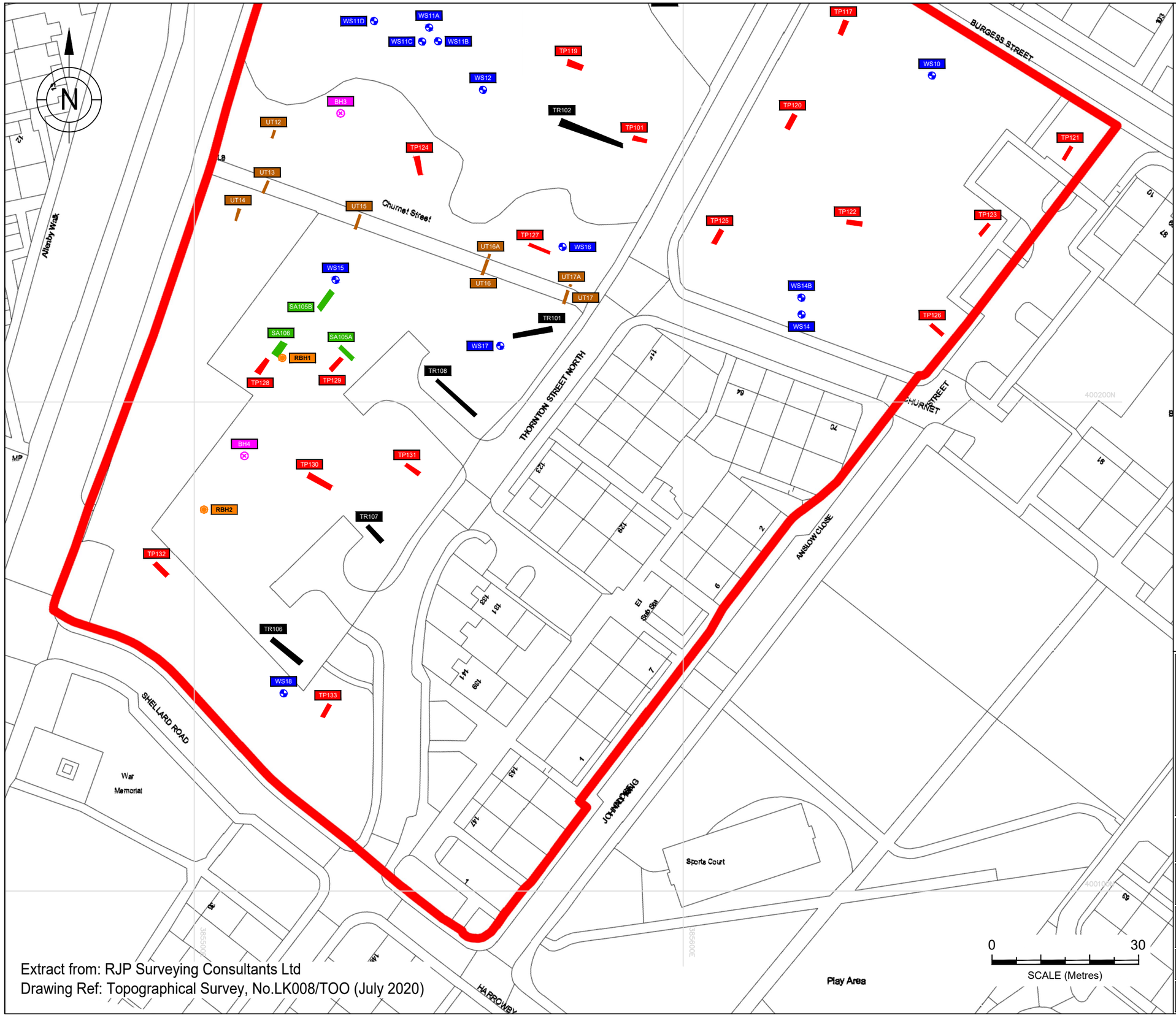

Extract from: RJP Surveying Consultants Ltd
Drawing Ref: Topographical Survey, No.LK008/TOO (July 2020)

KEY

- Site Boundary
- Cable Percussive Borehole (BH)
- Trial Pit with Soakaway Testing (SA)
- Trial Pit (TP)
- Trial Trench (TR)
- Utility Trench (UT)
- Window Sample Borehole (WS)
- Rotary Borehole (RBH)

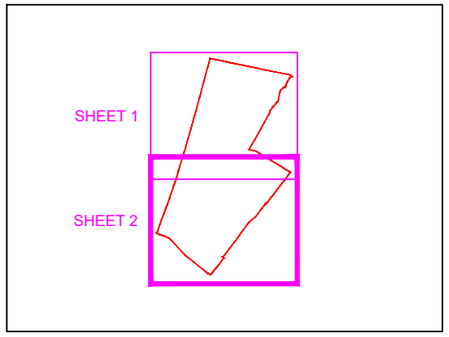

Sampling Locations and features annotated by LK Consult Ltd are approximate and are based upon observed measurements unless otherwise stated. Do not scale from this drawing and work from marked dimensions only. All dimensions and features should be confirmed on site by the Contractor. Where this drawing includes information provided to LK Consult Ltd by others, LK Consult Ltd gives no warranty, representation or assurance as to the accuracy of such information.

LK CONSULT LIMITED

Client:	Civic Engineers
Site:	Collyhurst Village, Manchester
Title:	Site Investigation Location Plan (Sheet 2)
Job No.:	LKC 20 1120
Scale (See Scale Bar):	See Scale Bar
Figure:	4
Revision:	
Drawn By:	AC
Checked By:	HM
Drawn:	Aug 2020

Extract from: RJP Surveying Consultants Ltd
Drawing Ref: Topographical Survey, No.LK008/TOO (July 2020)

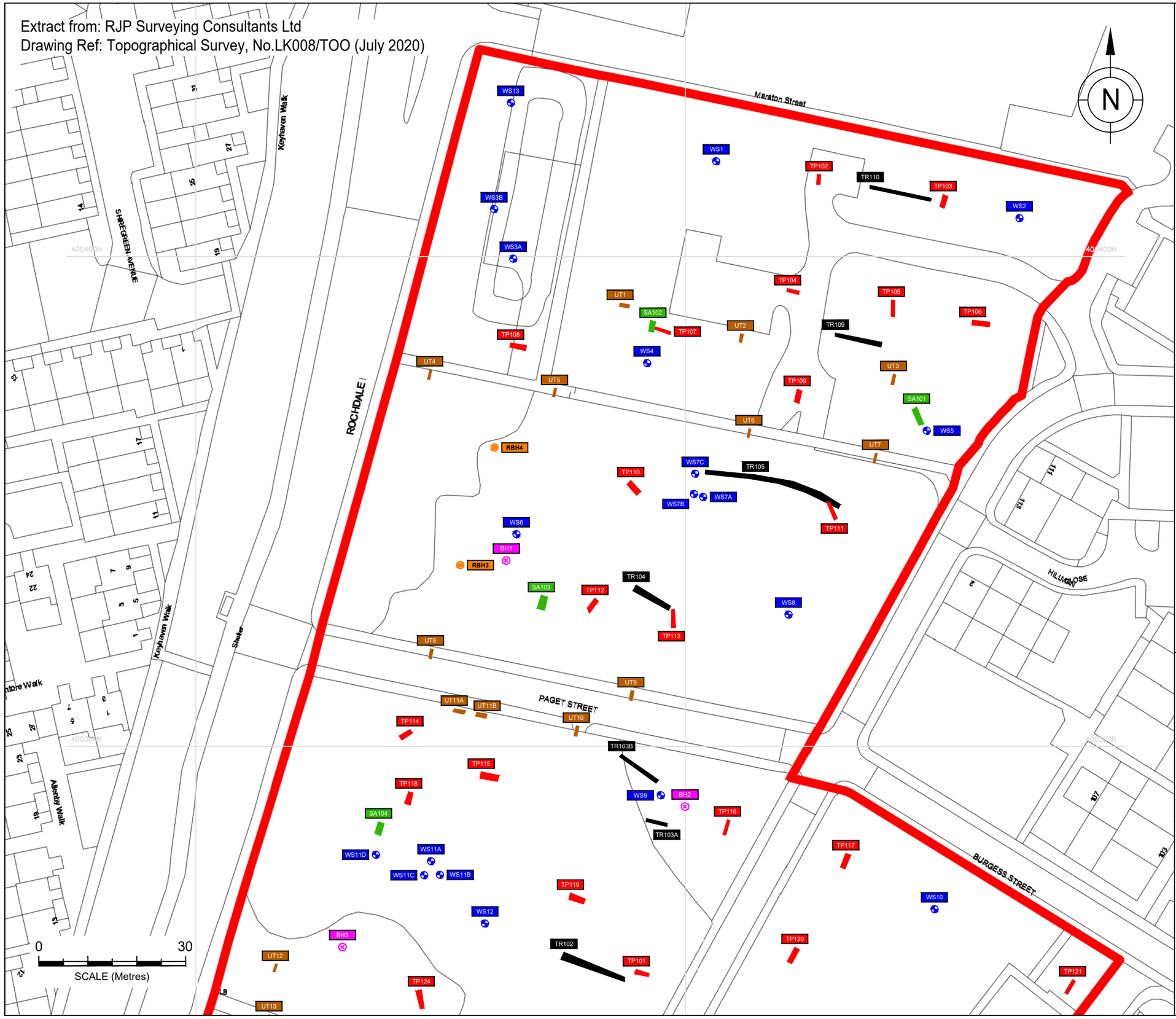

KEY

- Site Boundary
- Cable Percussive Borehole (BH)
- Trial Pit with Soakaway Testing (SA)
- Trial Pit (TP)
- Trial Trench (TR)
- Utility Trench (UT)
- Window Sample Borehole (WS)
- Rotary Borehole (RBH)

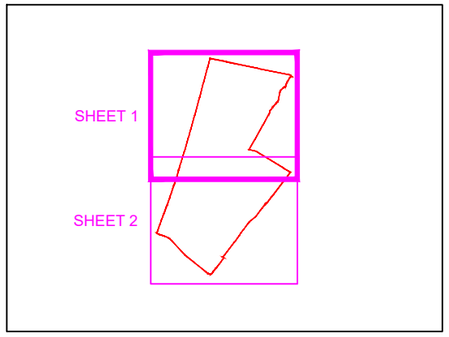

Sampling Locations and features annotated by LK Consult Ltd are approximate and are based upon observed measurements unless otherwise stated. Do not scale from this drawing and work from marked dimensions only. All dimensions and features should be confirmed on site by the Contractor. Where this drawing includes information provided to LK Consult Ltd by others, LK Consult Ltd gives no warranty, representation or assurance as to the accuracy of such information.

LK CONSULT LIMITED

Client: Civic Engineers

Site: Collyhurst Village, Manchester

Title: Site Investigation Location Plan (Sheet 1)

Job No.:	Scale (See Scale Bar):	Figure:	Revision:
LKC 20 1120	See Scale Bar	4	

Drawn By:	Checked By:	Drawn:
AC	HM	Aug 2020

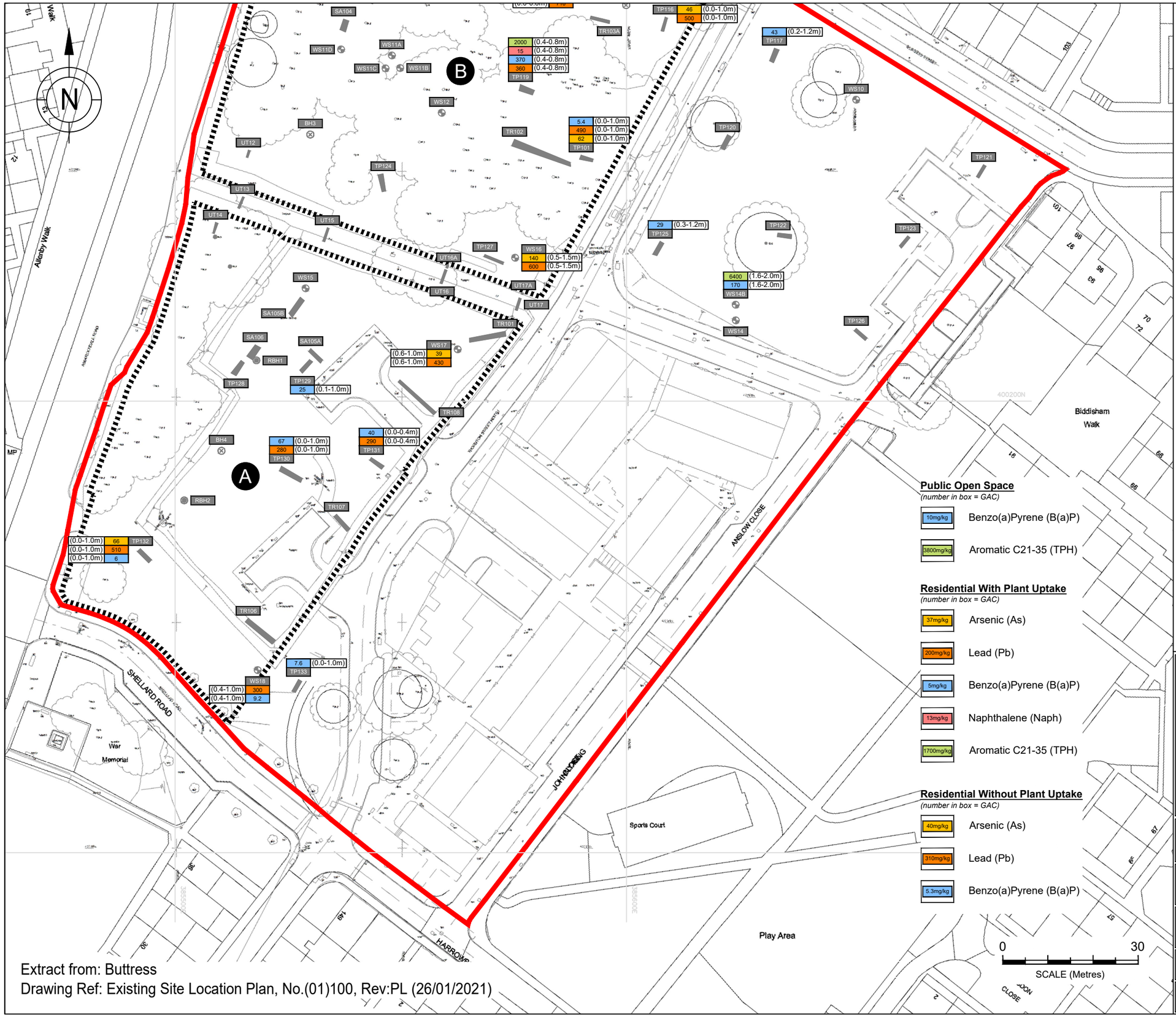

Extract from: Buttress
Drawing Ref: Existing Site Location Plan, No.(01)100, Rev:PL (26/01/2021)

KEY

- Site Boundary
- Plots
- Cable Percussive Borehole (BH)
- Plot Identification
- Trial Pit with Soakaway Testing (SA)
- Trial Pit (TP)
- Trial Trench (TR)
- Utility Trench (UT)
- Window Sample Borehole (WS)
- Rotary Borehole (RBH)
- ACM — Asbestos-Containing Material (ACM)

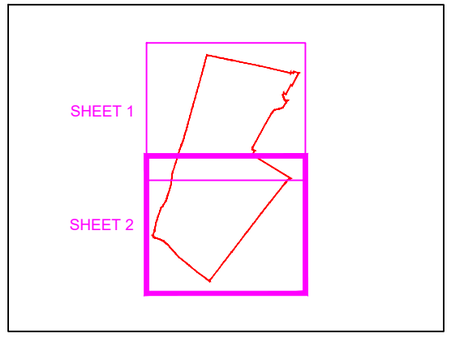

Sampling Locations and features annotated by LK Consult Ltd are approximate and are based upon observed measurements unless otherwise stated. Do not scale from this drawing and work from marked dimensions only. All dimensions and features should be confirmed on site by the Contractor. Where this drawing includes information provided to LK Consult Ltd by others, LK Consult Ltd gives no warranty, representation or assurance as to the accuracy of such information.

Public Open Space
(number in box = GAC)

- 10mg/kg — Benzo(a)Pyrene (B(a)P)
- 3800mg/kg — Aromatic C21-35 (TPH)

Residential With Plant Uptake
(number in box = GAC)

- 37mg/kg — Arsenic (As)
- 200mg/kg — Lead (Pb)
- 5mg/kg — Benzo(a)Pyrene (B(a)P)
- 13mg/kg — Naphthalene (Naph)
- 1700mg/kg — Aromatic C21-35 (TPH)

Residential Without Plant Uptake
(number in box = GAC)

- 40mg/kg — Arsenic (As)
- 310mg/kg — Lead (Pb)
- 5.3mg/kg — Benzo(a)Pyrene (B(a)P)

LK CONSULT LIMITED

Client:	Civic Engineers
Site:	Collyhurst Village, Manchester
Title:	Elevated Contaminants Plan (Sheet 2)
Job No.:	LKC 20 1120
Scale (See Scale Bar):	See Scale Bar
Figure:	5
Revision:	
Drawn By:	AC
Checked By:	CH
Drawn:	Jan 2021

Extract from: Buttress
Drawing Ref: Existing Site Location Plan, No.(01)100, Rev:PL (26/01/2021)

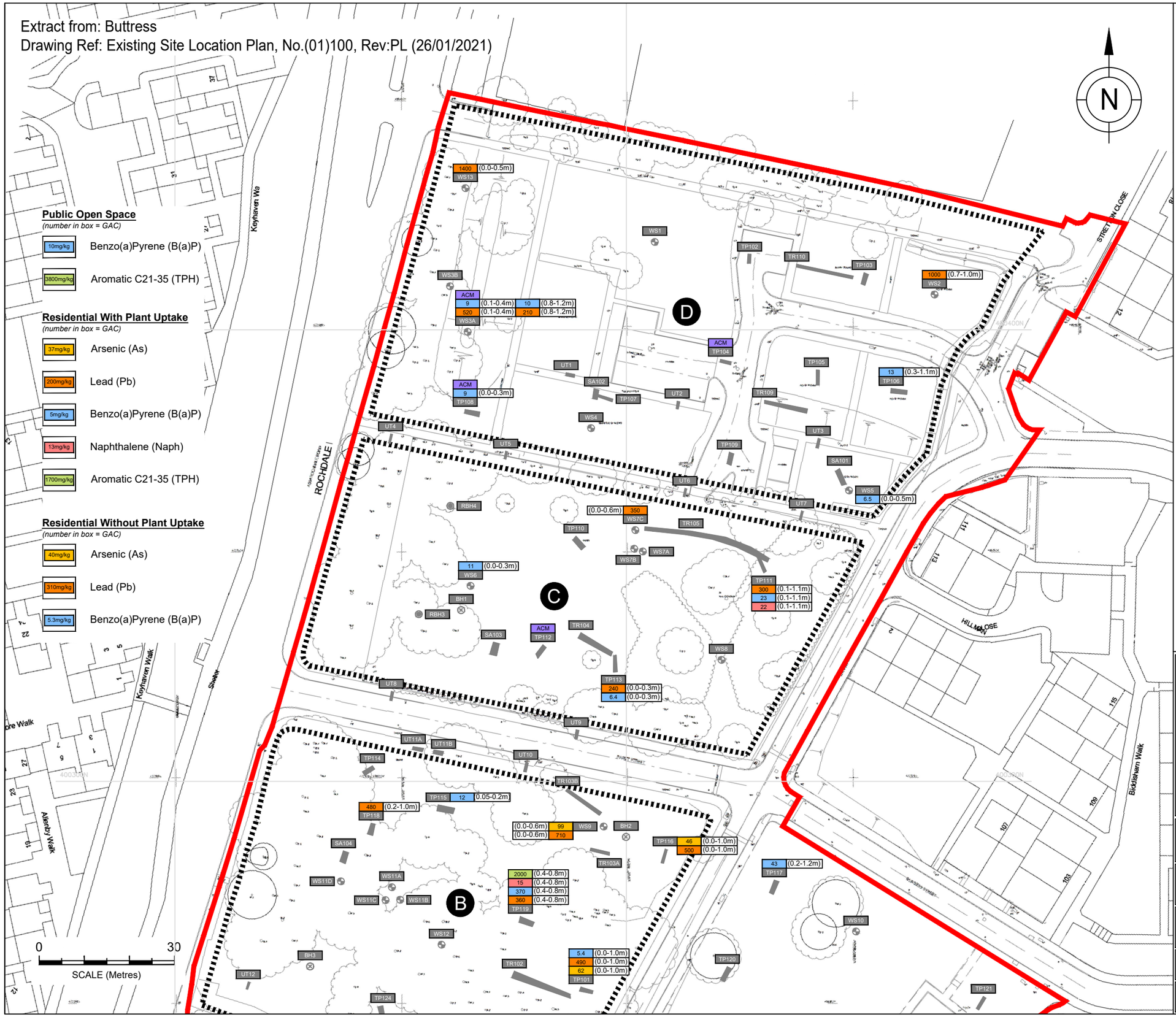

KEY

- Site Boundary
- Plots
- Cable Percussive Borehole (BH)
- Plot Identification
- Trial Pit with Soakaway Testing (SA)
- Trial Pit (TP)
- Trial Trench (TR)
- Utility Trench (UT)
- Window Sample Borehole (WS)
- Rotary Borehole (RBH)
- ACM — Asbestos-Containing Material (ACM)

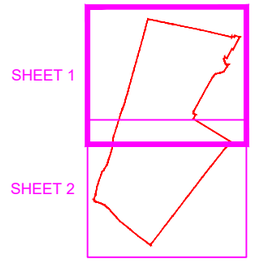

Sampling Locations and features annotated by LK Consult Ltd are approximate and are based upon observed measurements unless otherwise stated. Do not scale from this drawing and work from marked dimensions only. All dimensions and features should be confirmed on site by the Contractor. Where this drawing includes information provided to LK Consult Ltd by others, LK Consult Ltd gives no warranty, representation or assurance as to the accuracy of such information.

LK CONSULT LIMITED

Client: Civic Engineers

Site: Collyhurst Village, Manchester

Title: Elevated Contaminants Plan (Sheet 1)

Job No.:	Scale (See Scale Bar):	Figure:	Revision:
LKC 20 1120	See Scale Bar	5	

Drawn By:	Checked By:	Drawn:
AC	CH	Jan 2021

Remediation Zones

- Cover System Required (450mm Front Gardens, 600mm Rear Gardens (**With a Geotextile Membrane or a Break Layer**))
- Characteristic Situation 2 (CS2) Gas Protection Measures Required
- Site Investigation Required (Occupied)
- Cover System Required 450mm Shared Landscaping (**With a Geotextile Membrane or a Break Layer**))

NOTE:

Nominal 150mm topsoil cover required in any soft landscaping in areas not requiring cover system.

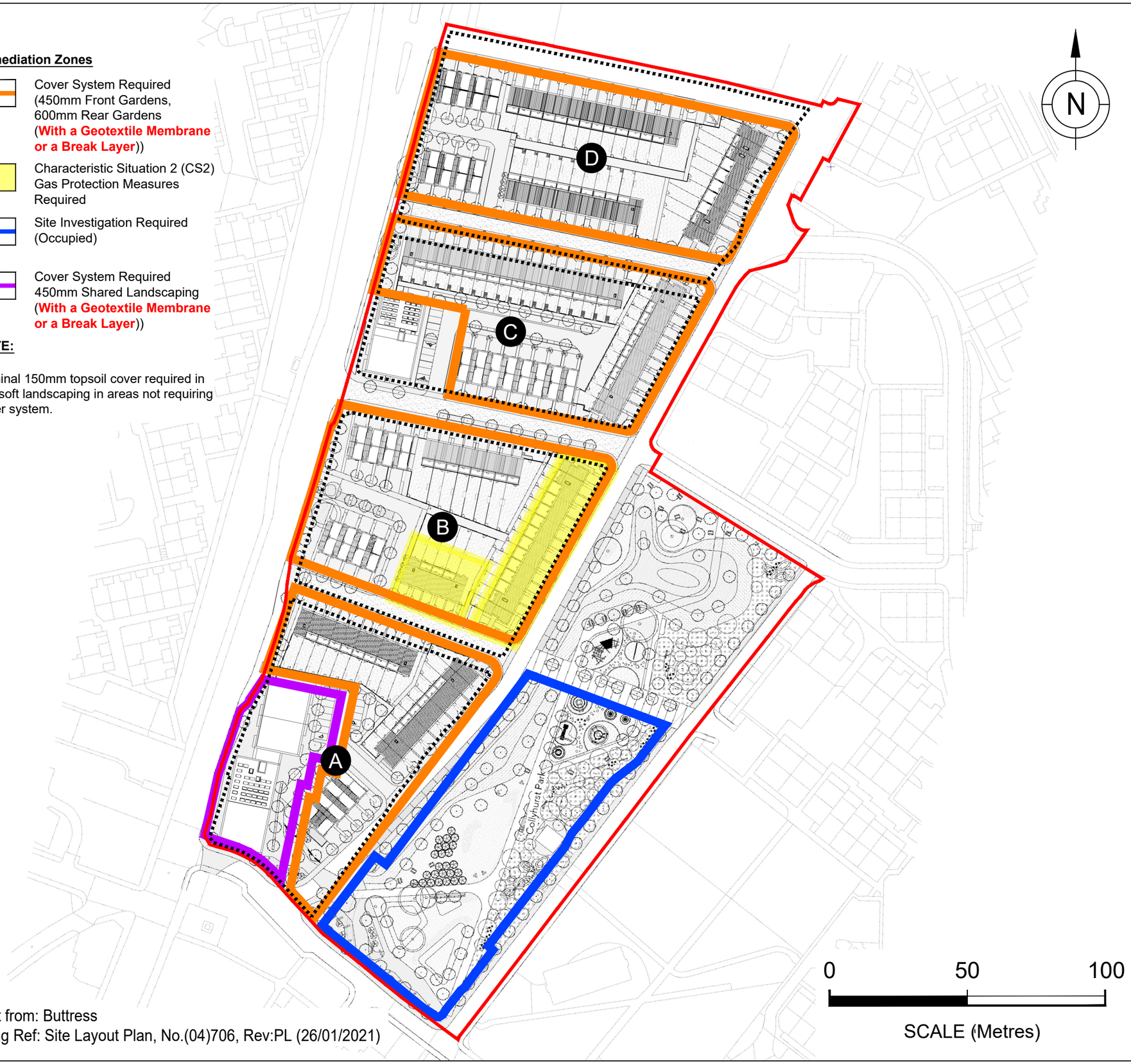

Extract from: Buttress
Drawing Ref: Site Layout Plan, No.(04)706, Rev:PL (26/01/2021)

KEY

- Site Boundary
- Plots
- Plot Identification

Sampling Locations and features annotated by LK Consult Ltd are approximate and are based upon observed measurements unless otherwise stated. Do not scale from this drawing and work from marked dimensions only. All dimensions and features should be confirmed on site by the Contractor. Where this drawing includes information provided to LK Consult Ltd by others, LK Consult Ltd gives no warranty, representation or assurance as to the accuracy of such information.

LK CONSULT LIMITED

Client:	Civic Engineers
Site:	Collyhurst Village, Manchester
Title:	Remediation Zoning Plan
Job No.:	LKC 20 1120
Scale (See Scale Bar):	See Scale Bar
Figure:	6
Revision:	
Drawn By:	AC
Checked By:	CH
Drawn:	Jan 2021

APPENDIX A

REMEDIATION VALIDATION CRITERIA (SOIL)