ASTRA GROUP

CLIENT
CAA ICON

JOB NUMBER
XJ85347

PROJECT
CO-OP LIVE
ROOFTOP ACTIVATION SIGN
PLANNING APPLICATION

DATE
17/03/23

PROJECT MANAGER
SW

DRAWN BY
ARP

REVISIONS

01 – 17/03/23 – INITIAL PLANNING APPLICATION VISUAL SENT

DIGITAL | SIGNS | GRAPHICS | SERVICE

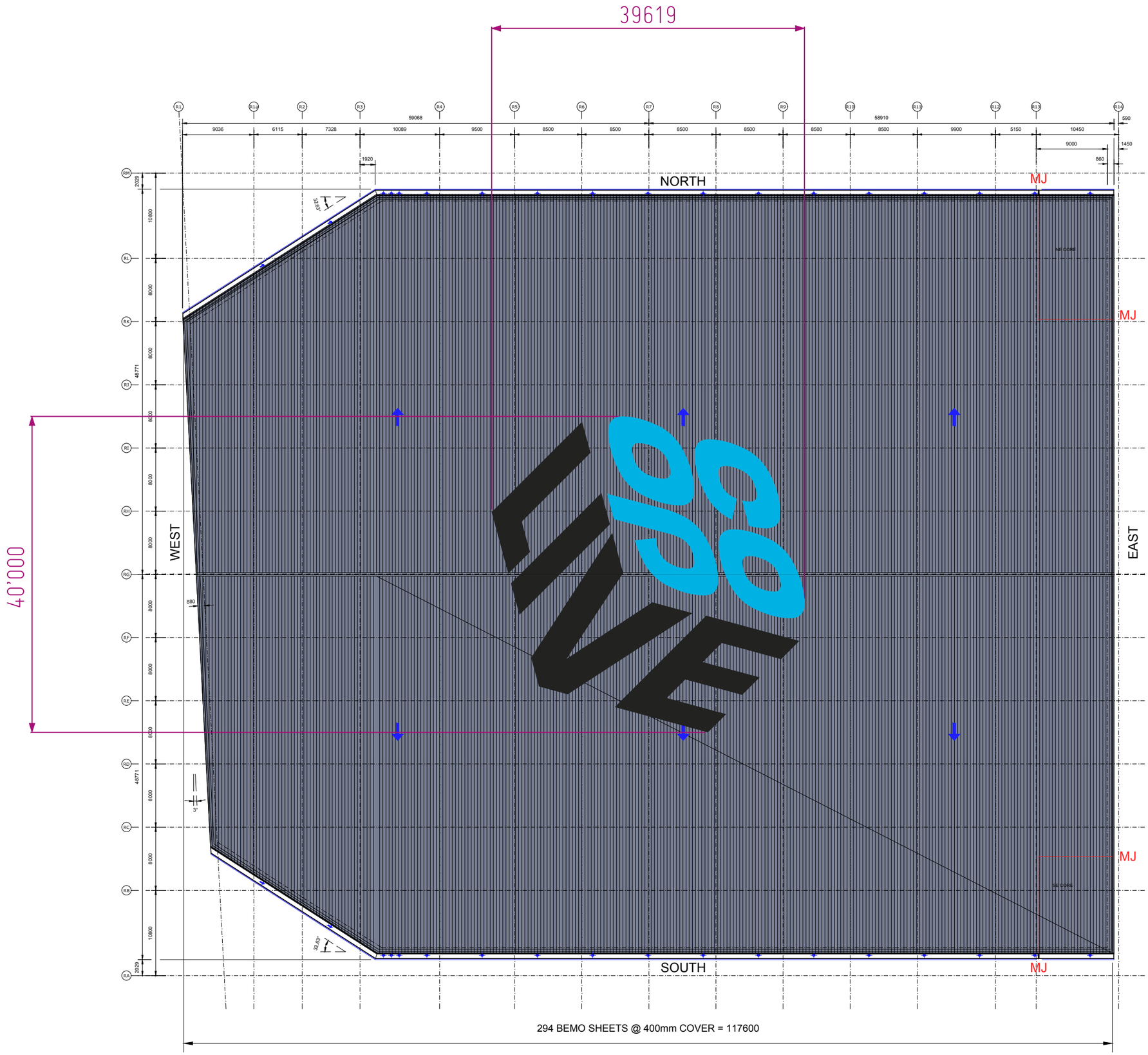

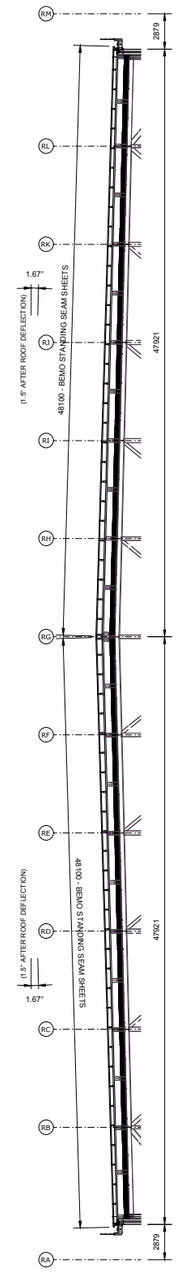

JOB NUMBER XJ85347 ACCOUNT MANAGER JLJ

SCALE 1:500@A3 DRAWN BY ARP

DRAFT
FOR APPROVAL ONLY
DO NOT MANUFACTURE
FROM THIS DRAWING

COLOUR SPECIFICATION

RAL 9005
60% GLOSS

PAINT TO MATCH
PANTONE 306C
60% GLOSS

CLIENT
CAA ICON

VISUAL
CO-OP LIVE ROOFTOP ACTIVATION

ASTRA GROUP

UNIT 1 FIRST AVENUE
EUROPA VILLAGE
MANCHESTER M17 1JZ

© ALL RIGHTS RESERVED, INCLUDING THE RIGHT TO REPRODUCE IN WHOLE OR IN PART WITHOUT THE CONSENT OF ASTRA SIGNS LTD. THIS PRINTOUT IS FOR VISUAL PURPOSES ONLY AND NOT TO BE USED AS AN EXACT COLOUR REFERENCE.

DO NOT SCALE FROM THIS DRAWING. ALL DIMENSIONS TO BE CHECKED PRIOR TO MANUFACTURE

JOB NUMBER XJ85347 ACCOUNT MANAGER JLJ

SCALE 1:500@A4 DRAWN BY ARP

DRAFT
FOR APPROVAL ONLY
DO NOT MANUFACTURE
FROM THIS DRAWING

SCALE 1-200

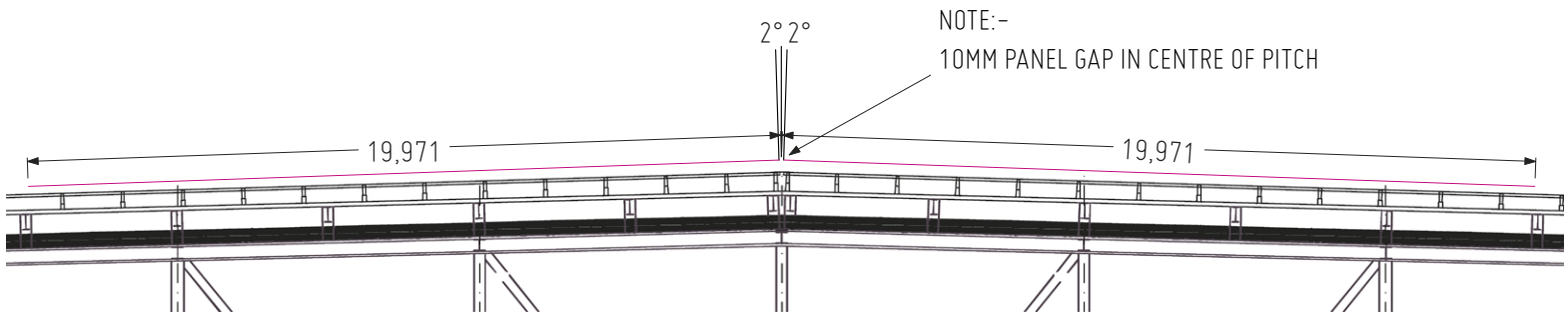

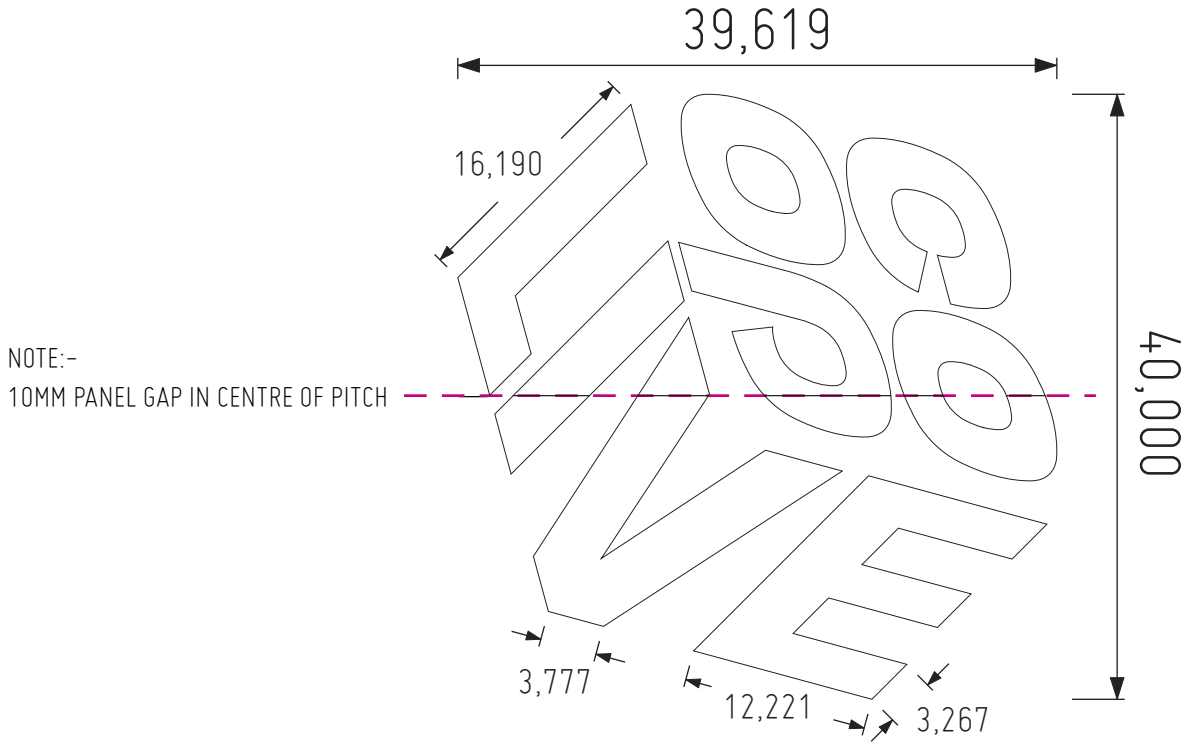

CLIENT
CAA ICON

VISUAL
CO-OP LIVE ROOFTOP ACTIVATION

ASTRA GROUP

UNIT 1 FIRST AVENUE
EUROPA VILLAGE
MANCHESTER M17 1JZ

CO-OP LIVE ROOFTOP ACTIVATION

DO NOT SCALE FROM THIS DRAWING. ALL DIMENSIONS TO BE CHECKED PRIOR TO MANUFACTURE

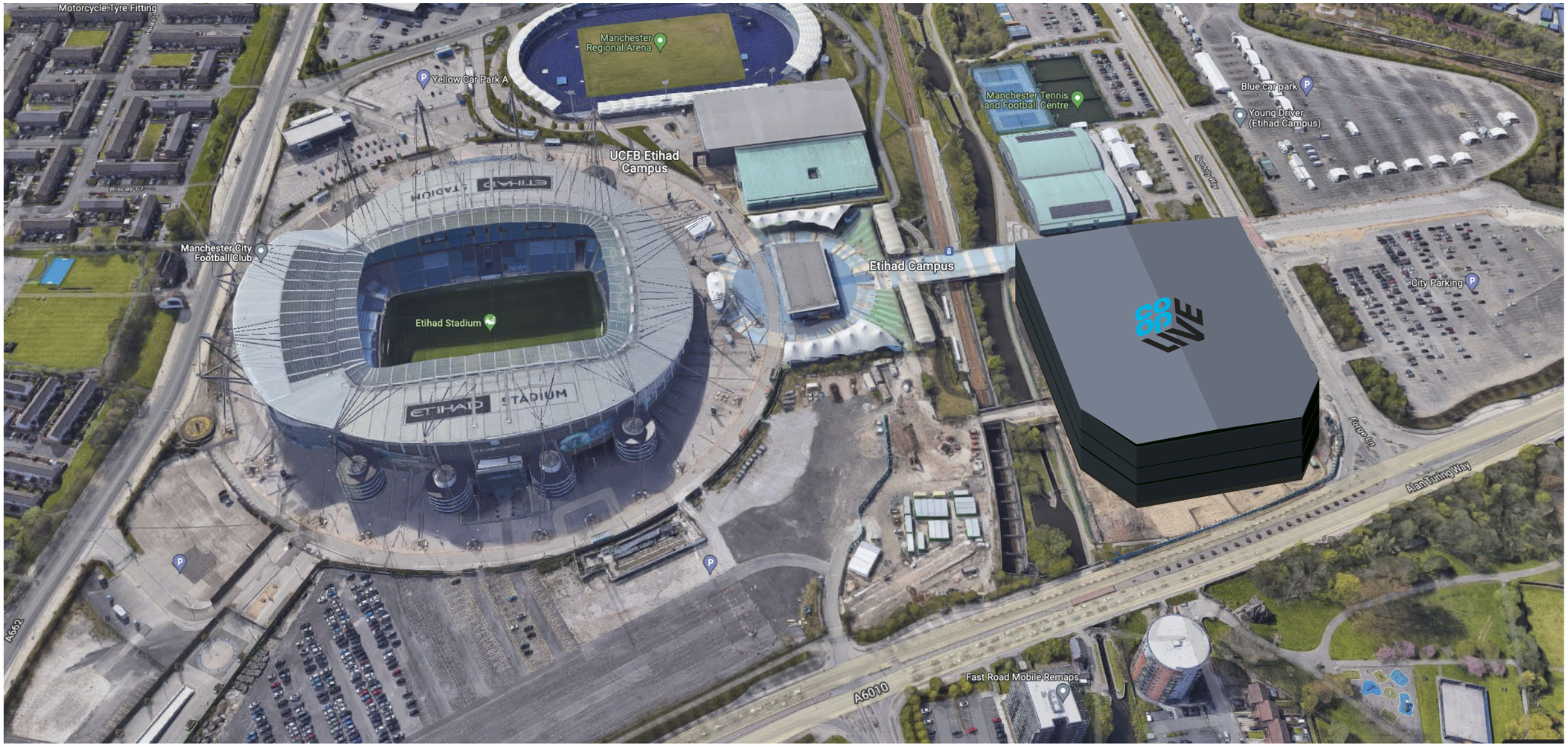

JOB NUMBER XJ85347 ACCOUNT MANAGER JLJ

SCALE 1:500@A3 DRAWN BY ARP

DRAFT

FOR APPROVAL ONLY
DO NOT MANUFACTURE
FROM THIS DRAWING

CLIENT

CAA ICON

VISUAL

CO-OP LIVE ROOFTOP ACTIVATION

UNIT 1 FIRST AVENUE
EUROPA VILLAGE
MANCHESTER M17 1JZ

© ALL RIGHTS RESERVED, INCLUDING THE RIGHT TO REPRODUCE IN WHOLE OR IN PART WITHOUT THE CONSENT OF ASTRA SIGNS LTD.
THIS PRINTOUT IS FOR VISUAL PURPOSES ONLY AND NOT TO BE USED AS AN EXACT COLOUR REFERENCE.

DO NOT SCALE FROM THIS DRAWING. ALL DIMENSIONS TO BE CHECKED PRIOR TO MANUFACTURE

1/1 SCALE OF HOLES
6MM DIA, 14MM PITCH

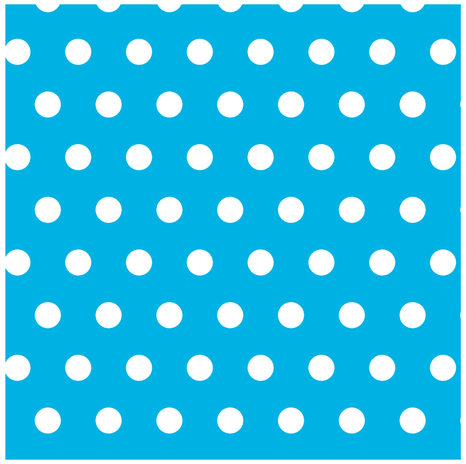

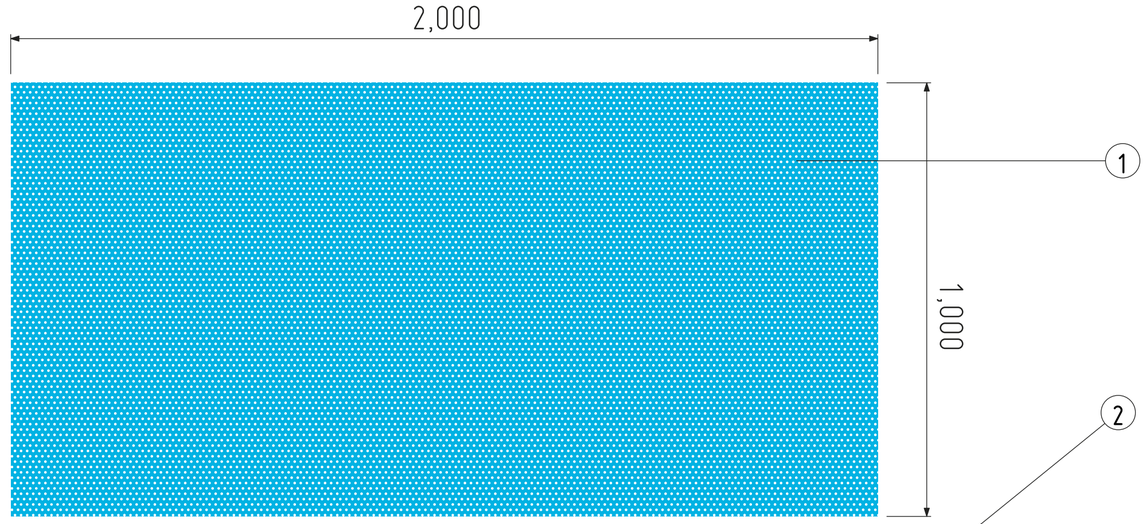

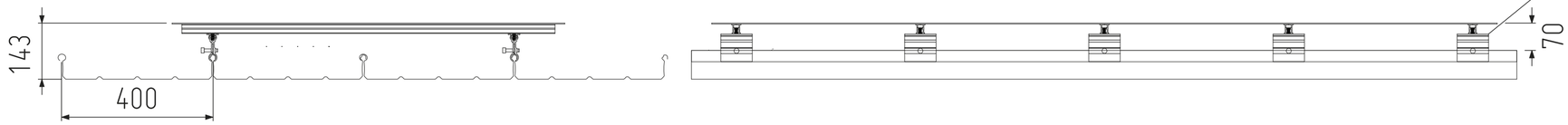

01	2.5MM PERFORATED ALUMINIUM COATED (COLOUR TBC)
02	SEAM CLAMP
03	MEDIUM SIGN CHANEL

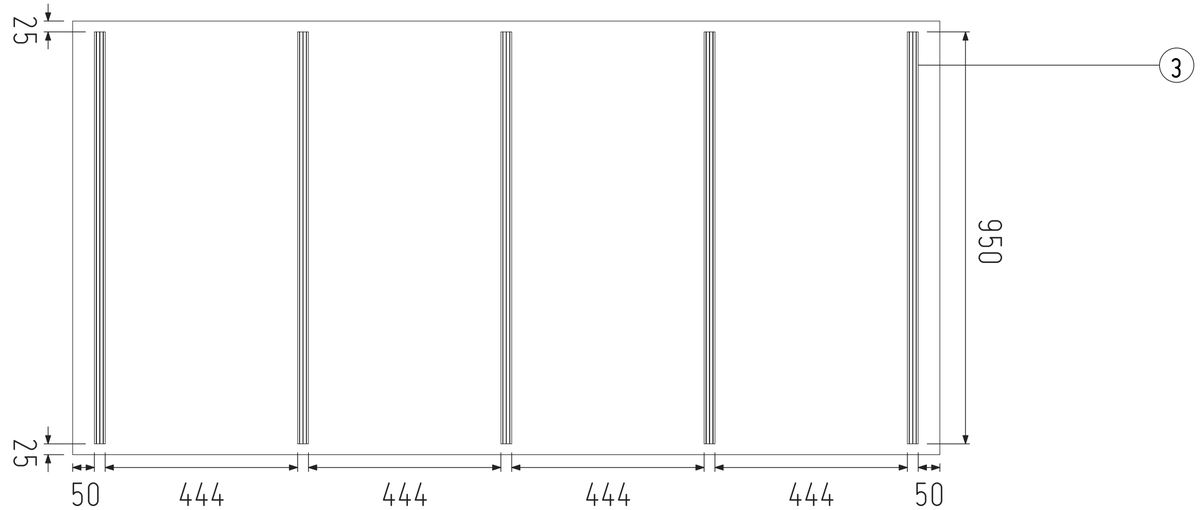

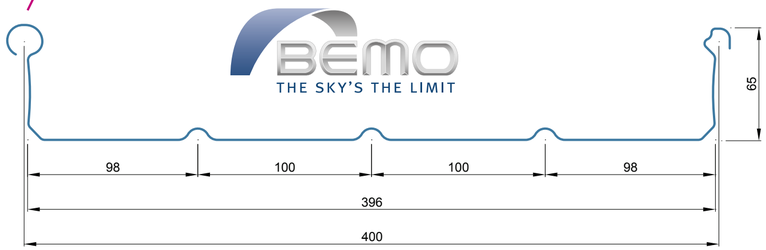

PRODUCT INFORMATION N65-400

N65 profile widths	250 MM, 305 MM, 333 MM, 400 MM, 500 MM UND 600 MM				
N65 VARIABLE **profiles**	100 MM — 1000 MM				
MATERIALS	ALUMINIUM	STEEL	STAINLESS STEEL	COPPER	TITANIUM ZINC
MATERIAL THICK - NESS IN MM	0.8 — 1.2	0.63 — 0.75	0.5 — 0.7	0.8 — 1.0	0.7 — 1.0
COATINGS	BEMO-FLON, PVDF, POLYESTER, REYNOLUX ® ECOCLEAN ™				
SURFACE	STUCCO, BRUSHED, ANODIZED, ALU-ZINC, PRE-WEATHERED, CLADDED				
HOLE PATTERNS	RV 3.00 — 5.00	RV 3.50 — 5.00	RV 5.00 — 8.00		
MATERIALS	ALUMINIUM				
MATERIAL THICKNESS	1.0 — 1.2 MM				
BEADING	RUNNING PARALLEL, STRAIGHT THROUGH THE CENTRE, OR WITHOUT BEADING				

PRODUCTION LENGTHS	FACTORY PRODUCTION UP TO 36 M, ON-SITE PRODUCTION > 100 M
SILENT AC FLEECE	Possible on undersides of all profiles
WATER TRAP	On all profiles
BEAD SEAMING SEALS	Possible on all N65 profiles
MINIMUM ROOF INCLINATION	ALUMINIUM, STAINLESS STEEL, COPPER 1.50° (2.60 %) SPLICE- AND PENETRATION WELDED 2.90° (5.00 %) SPLICE- AND PENETRATION SEALED STEEL, TITANIUM ZINC 3.0° (5.24 %) WITHOUT SPLICE- AND PENETRATION SEAL 5.0° (8.75 %) SPLICE- AND PENETRATION SEALED ALU-ZINC 1.50° (2.60 %) WITHOUT SPLICE- AND PENETRATION SEAL 2.90° (5.00 %) SPLICE- AND PENETRATION SEALED THERE IS NO REQUIREMENT FOR A MINIMUM INCLINATION (REGIONAL) for the ridge area when the standing seam profile is arranged NON-ABUTTING RUNNING OVER THE RIDGE.

JOB NUMBER XJ85347 ACCOUNT MANAGER JLJ

SCALE 1:500@A3 DRAWN BY ARP

DRAFT
FOR APPROVAL ONLY
DO NOT MANUFACTURE
FROM THIS DRAWING

COLOUR SPECIFICATION

RAL 9005
60% GLOSS

PAINT TO MATCH
PANTONE 306C
60% GLOSS

CLIENT
CAA ICON

VISUAL
CO-OP LIVE ROOFTOP ACTIVATION

ASTRA GROUP

UNIT 1 FIRST AVENUE
EUROPA VILLAGE
MANCHESTER M17 1JZ

© ALL RIGHTS RESERVED, INCLUDING THE RIGHT TO REPRODUCE IN WHOLE OR IN PART WITHOUT THE CONSENT OF ASTRA SIGNS LTD. THIS PRINTOUT IS FOR VISUAL PURPOSES ONLY AND NOT TO BE USED AS AN EXACT COLOUR REFERENCE.

DO NOT SCALE FROM THIS DRAWING. ALL DIMENSIONS TO BE CHECKED PRIOR TO MANUFACTURE

ASTRA GROUP

CO-OP LIVE – ROOFTOP ACTIVATION SIGN – PLANNING APPLICATION