PRODUCT SPECIFICATION

AMENITY PLUS - CIRCULAR

Dextra GROUP PLC

MADE IN BRITAIN®

INTRODUCTION

The Amenity Plus Circular is available in lumen outputs ranging from 1500 to 3000 and is manufactured with an injection moulded polycarbonate housing and diffuser and can be offered with a range of dimming types, integral lithium emergency and black or white housings.

The Amenity Plus range includes premium mid power LEDs offering excellent efficiency and longevity with a lifetime of L90 at 60,000 operating hours. Energy savings can be further enhanced with a selection of integral presence detection and bright out microwave sensors including on / off, bi level dimming and wireless variants allowing luminaires to be grouped for simultaneous operation.

The Amenity Plus range is sealed to IP65 allowing for use in external areas such as under canopies or wall mounting, however is equally suited to a range of internal applications such as corridors, stairways, toilets and storage areas.

- CE
- IP65
- IK10
- L90 / 60K OPERATING HOURS
- 3 STEP MACADAM ELLIPSE

APPLICATION

- Canteen

- Commercial / Offices
- Corridor
- Education
- Exterior
- Healthcare / Social Housing
- Hotel / Leisure
- Industrial / Manufacturing
- Parking / Exterior
- Retail
- Stairwell
- Store Room
- Toilet
- Transport
- Warehouse / Storage

SPECIFICATION

CONSTRUCTION

- Housing: Injection moulded polycarbonate
- Finish: Matt black
- Finish: Matt white
- Diffuser: Injection moulded high transmission opal polycarbonate
- IK10
- IP65

PERFORMANCE

- Part L2 compliant
- 3SCDM Three step Macadams ellipse
- TM21: L90 at 60,000 operating hours
- Up to 131 luminaire lumens per circuit Watt.

ENVIRONMENTAL

- Designed to allow simple replacement of components with commonly available tools in compliance with the Eco Design Directive.
- All critical components are mounted on a single tray for simple end of life repair or upgrade.
- Powered by European branded drivers and emergency modules ensuring replacement parts are easily sourced.
- Every luminaire is labelled with a unique ID number allowing easy identification of spare parts for the lifetime of the product.
- Contains no single use plastics or polystyrene packaging.
- Supplied in plain card boxes with paper tape ensuring packaging is easily recycled.

- Designed to allow simple disassembly for end of life recycling.
- UK based manufacturing providing local support throughout the product lifetime and minimising transportation miles.

EMERGENCY

- Available with optional standard, self test and autotest integral emergency with lithium batteries for extended warranty and lifetime.
- Optional Reacta-Link wireless emergency for automated centralised reporting.
- Optional Reacta-Control wireless emergency for automated centralised reporting.

CONTROL

- Optional compatibility with a range of dimming systems including DALI, DSI and Switch Dimming
- Optional Integral R25 microwave presence and bright out sensor
- Optional Integral R25W wireless microwave presence and bright out sensor
- Optional integral Reacta-Link for integration with Reacta-Link wireless installations
- Optional integral Reacta-Control for integration with Reacta-Control wireless installations
- Optional integral photocell

INSTALLATION

- Suitable for conduit installation
- Suitable for surface installation
- Retrofit in existing luminaires

VARIATIONS

- Available with a wide range of colour temperatures and renderings
- Available in a range of lumen outputs
- Available in white or black finishes
- Available with optional night light

IMAGES

PRODUCT IMAGES

Amenity Plus Circular Black

Amenity Plus Circular White

PROJECT IMAGES

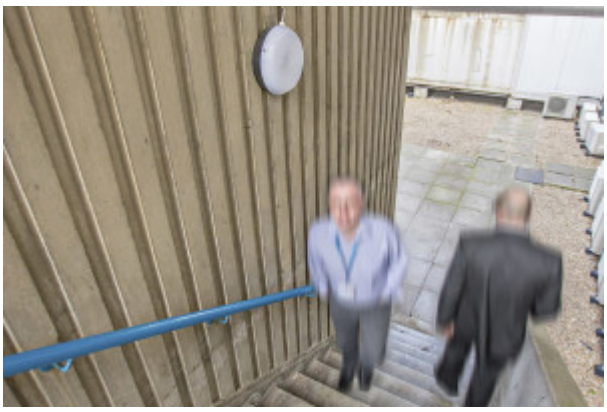

TECHNICAL

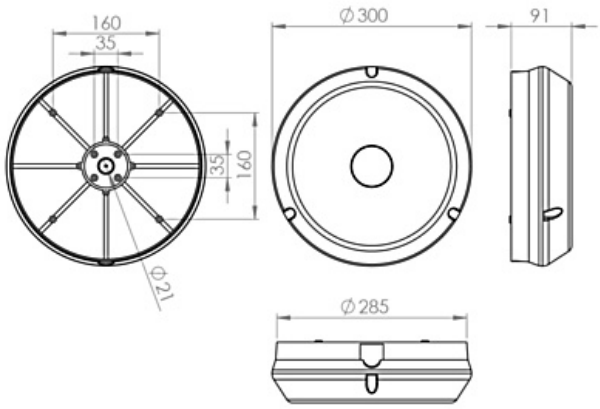

Amenity Plus Circular Medium

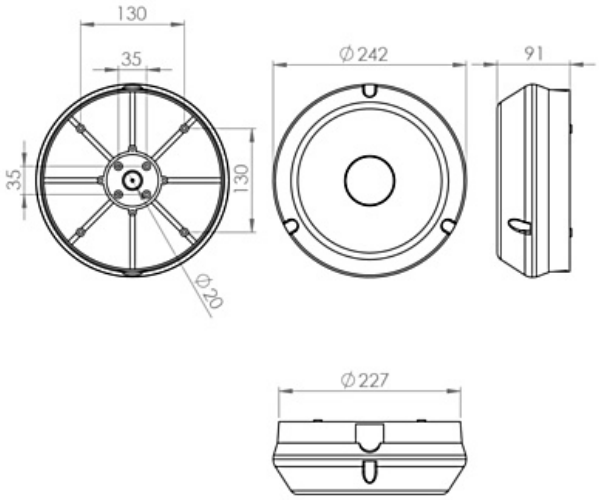

Amenity Plus Circular Small

WARRANTY

At Dextra our commitment to service has been at the forefront throughout our history spanning more than forty years in the UK lighting market. Our service ethos extends beyond design and delivery, we believe supporting your installation throughout the warranty period is equally crucial, whilst the strength and longevity of Dextra Group provides peace of mind that our warranty will be supported throughout.

The Dextra range is supplied with a five year warranty commencing from the date of delivery. During the first three years defects will be repaired on site and the warranty will include both parts and labour. For the final two years drivers, emergency modules, wireless modules, sensors and LED circuits will be supplied free of charge to replace defective components, labour and other associated costs are not included.

Certain ranges and components are subject to exemptions:

- Lithium batteries are provided with a three year warranty for parts and labour. Nickel Metal Hydride and Nickel Cadmium batteries are provided with a one year warranty for parts and labour.
- Emergency luminaires including AME LED, EXI LED, EXI2 LED, EXI Track, HBE LED, HBE2 LED, OAT2 LED, OEZ LED and Twinspot with Nickel Metal Hydride batteries are supplied with a one year warranty for parts and labour. Lithium variants of these ranges are supplied with a three year warranty for parts and labour with the exception of the AME2, EXI3, HBE3 and TWS IP65 L7 ranges which are supplied with a one year parts and labour warranty. TWS IP65 L7 in autotest and wireless variants are supplied with the standard three year lithium battery warranty.
- Protec Micro, PTECF7 Fire Rated Downlights, Serenus and the Opus Sconce are provided with a five year replacement luminaire only warranty. Protec FR Fire Rated Downlights are provided with a 2 year replacement luminaire only warranty.
- Controls systems such as standalone sensors, switches, marshalling boxes and cabling are provided with a one year warranty for both parts and labour. DALI control systems are provided with a two year warranty for both parts and labour.
- LEDextra ranges are supplied with a three year parts or replacement luminaire only warranty with the exception of the IMPR RGBW, the Runway RBGW and the MOD RGBW. These three ranges are supplied with our standard five year warranty during which defects within the first three years will be repaired on site and the warranty includes both parts and labour. For the final two years free of charge replacement components only will be supplied to rectify any failures but labour and other associated costs are not included.
- LEDEX ranges are supplied with a three year replacement luminaire only warranty.

All warranties are subject to correct use of the product and will be invalidated by misuse, for example incorrect installation, unsuitable environmental conditions or incorrect maintenance. It is the duty of the customer to ensure that all the fault lies with the luminaire prior to requesting replacement parts or site repairs. In the event that no defect is found with the product our costs for attending site will be recharged to the customer and credit will not be issued against returned products. No consequential losses incurred resulting from any defect with our product will be reimbursed.

Given the nature of LED technology a small percentage of LEDs may fail during the lifetime of a luminaire, this does not cause a reduction in lumen output. As such LED luminaires are only deemed to be faulty for warranty purposes when in excess of ten percent of LEDs have failed in a single luminaire

On site repair of products under warranty will be undertaken during normal working hours, 9am to 5pm Monday to Friday, and will require unrestricted access to luminaires. Where required Dextra will provide access equipment to carry out repairs at height, should luminaires have been installed in locations where reasonable provision for maintenance access has not been made we reserve the right to supply replacement product only.

If you require any assistance with regards to our products please contact our Customer Services department on 01747

858100.

DOWNLOAD WARRANTY PDF

ORDER CODES

LUMINAIRE

Code	Description	Power	Llm/W
Small			
AMC L10 WO	Amenity Plus, 457llm, Small Circular, White Opal, Colour 84	10.2W	44
Medium			
AMC L15 BO	Amenity Plus, 1,252llm, Medium Circular, Black Opal, Colour 84	9.5W	131
AMC L15 WO	Amenity Plus, 1,252llm, Medium Circular, White Opal, Colour 84	9.5W	131
AMC L20 BO	Amenity Plus, 1,660llm, Medium Circular, Black Opal, Colour 84	14.4W	115
AMC L20 WO	Amenity Plus, 1,660llm, Medium Circular, White Opal, Colour 84	14.4W	115
AMC L30 BO	Amenity Plus, 2,487llm, Medium Circular, Black Opal, Colour 84	20.0W	124
AMC L30 WO	Amenity Plus, 2,487llm, Medium Circular, White Opal, Colour 84	20.0W	124

DIMMING

Code	Description
A	DALI Digital Addressable Lighting Interface
S	Switch Dimming
D	DSI Digital Dimming
C	Bi-Level Dimming For Standalone Switched Sensor

L10 variants cannot include both dimming and emergency.

CONTROL

Code	Description
R25E	Reacta 25, Presence & Bright Out, On / Off, 2.5-4M
R25C*	Reacta 25, Presence & Bright Out, Bi-Level Dimming, 2.5-4M
R25W	Reacta 25, Wireless, Presence & Bright Out, Dimmable, 2.5-4M
R25WE	Reacta 25, Wireless, Presence & Bright Out, On / Off, 2.5-4M
PH	Photocell
RLM	Reacta-Link, Wireless, Presence, 2.5-4M
RC	Reacta-Control, Wireless Enabled Luminaire
RCMC*	Reacta-Control, Presence & Bright Out, Bi-level Dimming, 2.5-4M
RCME	Reacta-Control, Presence & Bright Out, On / Off, 2.5-4M

Please click here for full details on our wireless controls.

*Bi-Level Dimming will only dim the luminaire to 10% during absence and brightout, it will not turn the luminaire off.

R25E & R25C not available on L10 versions.

EMERGENCY

Code	Description
LE3	Lithium Standard Emergency 3 Hour
LS3	Lithium Selftest Emergency 3 Hour
LA3	Lithium Autotest Emergency 3 Hour
LSTR	Lithium Reacta-Link Emergency 3 Hour
LA3RC	Lithium Reacta-Control Emergency 3 Hour

MISCELLANEOUS

Code	Description
C**	Select Colour Temperature and Rendering; C83, C84, C85, C865, C93, C94
NL	Night Light (Non Emergency Variants Only)
TRS	Tamper Resistant Screws
TRS INSTALL KIT	Tamper Resistant Compatible Screwdriver Heads
LSF	Low Smoke Zero Halogen