Noise impact assessment

YA316.P1

Change of use from E(a) to E(b)

4 Cross Keys Street

Manchester

M4 5ET

Manchester, UK

Version 4.0

October 26, 2021

YAcoustics

ACOUSTICS & VIBRATION CONSULTANTS

Identification

Title: Noise impact assessment: Change of use from E(a) to E(b)
YA316.P1
Client: Christopher Ford Mackenzie
Date: October 26, 2021
Local: Manchester, UK
Version: 4.0
Prepared by: Luis Pereira
Prepared for: Christopher Ford Mackenzie

Revisions

Date	Changes / Comments	Reviser
25/10/2021	Report updated in line with the comments issued by Sue Jones from the Manchester City Council (MCC) Environmental Team on the 22nd of October 2021, and the proposed changes to the extract and air input fans	LP
21/09/2021	Development address changed from 6 Cross Keys Street to 4 Cross Keys Street	LP
20/09/2021	Report updated in line with the comments issued by the MCC Environmental Team	LP

DISCLAIMER
This report has been prepared by Yacoustics Ltd, with all reasonable skill, care and diligence within the terms of the Contract with the client, incorporation of our General Terms and Condition of Business and taking account of the resources devoted to us by agreement with the client. We disclaim any responsibility to the client and others in respect of any matters outside the scope of the above. This report is confidential to the client and we accept no responsibility of whatsoever nature to third parties to whom this report, or any part thereof, is made known. Any such party relies on the report at its own risk.

Contents

Contents 3

Acronyms 5

Glossary 6

Summary 7

1 INTRODUCTION 9

2 PROPOSAL 10
2.1 Noise sources and sensitive receivers 12

3 PLANNING POLICY AND RELEVANT CRITERIA 13

4 SITE SURVEY 15
4.1 Methodology 15
4.2 Results 16
4.3 Adjustments due to the impact of COVID-19 17

5 ENVIRONMENTAL NOISE BREAK-OUT 18
5.1 Methodology 18
5.2 Results 20

6 NOISE TRANSFER 25
6.1 Methodology 25
6.2 Adjacent apartment units 26
6.3 Adjacent offices 27

7 NOISE FROM FIXED PLANT 29
7.1 Methodology 29
7.2 Results 30
7.3 Noise mitigation measures 30

8 EXTERNAL SEATING AREA 36

8.1 Methodology 36
8.2 Results 37

Final considerations 38

BIBLIOGRAPHY 39

ANNEX A – NATIONAL PLANNING POLICY 41
A.1 National Planning Policy Framework (NPPF) 41
A.2 Noise Policy Statement for England (NPSE) 42

ANNEX B – KINGSPAN KS 1000 RW 44

ANNEX C – ENVIRONMENTAL NOISE BREAK-OUT (CALCULATION DETAILS) 51

ANNEX D – NOISE TRANSFER (CALCULATION DETAILS) . . . 62

ANNEX E – EXTRACTION AND AIR INPUT FANS (DETAILS) . 65

ANNEX F – ATTENUATOR (EXAMPLE) 77

Acronyms

IANLs internal ambient noise levels. 7, 26, 27

LOAEL Lowest Observed Adverse Effect Level. 7, 13

MCC Manchester City Council. 2, 7, 13, 20, 36, 38

NOEL No Observed Effect Level. 13

NPPF National Planning Policy Framework. 7, 13, 38

NPSE Noise Policy Statement for England. 7, 13, 38

NSR noise sensitive receiver(s). 12, 19, 20, 21, 22, 23, 24, 29, 30, 31, 32, 33, 34, 35, 36, 37

SLM sound level meter. 15

SPL sound pressure level. 36, 37

SWL sound power level. 18

Glossary

L_{A90} A-weighted background sound level - A-weighted sound pressure level obtained using time-weighting "F", that is exceeded for 90% of the time interval considered. 16, 17, 23, 24, 35

L_{Aeq} equivalent A-weighted sound pressure level - value of the A-weighted sound pressure level in decibels (dB) of a steady sound that has the same mean-squared sound pressure as the sound under consideration that varies with time. 15, 17, 21, 22, 23, 24, 26, 27, 30, 31, 32, 33, 34, 35

$L_{Ar,Tr}$ rating level - specific sound level plus any adjustment for the characteristic features of the sound, for a specified interval over which the specific sound level is determined. 23, 24, 35

L_{eq} equivalent sound pressure level - value of the sound pressure level in decibels (dB) of a steady sound that has the same mean-squared sound pressure as the sound under consideration that varies with time. 19

$L_{eq,T}$ equivalent continuous sound pressure level - value of the sound pressure level in decibels (dB) of a continuous, steady sound that, within a specified time interval, T, has the same mean-squared sound pressure as the sound under consideration that varies with time. 30, 31, 32, 33, 34

R sound reduction index - laboratory measure of the sound insulating properties of a material or building element in a stated frequency band. 19

R_w weighted sound reduction index - single-number quantity which characterizes the airborne sound insulating properties of a material or building element over a range of frequencies. 26, 27

© *copyright* 2021 Yacoustics – All rights reserved

Summary

This report has been prepared to support a planning application for a change of use from A1 to A3 (cafe/restaurant) at 4 Cross Keys Street, Manchester, M4 5ET.

For such a development, the MCC Planning & Noise Technical Guidance document [6] sets limits for noise break-out, noise transfer and fixed plant noise emissions at sensitive receivers.

A site survey has been carried out to determine the typical background noise levels at sensitive receivers, and calculations to assess impacts have been accomplished.

It has been determined that:

- with standard double glazing units (e.g. 4/16/4 mm) and the proposed *Kingspan KS1000 RW* roof system, the development break-out noise levels are in line with the limits set out by the MCC;
- the maximum allowable internal ambient noise levels (IANLs) within the proposed development is 80 dB(A);
- to minimize noise transfer between the proposed restaurant and the adjacent apartment and office units, the wall build-ups presented as Figure 1 are required;
- to mitigate plant noise, acoustic in-duct attenuators with the insertion loss as indicated in Table 1 are required for both the extract fan outlet and air-input fan inlet ducts;
- window units 2 and 3 (as identified in Section 5.1) can only be left open during the day-time period;
- noise emissions from the proposed external seating area are expected to be similar or lower than the recorded background noise levels and as such no impacts are expected.

Considering the context of the existing acoustic environment, the assessment result indicates a low impact based on implementing the recommended solutions.

The impact is considered to be a Lowest Observed Adverse Effect Level (LOAEL) in alignment with the National Planning Policy Framework (NPPF) and Noise Policy Statement for England (NPSE) aims.

© *copyright* 2021 Yacoustics – All rights reserved

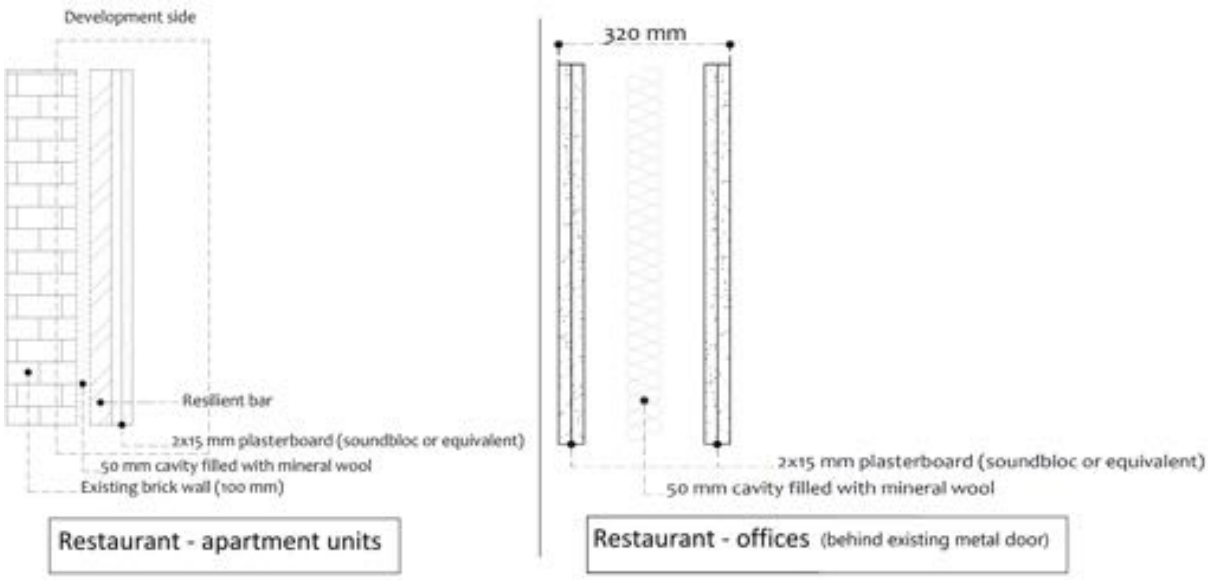

Figure 1 – Proposed wall treatments

Table 1 – Duct attenuators - insertion loss requirements

Unit	Octave band insertion loss (IL)						
	63	125	250	500	1 k	2 k	4 k
Air input fan **(Intake side)**	3	8	14	29	33	39	33
Extract fan **(Outlet side)**	9	13	22	32	36	35	31

© *copyright* 2021 Yacoustics – All rights reserved

1 Introduction

YAcoustics Ltd has been commissioned by Christopher Ford Mackenzie to provide independent specialist advice services in respect of a change of use from E(a) to E(b) at 4 Cross Keys Street, Manchester, M4 5ET.

The relevant acoustic requirements have been identified and suitable design solutions and recommendations have been provided accordingly. A site location reference is presented as Figure 2.

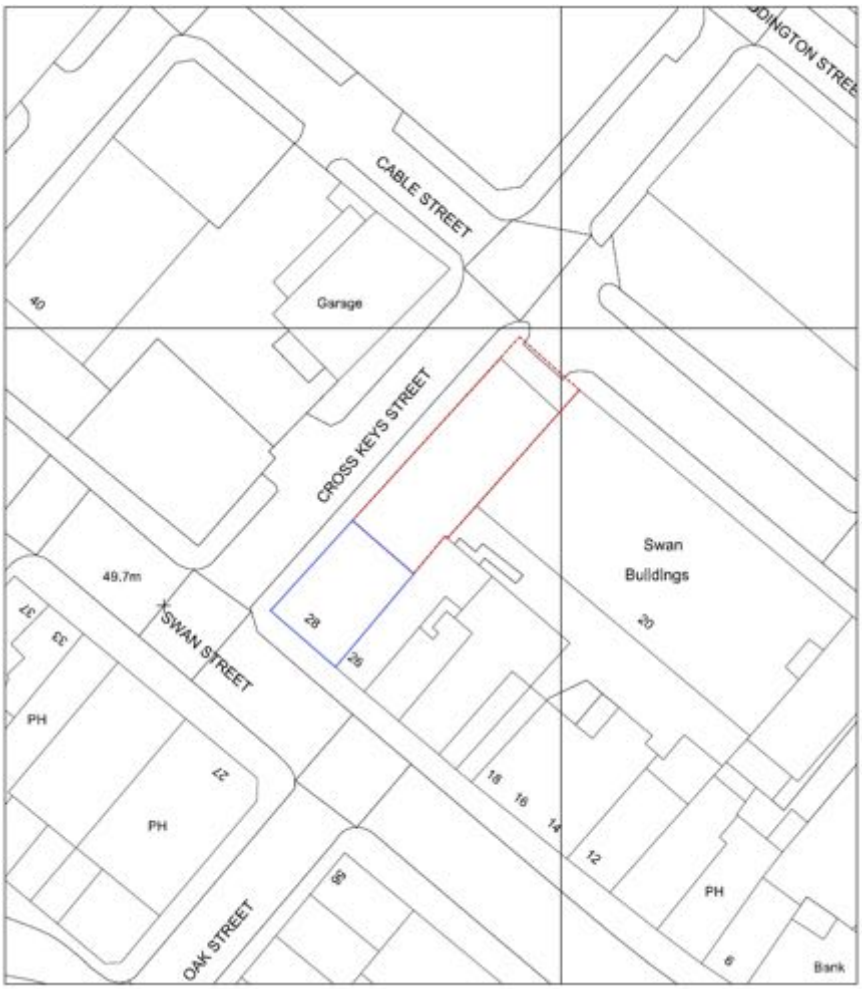

Figure 2 – Development location (red line)

© copyright 2021 Yacoustics – All rights reserved

2 Proposal

The proposed development is intended to operate on a daily basis as follows:

Sunday to Thursday - From 08:00 to 24:00 hrs; and

Friday to Saturday - From 08:00 to 00:30 hrs.

Figure 3 shows the proposed architectural layout.

According to the information provided by the client, it is understood that extraction and air input fans are required for the kitchen area. Details of its proposed inlet and outlet points are indicated in Figure 4.

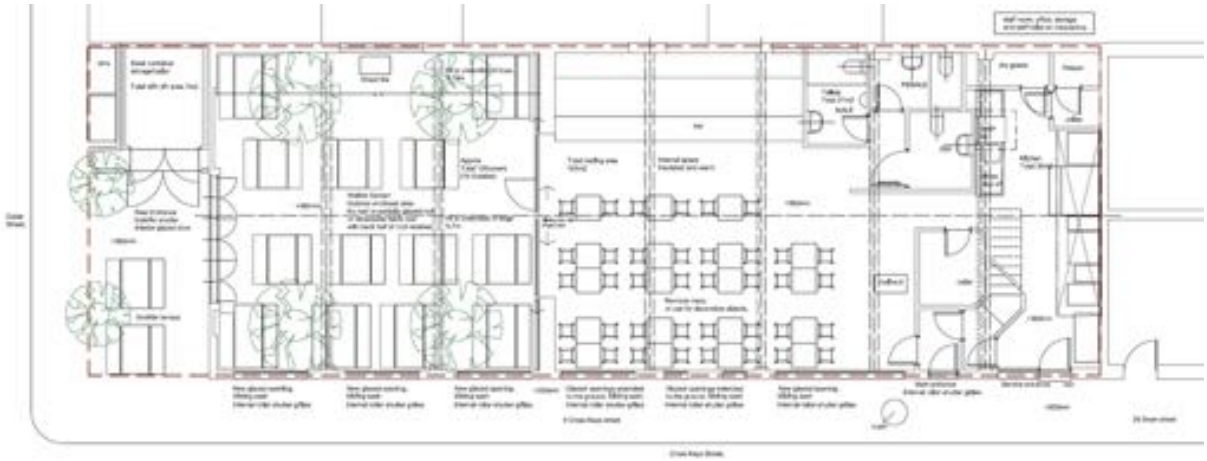

Figure 3 – Proposed architectural layout

© copyright 2021 Yacoustics – All rights reserved

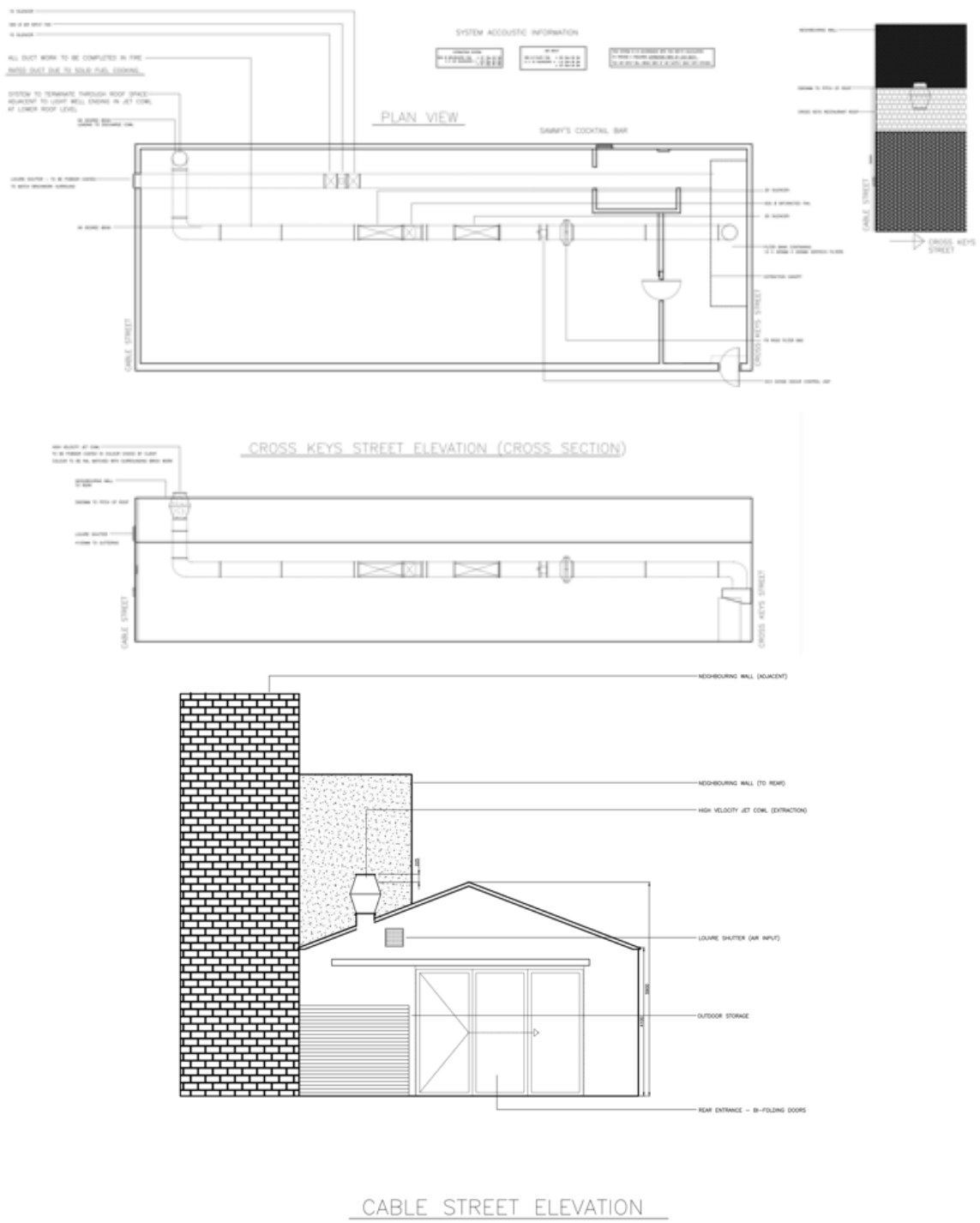

Figure 4 – Proposed kitchen extraction strategy

© copyright 2021 Yacoustics – All rights reserved

2.1 Noise sources and sensitive receivers

The sensitive receivers likely to be the most affected by the proposed development operation are presented as Figure 5.

NSR A refers to the offices which form part of the Swan Buildings on Swan Street, NSR B refers to the apartment block on Cable Street, and NSR C refers to the apartment block on Swan Street. NSR D concerns the new proposed residential apartments block on the opposite side of Cross Keys Street[1].

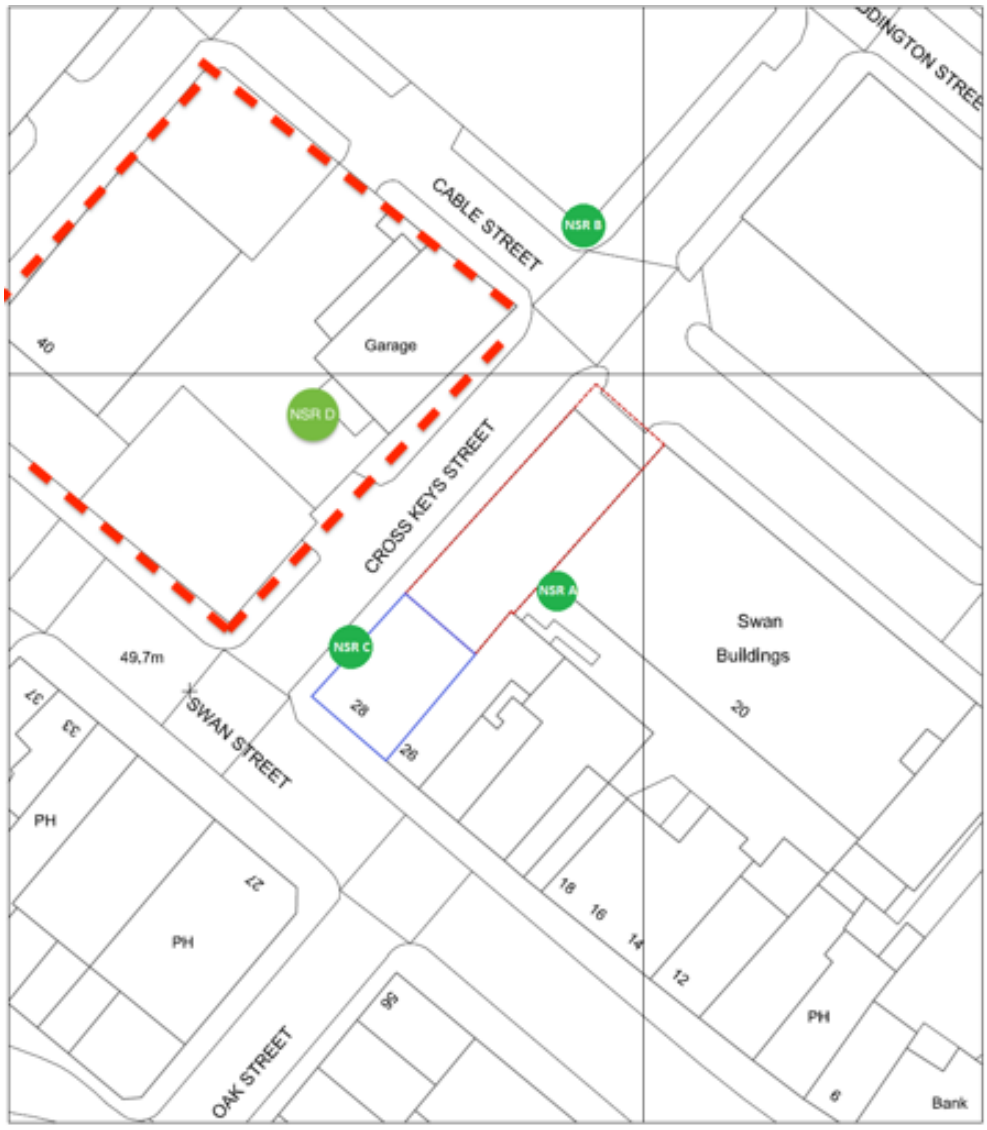

Figure 5 – Noise sensitive receivers

[1] See planning application 128997/FO/2020.

© copyright 2021 Yacoustics – All rights reserved

3 Planning policy and relevant criteria

The MCC Planning & Noise Technical Guidance document [6] sets out criteria and guidelines for noise management concerning new development.

The document provides noise level limits which are understood to be between the No Observed Effect Level (NOEL) (this is the level of noise exposure below which no effect at all on health or quality of life can be detected) and the LOAEL (this is the level of noise exposure above which adverse effects on health and quality of life can be detected) and is therefore in line with the principles of the NPPF [8] and NPSE (see Annex A).

The Sections and criteria included in the Planning & Noise Technical Guidance document, which are relevant for the proposed development, are presented below.

Section 3.6.1.3 Mixed Use Developments:

"Where a planning application includes a proposal to contain a potentially noisy development within the same building as a noise sensitive use or visa versa the noise survey should consider the transfer of noise between the noisy and noise sensitive uses... Consultants should demonstrate that the structure of the development will be sufficient to adequately contain the noise generated within the development..."

Section 3.6.1.5 Industrial/Commercial Developments:

"BS 4142 should be used to assess the likely impact of noise from industrial and commercial sources at noise sensitive premises (section 3.5). One of the indications of the impact of a BS 4142 assessment is the lower the rating level is relative to the measured background sound level, the less likely it is that the specific sound source will have an adverse impact or a significant adverse impact. Where the rating level does not exceed the background sound level, this is an indication of the specific sound source having a low impact, depending on the context

The Council consider that new developments should contribute and enhance the area in which they are located and where possible, contribute to the improvement of people's health and quality of life as per the NPSE [4]. With this in mind, the design objective should be:

The development should be designed so as to achieve a rating level of 5dB (LAeq) below the typical background (LA90) level at the nearest noise sensitive

© copyright 2021 Yacoustics – All rights reserved

location."

Section 3.6.1.5.1 Noise and vibration from fixed plant/equipment

Noise from fixed plant, equipment or machinery can be very annoying and disruptive to people living nearby particularly where that item involved emits a noise with impulsive or tonal characteristics.

Many of the noise complaints Environmental Health receive about noise from plant, equipment and machinery specifically concern the character of the noise emitted. Any noise assessment needs to consider not only the overall level of noise emitted but also its particular characteristics. The noise assessment should be based on BS 4142: 2014 and any application for fixed plant, equipment or machinery must demonstrate that:

Externally mounted ancillary plant, equipment and servicing shall be selected and/or acoustically treated in accordance with a scheme designed so as to achieve a rating level of 5dB (LAeq) below the typical background (LA90) level at the nearest noise sensitive location."

© copyright 2021 Yacoustics – All rights reserved

4 Site survey

4.1 Methodology

The environmental noise survey was carried out on the 21st of April 2021 in line with BS 7445-2 [1].

It is understood that the proposed change of use may affect the offices which form part of the Swan Buildings on Swan Street and the existing apartment block on Cable Street and as such the microphone was positioned as indicated in Figure 6.

It is considered that background noise levels at the position adopted are similar or lower than those near the Swan Buildings offices, due to its proximity to Swan Street, where traffic noise was noted to be dominant and as such this approach is considered to be conservative.

The microphone was positioned away from acoustically reflective sources and at a height of 1.7 meters above ground as to be in free-field conditions.

It was not possible to leave the sound level meter (SLM) unattended for security reasons and as such attended noise measurements have been carried out from 09:30 to 12:30 hrs and from 23:00 to 01:00 hrs. This is the time at which the background noise is the quietest for the proposed operation hours.

The SLM was setup to measure L_{Aeq} values over 1 second intervals and a wind-shield was used as a precaution against interference.

The measurements were carried out in the absence of rain or wind speeds higher than 5 m/s.

The SLM used meet the technical specifications of BS 7445 [1] and have current calibration certificates traceable to national standards. The equipment was field-calibrated before and after the measurements with no significant drift in sensitivity noted.

Table 2 – Equipment used

Equipment	Model	Serial no.
Sound Level Meter	SV307	82048
Calibrator	(with built-in calibrator)	

© copyright 2021 Yacoustics – All rights reserved

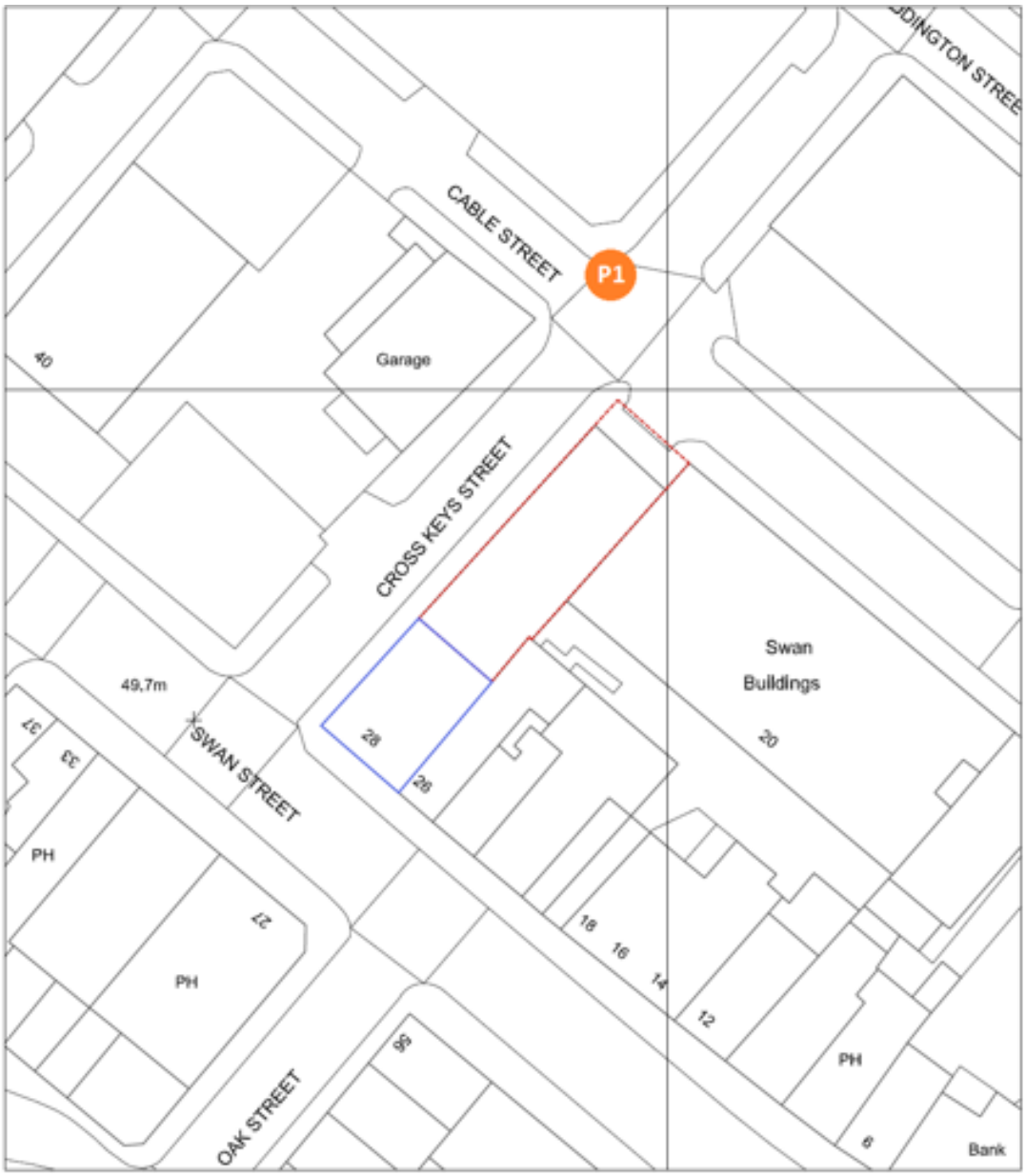

Figure 6 – Measurement position

4.2 Results

The results of the site survey are outlined in Table 3.

The representative L_{A90} values for both the day and the night-time periods is 56 dB(A) and 47 dB(A), respectively.

© copyright 2021 Yacoustics – All rights reserved

Table 3 – Site survey results

Period		L_{Aeq}	L_{A90}
Day	09:30-10:30	61	56
	10:30-11:30	61	56
	11:30-12:30	60	55
	22:00-23:00	61	52
Night	23:00-23:15	59	49
	23:15-23:30	59	48
	23:30-23:45	57	47
	23:45-00:00	59	48
	00:00-00:15	57	47
	00:15-00:30	56	47
	00:30-00:45	57	47
	00:45-01:00	55	47

4.3 Adjustments due to the impact of COVID-19

Due to the restrictions set out by the Government due to the ongoing COVID-19 crisis, current average noise levels due to transport and commercial sources are not typical.

In this instance, the recorded background noise levels are therefore lower than in normal conditions and as such the stated values represent a worst-case scenario.

© copyright 2021 Yacoustics – All rights reserved

5 Environmental noise break-out

5.1 Methodology

Predictions of the specific noise emitted by the proposed development have been carried out in line with the methodology laid out in BS EN ISO 12354 [7] and the literature entitled Acoustics and Noise Control [10], using the following equations:

$$\text{for } d < \frac{a}{\pi}, SPL_{rcv} = L_w + 10log\Big(\frac{\pi}{4ab}\Big) + 0.5 \tag{5.1}$$

$$\text{for } d < \frac{b}{\pi}, SPL_{rcv} = L_w - 10log(d) - 10log(b) + 0.5 \tag{5.2}$$

$$\text{for larger values of d}, SPL_{rcv} = L_w - 20log(d) - 11 + 0.5 \tag{5.3}$$

$$L_w = SPL_{fcd} + 10log(a.b) \tag{5.4}$$

$$SPL_{fcd} = SPL_{inside} - R - k \tag{5.5}$$

where

a is the height of the emitting element;

b is the width of the emitting element;

d is the distance between the source and the receiver;

L_w is the sound power level (SWL) of the emitting element;

R is the sound reduction index of the emitting element; and

k is the environmental adjustment factor.

© copyright 2021 Yacoustics – All rights reserved

Typical internal reverberant noise levels for a busy restaurant have been taken from the published book: The Little Red Book of Acoustics [9] and are presented as Table 4.

Table 4 – Typical spectral L_{eq} for a busy restaurant (source: The little Red Book of Acoustics 2012 [9])

Space	Octave band (Hz) L_{eq}(dB)							Global
	63	125	250	500	1k	2k	4k	dB(A)
Busy restaurant	60	70	75	75	75	75	70	80

Following an analysis of the proposed architectural strategy and conversations with the client, it is understood that the glazing for the proposed development, will consist of standard double glazing. i.e. 4/16/4 mm and that the roof construction will consist of a *Kingspan KS1000 RW*, details of which are presented as Annex B.

The expected acoustics performances of these solutions are as presented in Table 5.

Table 5 – Proposed glazing acoustic performance

Element	Octave band (Hz) R dB						
	63	125	250	500	1k	2k	4k
4/16/4 mm glazing	17	21	17	25	35	37	31
Kingspan KS 1000 RW	20	18	20	24	20	29	39

In line with the requirements set out in BS EN ISO 12354-4 [3] each radiating surface has been divided in smaller elements as indicated in Figure 7 and the environmental adjustment factor k is 6 dB.

NOTE: It is understood that during the summer months, the client intends to open window 2 and window 3. As such, break-out noise calculations at noise sensitive receiver(s) (NSR) B and C[1] have also been carried out to assess its suitability.

[1] NSR B and C are the most affected by open windows

© copyright 2021 Yacoustics – All rights reserved

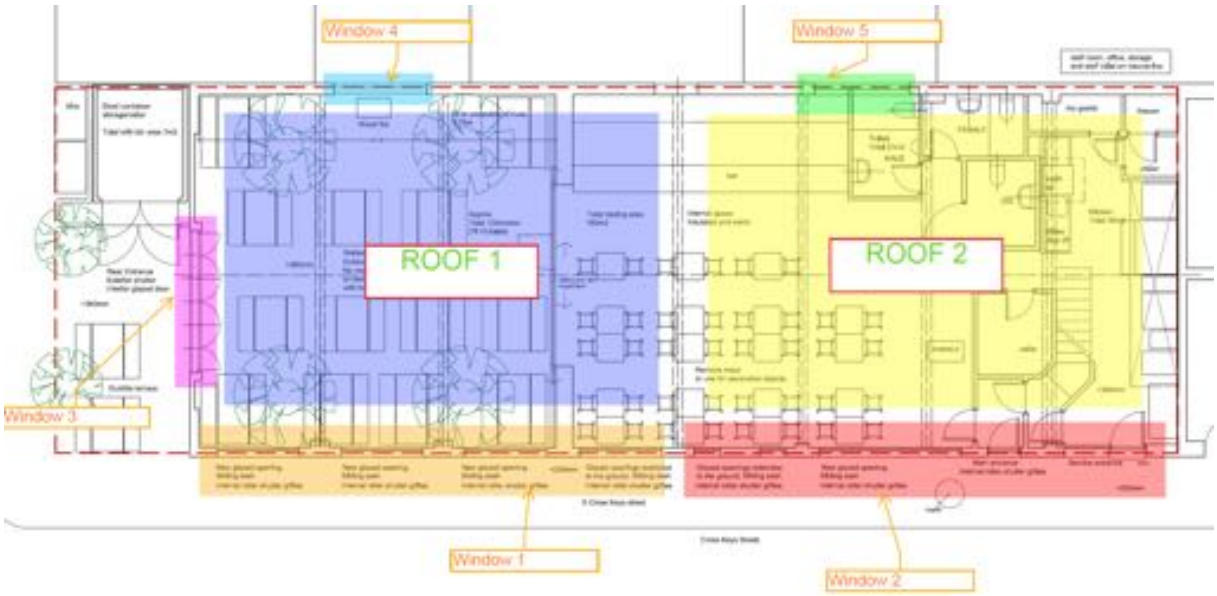

Figure 7 – Identification of each radiating surface which forms part of the proposed development

5.2 Results

The expected specific sound levels at each NSR are presented as Table 7.

A BS 4142 [5] assessment has been carried out and is presented as Table 9. It can be seen that no impacts are expected, in line with the requirements set out by the MCC.

Windows **can be opened during the day-time period only**, i.e. from 07:00 to 23:00 hrs.

© copyright 2021 Yacoustics – All rights reserved

Table 6 – Calculated specific sound levels at NSR A and B (environmental noise break-out)

NSR	Radiating element	Octave band L_{Aeq}dB							Global
		63	125	250	500	1 k	2 k	4 k	dB(A)
A	Window 4	1	17	33	31	24	23	24	36
	Window 5	-5	11	27	25	18	17	18	30
	Roof 1	5	27	37	39	46	38	23	48
	Roof 2	5	27	37	39	46	38	23	48
	All	9	31	41	43	49	42	29	51
B	Window 1	-17	-1	15	13	6	5	6	18
	Window 2	-21	-5	11	9	2	1	2	14
	Window 3	-19	-3	13	11	4	3	4	16
	Roof 1	-12	10	20	22	29	21	6	31
	Roof 2	-14	8	18	20	27	19	4	29
	All	-8	13	24	25	31	23	12	33
B*	Window 1	-17	-1	15	13	6	5	6	18
	Window 2 (OPEN)	-7	13	25	31	34	35	30	40
	Window 3 (OPEN)	-2	18	30	36	39	40	35	44
	Roof 1	-12	10	20	22	29	21	6	31
	Roof 2	-14	8	18	20	27	19	4	29
	All	0	20	32	37	41	41	36	46

* calculations carried out with open windows (see Figure 7 Windows 2 and 3)

© copyright 2021 Yacoustics – All rights reserved

Table 7 – Calculated specific sound levels at NSR C and D (environmental noise break-out)

NSR	Radiating element	Octave band L_{Aeq}dB							Global
		63	125	250	500	1 k	2 k	4 k	dB(A)
C	Window 1	-15	1	17	15	8	7	8	20
	Window 2	-14	2	18	16	9	8	9	21
	Window 3	-22	-6	10	8	1	0	1	13
	Roof 1	-4	18	28	30	37	29	14	39
	Roof 2	-10	12	22	24	31	23	8	33
	All	-2	19	30	31	38	30	17	40
C*	Window 1	-15	1	17	15	8	7	8	20
	Window 2 (OPEN)	3	23	35	41	44	45	40	49
	Window 3 (OPEN)	-5	15	27	33	36	37	32	41
	Roof 1	-4	18	28	30	37	29	14	39
	Roof 2	-10	12	22	24	31	23	8	33
	All	4	25	36	42	45	45	40	50
D	Window 1	-9	7	23	21	14	13	14	26
	Window 2	-14	2	18	16	9	8	9	21
	Window 3	-18	-2	14	12	5	4	5	17
	Roof 1	-7	15	25	27	34	26	11	36
	Roof 2	-7	15	25	27	34	26	11	36
	All	-3	18	29	31	37	29	18	39
D*	Window 1	-9	7	23	21	14	13	14	26
	Window 2 (OPEN)	3	23	35	41	44	45	40	21
	Window 3 (OPEN)	-1	19	31	37	40	41	36	17
	Roof 1	-7	15	25	27	34	26	11	36
	Roof 2	-7	15	25	27	34	26	11	36
	All	5	25	37	42	46	46	41	51

* calculations carried out with open windows (see Figure 7 Windows 2 and 3)

© copyright 2021 Yacoustics – All rights reserved

Table 8 – BS 4142 assessment results for NSR A and B (environmental noise break-out)

NSR	Parameter		Commentary
NSR A	Background sound level	L_{A90}= 56 dB (1 hour)	The background sound level was measured during the day-time (time at which NSR A operates)
	Specific sound level	L_{Aeq}= 51	-
	Acoustic feature correction	0	Additive penalties are not applicable
	Rating level	$L_{Ar,Tr}$=51 + 0 = 51 dB	
	Excess of rating level over background sound level	51-56 = -5 dB	Assessment indicates no impacts at NSR A
NSR B	Background sound level	L_{A90}= 47 dB (15 min)	The background sound level was measured during the quietest time of the night (for the proposed development proposed operation hours, i.e. 09:00 hrs to 02:00 hrs)
	Specific sound level	L_{Aeq}= 33	-
	Acoustic feature correction	0	Additive penalties are not applicable
	Rating level	$L_{Ar,Tr}$=33 + 0 = 33 dB	
	Excess of rating level over background sound level	33-47 = -14 dB	Assessment indicates no impacts at NSR B
NSR B*	Background sound level	L_{A90}= 56 dB (1 hour)	The background sound level was measured during the day-time
	Specific sound level	L_{Aeq}= 46	-
	Acoustic feature correction	0	Additive penalties are not applicable
	Rating level	$L_{Ar,Tr}$=46 + 0 = 46 dB	
	Excess of rating level over background sound level	46-56 = -10 dB	Assessment indicates no impacts at NSR B

* calculations carried out with open windows (see Figure 7 Windows 2 and 3)

© copyright 2021 Yacoustics – All rights reserved

Table 9 – BS 4142 assessment results for NSR C (environmental noise break-out)

NSR	Parameter		Commentary
NSR C	Background sound level	L_{A90}= 47 dB (15 min)	The background sound level was measured during the night-time
	Specific sound level	L_{Aeq}= 40	-
	Acoustic feature correction	0	Additive penalties are not applicable
	Rating level	$L_{Ar,Tr}$=40 + 0 = 40 dB	
	Excess of rating level over background sound level	40-47 = -7 dB	Assessment indicates no impacts at NSR C
NSR C*	Background sound level	L_{A90}= 56 dB (1 hour)	The background sound level was measured during the day-time
	Specific sound level	L_{Aeq}= 50	-
	Acoustic feature correction	0	Additive penalties are not applicable
	Rating level	$L_{Ar,Tr}$=50 + 0 = 50 dB	
	Excess of rating level over background sound level	50-56 = -6 dB	Assessment indicates no impacts at NSR C
NSR D	Background sound level	L_{A90}= 47 dB (15 min)	The background sound level was measured during the night-time
	Specific sound level	L_{Aeq}= 39	-
	Acoustic feature correction	0	Additive penalties are not applicable
	Rating level	$L_{Ar,Tr}$=39 + 0 = 40 dB	
	Excess of rating level over background sound level	39-47 = -8 dB	Assessment indicates no impacts at NSR D
NSR D*	Background sound level	L_{A90}= 56 dB (1 hour)	The background sound level was measured during the day-time
	Specific sound level	L_{Aeq}= 51	-
	Acoustic feature correction	0	Additive penalties are not applicable
	Rating level	$L_{Ar,Tr}$=51 + 0 = 50 dB	
	Excess of rating level over background sound level	51-56 = -5 dB	Assessment indicates no impacts at NSR D

* calculations carried out with open windows (see Figure 7 Windows 2 and 3)

© copyright 2021 Yacoustics – All rights reserved

6 Noise transfer

6.1 Methodology

The methodology adopted to determine the airborne sound transmission between the development premises and the adjacent apartment units and offices is in line with the literature *Acoustics and Noise Control* [10].

The method can be briefly described as follows:

1. Determination of L_2 in line with the following equation:

$$R = L_1 - L_2 + 10log\frac{S_s}{A} \tag{6.1}$$

   where

   a) R is the sound reduction index of the excited element (floor);
   b) L_1 is the average sound pressure level in the source room, in decibels;
   c) L_2 is the average sound pressure level in the receiving room, in decibels;
   d) A is the equivalent sound absorption area in the receiving room, in square metres; and
   e) S_s is the are of the separating element, in square metres.

The relevant areas and volumes have been taken from the architectural drawings provided.

The average sound pressure level in the source room is as indicated in Table 4.

The reverberation time of the receiving rooms is considered to be 0.5 seconds.

© copyright 2021 Yacoustics – All rights reserved

6.2 Adjacent apartment units

The adjacent apartment units are located as indicated in Figure 8.

It is understood that the existing brick wall thickness is at least 100 mm.

To safeguard appropriate IANLs within the adjacent apartment units, the wall between the proposed restaurant and the existing apartment units is required to provide a minimum airborne sound insulation of 64 dB R_w.

A solution compatible with the required performance is presented as Figure 9. It is expected that with this solution in place, the IANLs will remain below 25 dB L_{Aeq}.

Calculation details are included in Annex D.

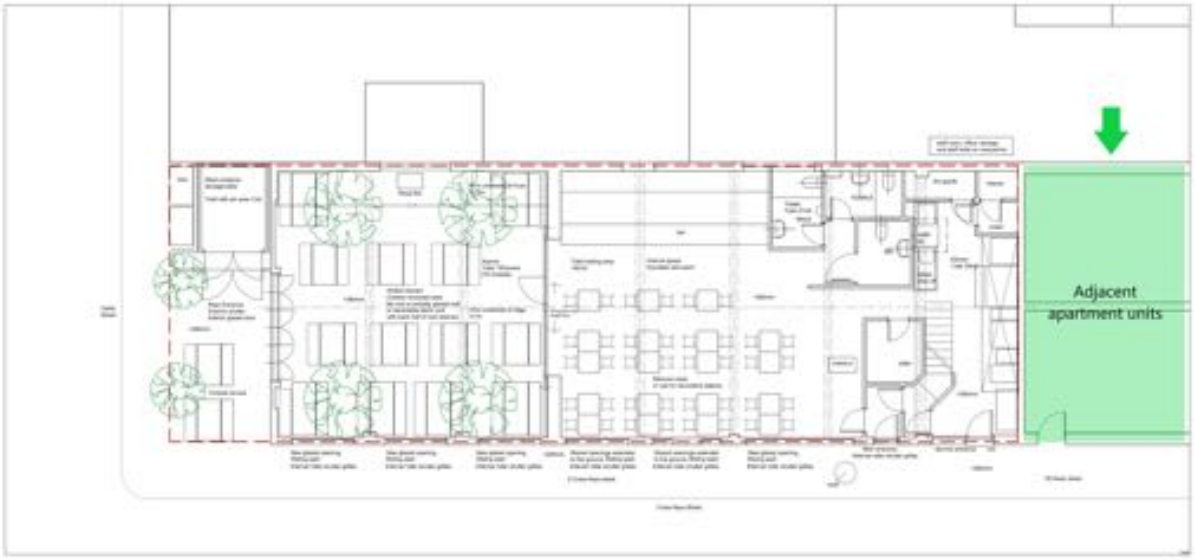

Figure 8 – Apartments location

© copyright 2021 Yacoustics – All rights reserved

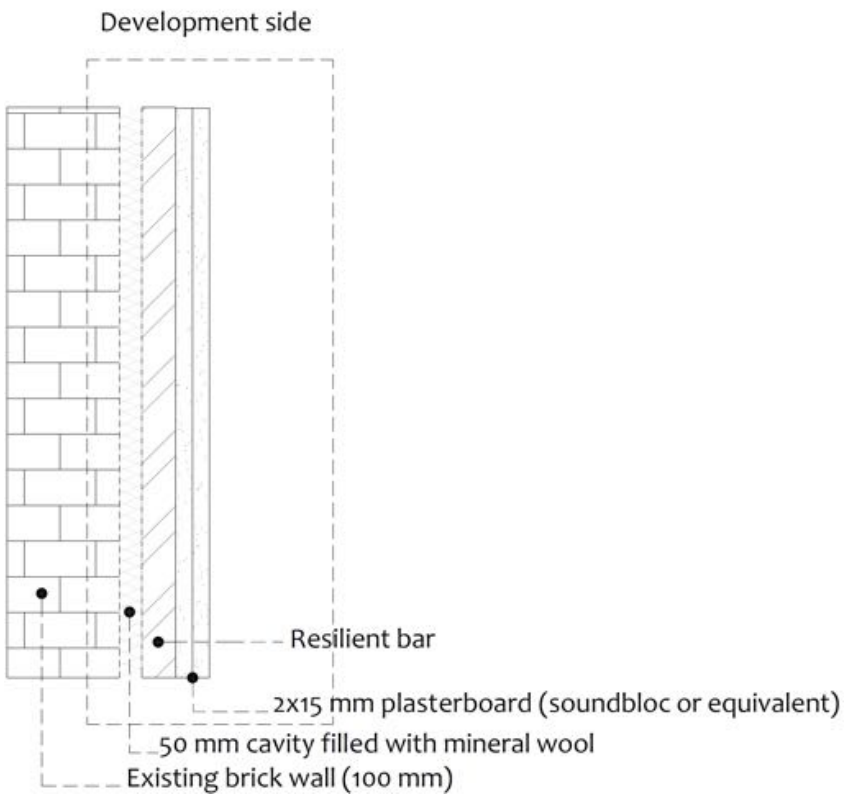

Figure 9 – Proposed wall build-up (between the proposed restaurant and the adjacent apartment units)

6.3 Adjacent offices

The adjacent office space location and the existing relevant constructions are indicated in Figure 10.

It is understood that the existing separation wall consists of 400 mm of brick which is suitable to control noise transfer between the proposed restaurant and the existing offices.

However, the existing metal door reduces the masonry wall acoustic resistance substantially, and as such, to safeguard appropriate IANLs within the office spaces, the solution presented as Figure 11 is proposed to be installed immediately behind the existing metal door.

Such solution is expected to provide a minimum airborne sound insulation of 68 dB R_w and it is expected that the IANLs within offices will remain below 20 dB L_{Aeq}.

Calculation details are included in Annex D.

© copyright 2021 Yacoustics – All rights reserved

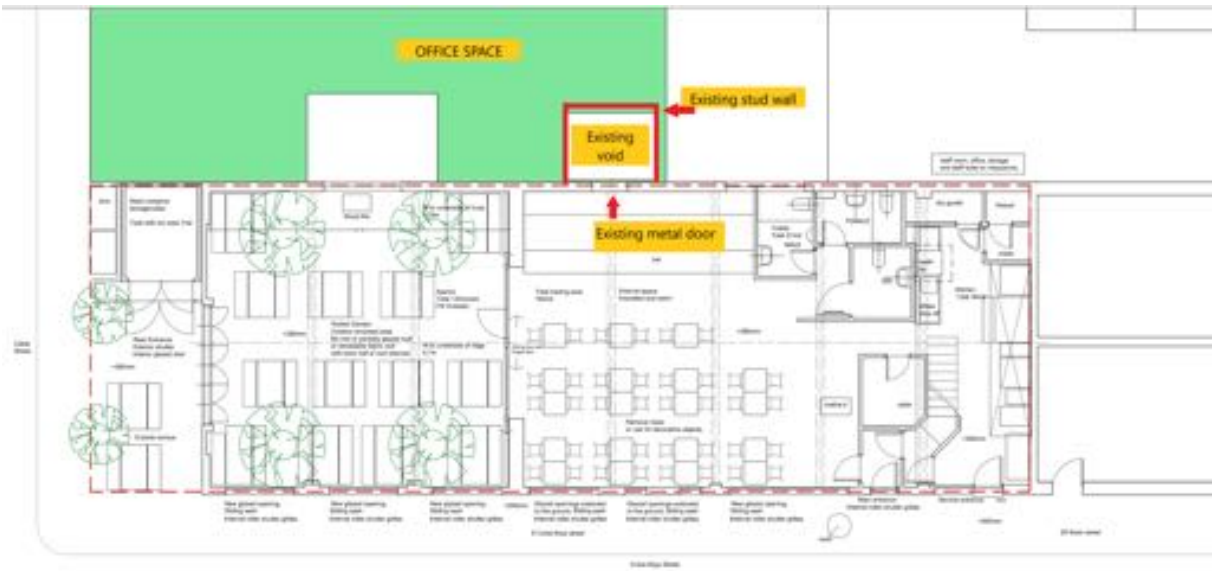

Figure 10 – Offices location

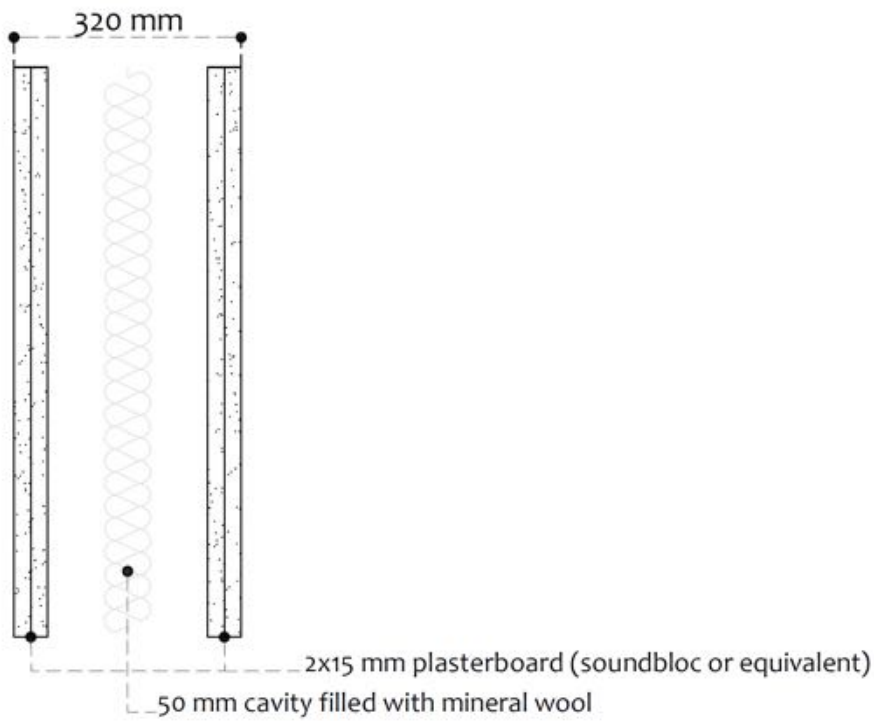

Figure 11 – Proposed wall build-up (to be placed behind the existing metal door)

© copyright 2021 Yacoustics – All rights reserved

7 Noise from fixed plant

7.1 Methodology

As previously mentioned, it is understood that extraction and air input fans are required for the kitchen area.

Details for the proposed fans are presented as Annex E.

In line with the proposed fans location (see Figure 4), plant noise impacts have been determined at each NSR.

Calculations have been carried out in line with the principles set out in *Smith et al.* [10]. The equation and considerations used can be briefly described as follows:

$$L_w = L_p + 20log(r) + 11 \tag{7.1}$$

where:

L_w is the sound power level of the relevant source, in decibels;

L_p is the sound pressure level at the relevant receiver, in decibels;

r is the overall distance between source and receiver, in decibels.

For reference, the average distance between the extract and air input fans and each NSR **closest window** are as follows:

NSR A Approximately 5 meters from both fans;

NSR B Approximately 25 meters from both fans; and

NSR C Approximately 25 meters from both fans.

NSR D Approximately 17 meters from both fans.

© copyright 2021 Yacoustics – All rights reserved

7.2 Results

The expected specific sound levels due to both the extract and the air input fans at NSR A, are presented as Table 10.

It can be seen that without mitigation measures in place the noise criteria is significantly exceeded and as such mitigation measures are required.

Table 10 – Calculated specific sound levels at NSR A (noise from fixed plant with no mitigation)

Parameter		Octave band frequency, Hz							Global
		63	125	250	500	1 k	2 k	4 k	
Extract	SWL	91	93	101	96	96	97	90	105
	End reflection loss (500 mm)	-11	-6	-2	-1	0	0	0	-
	SWL to SPL	-11	-11	-11	-11	-11	-11	-11	-
	distance loss (5 m)	-14	-14	-14	-14	-14	-14	-14	-
	$L_{eq,T}$at NSR A	55	68	76	71	71	72	65	80
	L_{Aeq}at NSR A	29	52	67	68	71	73	66	77
Air input	SWL	81	82	78	77	75	71	68	87
	End reflection loss (500 mm)	-11	-6	-2	-1	0	0	0	-
	SWL to SPL	-11	-11	-11	-11	-11	-11	-11	-
	distance loss (5 m)	-14	-14	-14	-14	-14	-14	-14	-
	$L_{eq,T}$at NSR A	45	51	51	51	50	46	43	58
	L_{Aeq}at NSR A	19	35	42	48	50	47	44	54
Total	L_{Aeq}at NSR A (w attenuators)	29	52	67	68	71	73	66	77

7.3 Noise mitigation measures

Both fans require duct attenuators with a minimum insertion loss as presented in Table 11.

The expected specific sound levels at NSR A, B, C and D with the attenuators in place, are presented as Tables 12, 13 and 14.

A BS 4142 [5] assessment has been carried out and is presented as Table 16. It can be seen that with the proposed attenuators, no impacts are expected at the identified sensitive receivers.

© copyright 2021 Yacoustics – All rights reserved

An example of a suitable product manufacturer is presented in Annex F.

Table 11 – Duct attenuators - insertion loss requirements

Unit	Octave band insertion loss (IL)						
	63	125	250	500	1 k	2 k	4 k
Air input fan (Intake side)	3	8	14	29	33	39	33
Extract fan (Outlet side)	9	13	22	32	36	35	31

Table 12 – Calculated specific sound levels at NSR A (noise from fixed plant with mitigation)

Parameter		Octave band frequency, Hz							Global
		63	125	250	500	1 k	2 k	4 k	
Extract	SWL	91	93	101	96	96	97	90	104
	End reflection loss (500 mm)	-11	-6	-2	-1	0	0	0	-
	SWL to SPL	-11	-11	-11	-11	-11	-11	-11	-
	distance loss (5 m)	-14	-14	-14	-14	-14	-14	-14	-
	$L_{eq,T}$at NSR A	55	62	74	70	71	72	65	78
	L_{Aeq}at NSR A	29	46	65	67	71	73	66	76
	Duct attenuator (1800mm)	9	13	22	32	36	35	31	10
	L_{Aeq}at NSR A (w attenuator)	20	33	43	35	35	38	35	45
Air input	SWL	81	82	78	77	75	71	68	87
	End reflection loss (500 mm)	-11	-6	-2	-1	0	0	0	
	SWL to SPL	-11	-11	-11	-11	-11	-11	-11	-
	distance loss (5 m)	-14	-14	-14	-14	-14	-14	-14	-
	$L_{eq,T}$at NSR A	45	51	51	51	50	46	43	58
	L_{Aeq}at NSR A	19	35	42	48	50	47	44	54
	Duct attenuator (900 mm)	3	8	14	29	33	39	33	-
	L_{Aeq}at NSR A (w attenuator)	16	27	28	19	17	8	11	31
Total	L_{Aeq}at NSR A (w attenuators)	21	34	43	35	35	38	35	45

© copyright 2021 Yacoustics – All rights reserved

Table 13 – Calculated specific sound levels at NSR B (noise from fixed plant with mitigation)

Parameter		Octave band frequency, Hz							Global
		63	125	250	500	1 k	2 k	4 k	
Extract	SWL	91	93	101	96	96	97	90	105
	End reflection loss (500 mm)	-11	-6	-2	-1	0	0	0	-
	SWL to SPL	-11	-11	-11	-11	-11	-11	-11	-
	distance loss (25 m)	-28	-28	-28	-28	-28	-28	-28	-
	$L_{eq,T}$at NSR A	41	48	60	56	57	58	51	64
	L_{Aeq}at NSR A	15	32	51	53	57	59	52	63
	Duct attenuator	9	13	22	32	36	35	31	-
	L_{Aeq}at NSR A (w attenuator)	6	19	29	21	21	24	21	32
Air input	SWL	81	82	78	77	75	71	68	87
	End reflection loss (500 mm)	-11	-6	-2	-1	0	0	0	
	SWL to SPL	-11	-11	-11	-11	-11	-11	-11	-
	distance loss (25 m)	-14	-14	-14	-14	-14	-14	-14	-
	$L_{eq,T}$at NSR A	45	51	51	51	50	46	43	58
	L_{Aeq}at NSR A	19	35	42	48	50	47	44	54
	Duct attenuator (900 mm)	3	8	14	29	33	39	33	-
	L_{Aeq}at NSR A (w attenuator)	16	27	28	19	17	8	11	31
Total	L_{Aeq}at NSR B (w attenuators)	16	28	31	23	22	24	21	34

© copyright 2021 Yacoustics – All rights reserved

Table 14 – Calculated specific sound levels at NSR C (noise from fixed plant with mitigation)

Parameter		Octave band frequency, Hz							Global
		63	125	250	500	1 k	2 k	4 k	
Extract	SWL	91	93	101	96	96	97	90	105
	End reflection loss (500 mm)	-11	-6	-2	-1	0	0	0	-
	SWL to SPL	-11	-11	-11	-11	-11	-11	-11	-
	distance loss (25 m)	-28	-28	-28	-28	-28	-28	-28	-
	$L_{eq,T}$at NSR A	41	48	60	56	57	58	51	64
	L_{Aeq}at NSR A	15	32	51	53	57	59	52	63
	Duct attenuator (900 mm)	9	13	22	32	36	35	31	-
	L_{Aeq}at NSR A (w attenuator)	6	19	29	21	21	24	21	32
Air input	SWL	81	82	78	77	75	71	68	87
	End reflection loss (500 mm)	-11	-6	-2	-1	0	0	0	
	SWL to SPL	-11	-11	-11	-11	-11	-11	-11	-
	distance loss (25 m)	-28	-28	-28	-28	-28	-28	-28	-
	$L_{eq,T}$at NSR A	31	37	37	37	36	32	29	44
	L_{Aeq}at NSR A	5	21	28	34	36	33	30	40
	Duct attenuator (900 mm)	3	8	14	29	33	39	33	-
	L_{Aeq}at NSR A (w attenuator)	2	13	14	5	3	-6	-3	17
Total	L_{Aeq}at NSR C (w attenuators)	7	20	29	21	21	24	21	32

© copyright 2021 Yacoustics – All rights reserved

Table 15 – Calculated specific sound levels at NSR D (noise from fixed plant with mitigation)

Parameter		Octave band frequency, Hz							Global
		63	125	250	500	1 k	2 k	4 k	
Extract	SWL	91	93	101	96	96	97	90	105
	End reflection loss (500 mm)	-11	-6	-2	-1	0	0	0	-
	SWL to SPL	-11	-11	-11	-11	-11	-11	-11	-
	distance loss (17 m)	-25	-25	-25	-25	-25	-25	-25	-
	$L_{eq,T}$at NSR A	44	51	63	59	60	61	54	68
	L_{Aeq}at NSR A	18	35	54	56	60	62	55	66
	Duct attenuator	9	13	22	32	36	35	31	-
	L_{Aeq}at NSR A (w attenuator)	9	22	32	24	24	27	24	35
Air input	SWL	81	82	78	77	75	71	68	87
	End reflection loss (500 mm)	-11	-6	-2	-1	0	0	0	
	SWL to SPL	-11	-11	-11	-11	-11	-11	-11	-
	distance loss (17 m)	-25	-25	-25	-25	-25	-25	-25	-
	$L_{eq,T}$at NSR A	34	40	40	40	39	35	32	47
	L_{Aeq}at NSR A	8	24	31	37	39	36	33	43
	Duct attenuator (900 mm)	3	8	14	29	33	39	33	-
	L_{Aeq}at NSR A (w attenuator)	5	16	17	8	6	-3	0	21
Total	L_{Aeq}at NSR A (w attenuators)	11	23	32	24	24	27	24	35

© copyright 2021 Yacoustics – All rights reserved

Table 16 – BS 4142 assessment results (noise from fixed plant)

NSR	Parameter		Commentary
NSR A	Background sound level	L_{A90}= 56 dB (1 hour)	The background sound level was measured during the day-time (time at which NSR A operates)
	Specific sound level	L_{Aeq}= 45	-
	Acoustic feature correction	3+3	Penalties for tonality and intermittency
	Rating level	$L_{Ar,Tr}$=45 + 6 = 51 dB	
	Excess of rating level over background sound level	51-56 = -5 dB	Assessment indicates no impacts at NSR A
NSR B	Background sound level	L_{A90}= 47 dB (15 min)	The background sound level was measured during the night-time
	Specific sound level	L_{Aeq}= 34	-
	Acoustic feature correction	3+3	Penalties for tonality and intermittency
	Rating level	$L_{Ar,Tr}$=34 + 6 = 40 dB	
	Excess of rating level over background sound level	40-47 = -7 dB	Assessment indicates no impacts at NSR B
NSR C	Background sound level	L_{A90}= 47 dB (15 min)	The background sound level was measured during the night-time
	Specific sound level	L_{Aeq}= 32	-
	Acoustic feature correction	3+3	Penalties for tonality and intermittency
	Rating level	$L_{Ar,Tr}$=32 + 6 = 38 dB	
	Excess of rating level over background sound level	38-47 = -9 dB	Assessment indicates no impacts at NSR C
NSR D	Background sound level	L_{A90}= 47 dB (15 min)	The background sound level was measured during the night-time
	Specific sound level	L_{Aeq}= 35	-
	Acoustic feature correction	3+3	Penalties for tonality and intermittency
	Rating level	$L_{Ar,Tr}$=35 + 6 = 41 dB	
	Excess of rating level over background sound level	41-47 = -6 dB	Assessment indicates no impacts at NSR D

© copyright 2021 Yacoustics – All rights reserved

8 External seating area

8.1 Methodology

The proposed development includes a small external seating area that can accommodate a maximum of 12 people, as indicated in Figure 12.

To determine the potential noise impacts associated with the usage of the external seating area by future patrons, the methodology set out in Section 7.1 was used.

In line with the information issued by the MCC, the calculations carried out consider that a maximum of 6 patrons may be talking simultaneously at raised voice speech levels.

In line with ISO 3382-3 [2] it is considered that the average sound pressure level (SPL) for the raised human voice is approximately 63 dB(A) at 1 meter distance.

For reference, the average distance between the external seating area and each NSR **closest window** are as follows:

NSR A Approximately 12 meters;

NSR B Approximately 20 meters;

NSR C Approximately 30 meters; and

NSR D Approximately 14 meters.

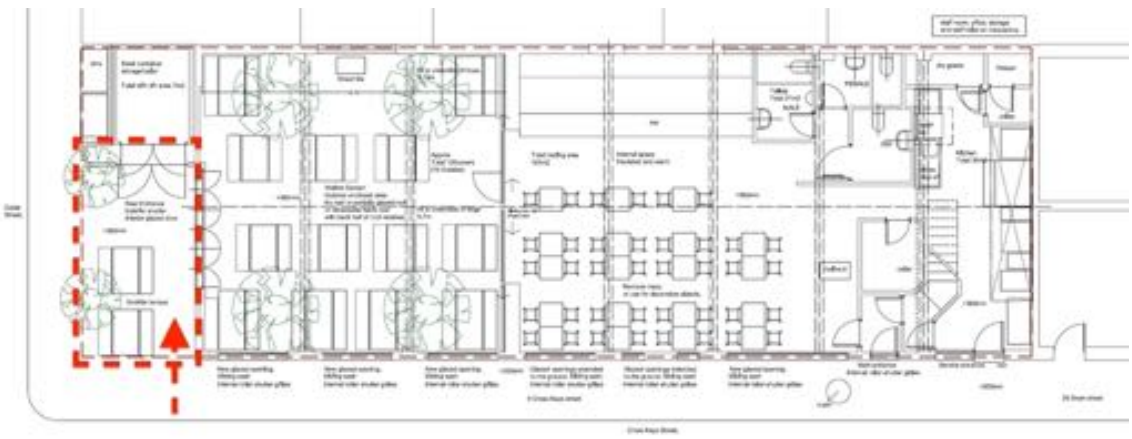

Figure 12 – Proposed kitchen extraction strategy

© copyright 2021 Yacoustics – All rights reserved

8.2 Results

The expected noise levels at each NSR are presented as Table 17.

It can be seen that noise emissions at each NSR are expected to be similar or lower than the recorded background noise levels and as such no impacts are expected.

Table 17 – Calculated noise levels at each NSR

Parameter	SPL dB(A)
SPL for raised human voice	60
Total SPL (8 patrons taking simultaneously)	68
Total SPL at NSR A (12 meters distance)	47
Total SPL at NSR B (20 meters distance)	42
Total SPL at NSR C (30 meters distance)	39
Total SPL at NSR D (14 meters distance)	45

© copyright 2021 Yacoustics – All rights reserved

Final considerations

This report has presented the results of environmental noise measurements to assess the impacts of noise emissions associated with a proposed change of use from E(a) to E(b) at 4 Cross Keys Street, Manchester, M4 5ET.

Reference has been made to the MCC Planning & Noise Technical Guidance document [6] which sets limits for noise break-out, noise transfer and fixed plant noise at sensitive receivers.

The noise measurements have been used to determine the mitigation requirements necessary to achieve the set limits.

The noise assessment indicates that the requirements set out by the MCC can be achieved, with the recommended mitigation solutions in place.

Based on the implementation of the recommendations provided in this report, the proposed change of use is considered to be suitable in line with the MCC planning policies and the recommendations of the NPPF [8] and the NPSE [4].

© copyright 2021 Yacoustics – All rights reserved

Bibliography

[1] BS 7445-2:1991, Description and measurement of environmental noise - Part 2: Guide to the acquisition of data pertinent to land use. Standard, BSI, 1991. Cited in page 15.

[2] BS EN ISO 3382-1:2009 Measurement of room acoustic parameters - Part 3: Open plan offices. Standard, BSI, 2009. Cited in page 36.

[3] BS EN ISO 10140-4:2010 Laboratory measurement of sound insulation of building elements - Part 4: Measurement procedures and requirements. Standard, BSI, 2010. Cited in page 19.

[4] Noise Policy Statement for England (NPSE). Technical document, Department For Environmental, Food And Rural Affairs, 2010. Cited 3 on pages 13, 38, and 42.

[5] BS 4142:2014, Methods for rating and assessing industrial and commercial sound. Standard, BSI, 2014. Cited 2 on pages 20 and 30.

[6] Planning & Noise Technical Guidance. Technical document, Manchester City Council, 2015. Cited 3 on pages 7, 13, and 38.

[7] BS EN ISO 12354-3:2017, Estimation of acoustic performance in buildings from the performance of elements - Part 4: Transmission of indoor sound to the outside sound. Standard, 2017. Cited in page 18.

[8] National Planning Policy Framework. Technical document, Ministry of Housing, communities and local government, 2018. Cited 3 on pages 13, 38, and 41.

[9] R. Watson & Owen Downey. *The Little Red Book of Acoustics*. Blue Tree Acoustics, 2012. Cited in page 19.

[10] B.J Smith & Margaret Hollins R.J. Peters. *Acoustics and Noise Control*. Routledge, 2013. Cited 3 on pages 18, 25, and 29.

© copyright 2021 Yacoustics – All rights reserved

Annexes

© *copyright* 2021 Yacoustics – All rights reserved

ANNEX A – National Planning Policy

A.1 National Planning Policy Framework (NPPF)

The National Planning Policy Framework [8] sets out the Government's planning policies for England and how these should be applied. It provides a framework within which locally-prepared plans for housing and other development can be produced.

In regards to noise, Paragraphs 170, 180, 204 and 205 state the following:

170. Planning policies and decisions should contribute to and enhance the natural and local environment by:

    e) preventing new and existing development from contributing to, being put at unacceptable risk from, or being adversely affected by, unacceptable levels of soil, air, water or noise pollution or land instability. Development should, wherever possible, help to improve local environmental conditions such as air and water quality, taking into account relevant information such as river basin management plans.

180. Planning policies and decisions should also ensure that new development is appropriate for its location taking into account the likely effects (including cumulative effects) of pollution on health, living conditions and the natural environment, as well as the potential sensitivity of the site or the wider area to impacts that could arise from the development. In doing so they should:

    a) mitigate and reduce to a minimum potential adverse impacts resulting from noise from new development – and avoid noise giving rise to significant adverse impacts on health and the quality of life;

    b) identify and protect tranquil areas which have remained relatively undisturbed by noise and are prized for their recreational and amenity value for this reason.

204. Planning policies should:

    g) when developing noise limits, recognise that some noisy short-term activities, which may otherwise be regarded as unacceptable, are unavoidable to facilitate minerals extraction.

© copyright 2021 Yacoustics – All rights reserved

205. When determining planning applications, great weight should be given to the benefits of mineral extraction, including to the economy. In considering proposals for mineral extraction, minerals planning authorities should:

    c) ensure that any unavoidable noise, dust and particle emissions and any blasting vibrations are controlled, mitigated or removed at source, and establish appropriate noise limits for extraction in proximity to noise sensitive properties.

A.2 Noise Policy Statement for England (NPSE)

The Noise Policy Statement for England [4] long term vision is to *"Promote good health and a good quality of life through the effective management of noise within the context of Government policy on sustainable development"*.

The NPSE states the three following policy aims:

First Aim:

Avoid significant adverse impacts on health and quality of life from environmental, neighbour and neighbourhood noise within the context of Government policy on sustainable development;

Second Aim:

Mitigate and minimise adverse impacts on health and quality of life from environmental, neighbour and neighbourhood noise within the context of Government policy on sustainable development;

Third Aim:

Where possible, contribute to the improvement of health and quality of life through the effective management and control of environmental, neighbour and neighbourhood noise within the context of Government policy on sustainable development.

The NPSE uses two established concepts from toxicology that are currently being applied to noise impacts, for example, by the World Health Organisation. These are extended to the concept of a significant observed adverse effect level as follows:

NOEL – No Observed Effect Level

© copyright 2021 Yacoustics – All rights reserved

This is the level below which no effect can be detected. In simple terms, below this level, there is no detectable effect on health and quality of life due to the noise.

LOAEL – Lowest Observed Adverse Effect Level

This is the level above which adverse effects on health and quality of life can be detected.

SOAEL – Significant Observed Adverse Effect Level

This is the level above which significant adverse effects on health and quality of life occur.

The first aim of the NPSE states that significant adverse effects on health and quality of life should be avoided while also taking into account the guiding principles of sustainable development (paragraph 1.8).

The second aim of the NPSE refers to the situation where the impact lies somewhere between LOAEL and SOAEL. It requires that all reasonable steps should be taken to mitigate and minimise adverse effects on health and quality of life while also taking into account the guiding principles of sustainable development (paragraph 1.8). This does not mean that such adverse effects cannot occur.

The third aim seeks, where possible, positively to improve health and quality of life through the pro-active management of noise while also taking into account the guiding principles of sustainable development (paragraph 1.8), recognising that there will be opportunities for such measures to be taken and that they will deliver potential benefits to society. The protection of quiet places and quiet times as well as the enhancement of the acoustic environment will assist with delivering this aim.

© copyright 2021 Yacoustics – All rights reserved

ANNEX B – Kingspan KS 1000 RW

© copyright 2021 Yacoustics – All rights reserved

Insulated Panel Systems
United Kingdom

Protected by Kingspan WARRANTY

QuadCore Trapezoidal Roof Panel (RW)

KS1000 RW

Data Sheet

© copyright 2021 Yacoustics – All rights reserved

POWERED BY QuadCore™ TECHNOLOGY

Kingspan®

QuadCore™ RW Trapezoidal Roof Panel

Applications

The KS1000 RW is a through-fix trapezoidal profiled insulated roof panel which can be used for building applications with roof pitches of 4° or more after deflection.

Available Lengths

Standard Lengths	1.8 – 14.5m
Longer Lengths (non-standard)	14.5 – 29.3m
Shorter Lengths (non-standard)	Below 1.8m

Note: Additional costs and transport restrictions may apply for non-standard lengths. All lengths may change for export (outside of the UK).

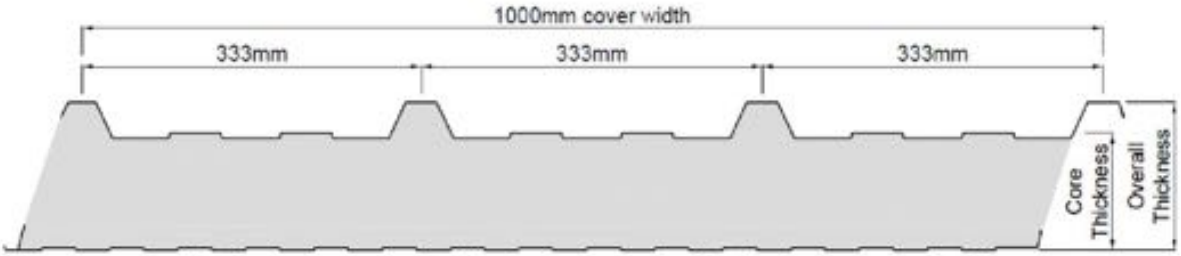

Dimensions, Weight & Thermal Performance

Core Thickness (mm)	40	53	60	73	80	91	100	115	120	137	150
Overall Thickness (mm)	71	84	91	104	111	122	131	146	151	168	181
U-value (W/m²K)	0.47	0.35	0.31	0.25	0.23	0.20	0.18	0.16	0.15	0.13	0.12
Weight kg/m² 0.5/0.4 Steel	9.8	10.4	10.6	11.2	11.4	11.9	12.2	12.8	13.0	13.7	14.2
Weight kg/m² 0.7/0.5 Alum	5.5	6.0	6.3	6.8	7.1	7.6	7.9	8.5	8.7	9.4	9.9

The KS1000 RW insulated wall panels have a Thermal Transmittance (U value), calculated using the method required by the Building Regulations Part L2 (England & Wales) and Building Standards Section 6 (Scotland).

© copyright 2021 Yacoustics – All rights reserved

QuadCore™ RW Trapezoidal Roof Panel

Insulation Core
KS1000 RW insulated roof panels are manufactured with an HCFC, CFC and HFC free QuadCore insulation core.

Fire

Reaction to Fire

- Classified B-s1,d0 according to the European Reaction to Fire classification system (Euroclasses) BS EN 13501–1:2007+A1:2009 when tested on the internal liner. Please contact Technical Services for information relating to the external face
- BROOF (t4) to BS EN 13501-5:2016

Insurer Approvals

- LPS 1181 Part 1: Issue 1, series of fire growth tests for LPCB approval and is certified to LPS 1181 Grade EXT-B
- FM 4471 Class 1 panel roofs*
- FM 4880 Class 1 fire rating of building panels or interior finish materials, unlimited height
- FM 4882 Class 1 interior wall panels in smoke sensitive occupancies (pharmaceutical manufacturing & storage areas, and food preparation & storage areas or similar occupancies)

*1.5m maximum span only. Please contact Technical Services for more information.

LPS 1181 : Issue 1.2
Cert. No: 260f & 186f

Environmental
Kingspan Insulated Panels produced in the UK are certified to BES 6001 (Framework Standard for the Responsible Sourcing of Construction Products) 'Very Good'. Kingspan Insulated Panels directly contribute to BREEAM/LEED credits.

Air Leakage
An air leakage rate of $3m^3/hr/m^2$ at 50Pa or less can be achieved when using Kingspan insulated roof and wall panels.

Acoustic
Sound Reduction Index (SRI)

Hz*	63	125	250	500	1K	2K	4K	8K
SRI (dB)	20	18	20	24	20	29	39	47

* Frequency

The KS1000 RW insulated roof panel has a single figure weighted sound reduction Rw = 25dB.

Biological
Kingspan panels are normally immune to attack from mould, fungi, mildew and vermin. No urea formaldehyde is used in the construction, and the panels are not considered deleterious

Materials

Substrate

- Kingspan XL Forté, Kingspan Spectrum, Kingspan AQUA*safe*, Kingspan AQUA*safe55* and Kingspan CLEAN*safe*: Metallic protected steel to BS EN 10346:2015.thickness 0.5mm.
  CLEAN*safe* 15: Metallic protected steel to BS EN10346:2015.thickness 0.4mm
- Stainless Steel: Austenitic Grade 316 stainless steel to BS EN 10088: Part 2: 2014, thickness 0.4mm.
- Aluminium: Please contact Kingspan envirocare Technical Services.

Coatings - External Weather Sheet

- Kingspan XL Forté: Consists of a multi-layer organic coating, embossed with a traditional leather-grain finish.
- Kingspan Spectrum: Consists of a coated semi-gloss finish with slight granular effect.

Coatings - Internal Liner Sheet

- Kingspan CLEAN*safe* 15: The coating has been developed for use as the internal lining of insulated panels. Standard colour is "bright white" with an easily cleaned surface.
- Kingspan AQUA*safe*: The coating has been developed for use as the internal lining of insulated panels to suit high humidity internal environments.
- Kingspan AQUA*safe 55*: The coating has been developed for use as the internal lining of insulated panels to swimming pool internal environments.
- Kingspan CLEAN*safe 120*: The coating has been developed for use as the internal lining of insulated panels where a high level of cleanliness and hygiene is required, and the panels are to be cleaned down on a regular basis.
- Stainless Steel: The stainless steel liner has been developed for use as the internal lining of insulated panels in buildings with a very aggressive/corrosive internal environment.

© copyright 2021 Yacoustics – All rights reserved

QuadCore™ RW Trapezoidal Roof Panel

Panel End Cut Back

Standard Cut Back Eaves	75mm
Standard Cut Back Endlap	150mm
Class A Endlap	75mm
Minimum Cut Back	20mm
Maximum Cut Back	300mm

Product Tolerance

Cut to Length	-5mm +5mm
Cover Width	-2mm +2mm
Thickness	-2mm +2mm
End Square	-3mm +3mm

Handing
The KS1000 RW insulated roof panel can be manufactured in both left to right handed (LH) and right to left handed (RH).

Seals
Factory applied side & end lap weather seals.

Quality & Durability
KS1000 RW insulated roof panels are manufactured from the highest quality materials, using state of the art production equipment to rigorous quality control standards, complying with BS EN ISO 9001 standard, ensuring long term reliability and service life. The panels are also being manufactured under Environmental Management System Certification BS EN ISO 14001. Compliant to BS OHSAS 18001 Occupational Health and Safety. The KS1000RW roof panels are CE marked to BS EN 14509: 2013.

Guarantee
Kingspan Total Panel Guarantee covering the structural and thermal performance for a period of up to 40 years and Kingspan Coating Guarantee for a period of up to 40 years (subject to project specific information).

Packing
KS1000 RW insulated roof panels are stacked weather sheet to weather sheet (to minimise pack height). The top, bottom, sides and ends are protected with foam and timber packing and the entire pack is wrapped in plastic.

Core Thickness (mm)	40	53	60	73-80	91	100 - 120	137 - 150
No. of panels in Pack	17	15	13	11	9	7	6

Note: Applies to UK pack sizes. Please contact Kingspan Technical Services for export information.

Sea Freight
Fully timber crated packs are available on projects requiring delivery by sea freight shipping, at additional costs. Alternatively, steel containers can be used. Special loading charges apply.

Delivery
All deliveries (unless indicated otherwise) are by road transport to project site. Off-loading is the responsibility of the client.

Site Installation Procedure
Site assembly instructions are available from Kingspan Technical Services.

© copyright 2021 Yacoustics – All rights reserved

QuadCore™ RW Trapezoidal Roof Panel

Structural Tables

Single Span

Core Thickness (mm)	Load Type	Uniformly distributed imposed load, kN/m² Span, m									
		1.4	1.6	1.8	2.0	2.2	2.4	2.6	2.8	3.0	3.2
40	Pressure	3.24	2.68	2.26	1.93	1.50	1.17	0.91	0.71	0.56	-
	Suction	4.34	3.63	3.09	2.67	2.33	1.92	1.57	1.30	1.09	-
53	Pressure	3.86	3.27	2.80	2.43	2.04	1.63	1.31	1.06	0.86	0.69
	Suction	5.23	4.46	3.87	3.39	2.99	2.58	2.15	1.80	1.53	1.31
60	Pressure	4.21	3.60	3.11	2.71	2.34	1.89	1.54	1.26	1.03	0.85
	Suction	5.72	4.92	4.29	3.78	3.35	2.85	2.41	2.07	1.78	1.53
73	Pressure	4.85	4.19	3.67	3.23	2.87	2.38	1.97	1.64	1.37	1.15
	Suction	6.65	5.80	5.12	4.55	3.88	3.23	2.73	2.34	2.04	1.79
80	Pressure	5.19	4.52	3.98	3.52	3.13	2.67	2.22	1.86	1.56	1.32
	Suction	7.15	6.27	5.56	4.96	4.12	3.43	2.90	2.49	2.16	1.90
91	Pressure	5.69	5.00	4.43	3.94	3.53	3.11	2.62	2.22	1.88	1.60
	Suction	7.94	7.03	6.27	5.43	4.43	3.69	3.12	2.68	2.33	2.05
100	Pressure	6.14	5.42	4.83	4.32	3.87	3.49	2.96	2.52	2.15	1.85
	Suction	8.60	7.65	6.81	5.84	4.77	3.97	3.37	2.89	2.52	2.21
115	Pressure	6.86	6.11	5.48	4.93	4.44	4.01	3.52	3.03	2.61	2.26
	Suction	9.61	8.42	7.49	6.36	5.20	4.34	3.68	3.17	2.75	2.42
120	Pressure	7.09	6.33	5.68	5.12	4.62	4.18	3.71	3.20	2.77	2.40
	Suction	9.61	8.42	7.49	6.59	5.39	4.50	3.82	3.28	2.86	2.51
137	Pressure	7.87	7.08	6.39	5.78	5.24	4.76	4.32	3.80	3.31	2.90
	Suction	9.61	8.42	7.50	6.76	5.86	4.90	4.16	3.58	3.11	2.74
150	Pressure	8.47	7.64	6.93	6.29	5.71	5.19	4.73	4.27	3.74	3.29
	Suction	9.62	8.43	7.50	6.76	6.15	5.20	4.41	3.80	3.31	2.91

Double Span

Core Thickness (mm)	Load Type	Uniformly distributed imposed load, kN/m² Span, m									
		1.4	1.6	1.8	2.0	2.2	2.4	2.6	2.8	3.0	3.2
40											
	Pressure	3.24	2.68	2.24	1.85	1.56	1.34	1.16	1.02	0.90	0.80
	Suction	4.07	3.27	2.71	2.29	1.98	1.74	1.54	1.38	1.25	1.14
53	Pressure	3.81	3.02	2.46	2.05	1.74	1.50	1.30	1.15	1.02	0.91
	Suction	4.24	3.43	2.86	2.43	2.11	1.86	1.66	1.49	1.35	1.24
60	Pressure	3.97	3.15	2.58	2.15	1.83	1.58	1.38	1.22	1.08	0.97
	Suction	4.32	3.50	2.92	2.50	2.17	1.91	1.71	1.54	1.40	1.28
73	Pressure	4.23	3.38	2.77	2.33	1.99	1.72	1.50	1.33	1.18	1.06
	Suction	4.45	3.63	3.04	2.61	2.27	2.01	1.80	1.63	1.48	1.36
80	Pressure	4.38	3.51	2.88	2.42	2.07	1.79	1.57	1.39	1.24	1.11
	Suction	4.50	3.68	3.09	2.65	2.32	2.05	1.84	1.66	1.52	1.39
91	Pressure	4.60	3.70	3.05	2.57	2.20	1.91	1.68	1.49	1.33	1.19
	Suction	4.47	3.67	3.09	2.66	2.32	2.06	1.85	1.68	1.53	1.41
100	Pressure	4.78	3.85	3.18	2.69	2.30	2.00	1.76	1.56	1.40	1.26
	Suction	4.60	3.78	3.19	2.75	2.41	2.14	1.92	1.74	1.59	1.46
115	Pressure	5.06	4.09	3.40	2.87	2.47	2.15	1.89	1.68	1.50	1.35
	Suction	4.65	3.83	3.24	2.80	2.46	2.18	1.96	1.78	1.63	1.50
120	Pressure	5.15	4.17	3.46	2.93	2.52	2.19	1.93	1.72	1.54	1.39
	Suction	4.64	3.83	3.25	2.80	2.46	2.19	1.97	1.79	1.63	1.51
137	Pressure	5.45	4.44	3.70	3.14	2.70	2.36	2.08	1.85	1.66	1.49
	Suction	4.65	3.85	3.27	2.83	2.48	2.21	1.99	1.81	1.66	1.53
150	Pressure	5.68	4.63	3.86	3.28	2.83	2.47	2.18	1.94	1.74	1.57
	Suction	4.63	3.84	3.26	2.82	2.48	2.21	1.99	1.81	1.66	1.53

1. Values have been calculated using the method described in BS EN 14509 2013, for medium coloured panels.
2. The following deflection limits have been used:
   a. Pressure loading L/200
   b. Suction loading L/150
3. All panel thicknesses have been calculated with a minimum support width of 50mm. Larger support widths are possible.
4. The actual wind suction resisted by the panel is dependent upon the number of fasteners and the material of the supporting element.
5. The fastener calculation should be carried out in accordance with the appropriate standards.
6. For intermediate values linear interpolation may be used.
7. The allowable steelwork tolerance between bearing planes of adjacent supports is +/- 5mm.

© copyright 2021 Yacoustics – All rights reserved

UK
Kingspan Limited
Greenfield Business Park No. 2,
Greenfield, Holywell, Flintshire,
North Wales, CH8 7GJ
T: +44 (0) 1352 716100
F: +44 (0) 1352 710161
www.kingspanpanels.co.uk

Ireland
Kingspan Limited
Carrickmacross Road
Kingscourt, Co. Cavan, A82 E897
T:+353 42 9698 540
www.kingspanpanels.ie

For the product offering in other markets
please contact your local sales representative
or visit www.kingspanpanels.com

Care has been taken to ensure that the contents of this publication are accurate, but Kingspan Limited and its subsidiary companies do not accept responsibility for errors or for information that is found to be misleading. Suggestions for, or description of, the end use of application of products or methods of working are for information only and Kingspan Limited and its subsidiaries accept no liability in respect thereof.

03/2020

© copyright 2021 Yacoustics – All rights reserved

ANNEX C – Environmental noise break-out (calculation details)

© copyright 2021 Yacoustics – All rights reserved

Area S (m2)	112.5	ID	ROOF 1
Cd (dB)	-6		
Dc (dB)	0		

Quantity	Octave band mid frequency in Hz						
	63	125	250	500	1 k	2 k	4 k
$L_{p,in}$	60	70	75	75	75	75	70
C_d	-6	-6	-6	-6	-6	-6	-6
R' (4-16-4 mm)	20	18	20	24	20	29	39
10 lg S/S_0	21	21	21	21	21	21	21
L_w	55	67	70	66	70	61	46
Dc	0	0	0	0	0	0	0
Source-receiver distance (m)	30						
A_{tot}	41	41	41	41	41	41	41
L_{pA}	-12	10	20	22	29	21	6
Sources	1						
L_{pA}	-12	10	20	22	29	21	6
L_{pA} Global	31						

Area S (m2)	112.5	ID	ROOF 2
Cd (dB)	-6		
Dc (dB)	0		

Quantity	Octave band mid frequency in Hz						
	63	125	250	500	1 k	2 k	4 k
$L_{p,in}$	60	70	75	75	75	75	70
C_d	-6	-6	-6	-6	-6	-6	-6
R' (4-16-4 mm)	20	18	20	24	20	29	39
10 lg S/S_0	21	21	21	21	21	21	21
L_w	55	67	70	66	70	61	46
Dc	0	0	0	0	0	0	0
Source-receiver distance (m)	38						
A_{tot}	43	43	43	43	43	43	43
L_{pA}	-14	8	18	20	27	19	4
Sources	1						
L_{pA}	-14	8	18	20	27	19	4
L_{pA} Global	29						

© copyright 2021 Yacoustics – All rights reserved

Area S (m2) 16.66 ID WINDOW 1
Cd (dB) -6
Dc (dB) 0

Quantity	Octave band mid frequency in Hz						
	63	125	250	500	1 k	2 k	4 k
$L_{p,in}$	60	70	75	75	75	75	70
C_d	-6	-6	-6	-6	-6	-6	-6
R' (4-16-4 mm)	17	21	17	25	35	37	31
10 lg S/S_0	12	12	12	12	12	12	12
L_w	49	55	64	56	46	44	45
Dc	0	0	0	0	0	0	0
Source-receiver distance (m)	28						
A_{tot}	40	40	40	40	40	40	40
L_{pA}	-17	-1	15	13	6	5	6
Sources	1						
L_{pA}	-17	-1	15	13	6	5	6
L_{pA} Global	18						

Area S (m2) 10.81 ID WINDOW 2
Cd (dB) -6
Dc (dB) -3

Quantity	Octave band mid frequency in Hz						
	63	125	250	500	1 k	2 k	4 k
$L_{p,in}$	60	70	75	75	75	75	70
C_d	-6	-6	-6	-6	-6	-6	-6
R' (4-16-4 mm)	0	0	0	0	0	0	0
10 lg S/S_0	10	10	10	10	10	10	10
L_w	64	74	79	79	79	79	74
Dc	-3	-3	-3	-3	-3	-3	-3
Source-receiver distance	35						
A_{tot}	42	42	42	42	42	42	42
L_{pA}	-7	13	25	31	34	35	30
Sources	1						
L_{pA}	-7	13	25	31	34	35	30
L_{pA} Global	40						

Area S (m2) 5.85 ID WINDOW 3
Cd (dB) -6
Dc (dB) 0

Quantity	Octave band mid frequency in Hz						
	63	125	250	500	1 k	2 k	4 k
$L_{p,in}$	60	70	75	75	75	75	70
C_d	-6	-6	-6	-6	-6	-6	-6
R' (4-16-4 mm)	0	0	0	0	0	0	0
10 lg S/S_0	8	8	8	8	8	8	8
L_w	62	72	77	77	77	77	72
Dc	0	0	0	0	0	0	0
Source-receiver distance	22						
A_{tot}	38	38	38	38	38	38	38
L_{pA}	-2	18	30	36	39	40	35
Sources	1						
L_{pA}	-2	18	30	36	39	40	35
L_{pA} Global	44						

© copyright 2021 Yacoustics – All rights reserved

Area S (m2) 16.66 ID WINDOW 1
Cd (dB) -6
Dc (dB) 0

Quantity	Octave band mid frequency in Hz						
	63	125	250	500	1 k	2 k	4 k
$L_{p,in}$	60	70	75	75	75	75	70
C_d	-6	-6	-6	-6	-6	-6	-6
R' (4-16-4 mm)	17	21	17	25	35	37	31
10 lg S/S_0	12	12	12	12	12	12	12
L_w	49	55	64	56	46	44	45
Dc	0	0	0	0	0	0	0
Source-receiver distance (m)	28						
A_{tot}	40	40	40	40	40	40	40
L_{pA}	-17	-1	15	13	6	5	6
Sources	1						
L_{pA}	-17	-1	15	13	6	5	6
L_{pA} Global	18						

Area S (m2) 10.81 ID WINDOW 2
Cd (dB) -6
Dc (dB) 0

Quantity	Octave band mid frequency in Hz						
	63	125	250	500	1 k	2 k	4 k
$L_{p,in}$	60	70	75	75	75	75	70
C_d	-6	-6	-6	-6	-6	-6	-6
R' (4-16-4 mm)	17	21	17	25	35	37	31
10 lg S/S_0	10	10	10	10	10	10	10
L_w	47	53	62	54	44	42	43
Dc	0	0	0	0	0	0	0
Source-receiver distance	35						
A_{tot}	42	42	42	42	42	42	42
L_{pA}	-21	-5	11	9	2	1	2
Sources	1						
L_{pA}	-21	-5	11	9	2	1	2
L_{pA} Global	14						

Area S (m2) 5.85 ID WINDOW 3
Cd (dB) -6
Dc (dB) 0

Quantity	Octave band mid frequency in Hz						
	63	125	250	500	1 k	2 k	4 k
$L_{p,in}$	60	70	75	75	75	75	70
C_d	-6	-6	-6	-6	-6	-6	-6
R' (4-16-4 mm)	17	21	17	25	35	37	31
10 lg S/S_0	8	8	8	8	8	8	8
L_w	45	51	60	52	42	40	41
Dc	0	0	0	0	0	0	0
Source-receiver distance	22						
A_{tot}	38	38	38	38	38	38	38
L_{pA}	-19	-3	13	11	4	3	4
Sources	1						
L_{pA}	-19	-3	13	11	4	3	4
L_{pA} Global	16						

© copyright 2021 Yacoustics – All rights reserved

Area S (m2) 4.84 ID WINDOW 4
Cd (dB) -6
Dc (dB) 0

Quantity	Octave band mid frequency in Hz						
	63	125	250	500	1 k	2 k	4 k
$L_{p,in}$	60	70	75	75	75	75	70
C_d	-6	-6	-6	-6	-6	-6	-6
R' (4-16-4 mm)	17	21	17	25	35	37	31
10 lg S/S_0	7	7	7	7	7	7	7
L_w	44	50	59	51	41	39	40
Dc	0	0	0	0	0	0	0
Source-receiver distance (m)	2						
A_{tot}	17	17	17	17	17	17	17
L_{pA}	1	17	33	31	24	23	24
Sources	1						
L_{pA}	1	17	33	31	24	23	24
L_{pA} Global	36						

Area S (m2) 4.84 ID WINDOW 5
Cd (dB) -6
Dc (dB) 0

Quantity	Octave band mid frequency in Hz						
	63	125	250	500	1 k	2 k	4 k
$L_{p,in}$	60	70	75	75	75	75	70
C_d	-6	-6	-6	-6	-6	-6	-6
R' (4-16-4 mm)	17	21	17	25	35	37	31
10 lg S/S_0	7	7	7	7	7	7	7
L_w	44	50	59	51	41	39	40
Dc	0	0	0	0	0	0	0
Source-receiver distance	4						
A_{tot}	23	23	23	23	23	23	23
L_{pA}	-5	11	27	25	18	17	18
Sources	1						
L_{pA}	-5	11	27	25	18	17	18
L_{pA} Global	30						

© copyright 2021 Yacoustics – All rights reserved

Area S (m2)	112.5	ID	ROOF 1
Cd (dB)	-6		
Dc (dB)	0		

Quantity	Octave band mid frequency in Hz						
	63	125	250	500	1 k	2 k	4 k
$L_{p,in}$	60	70	75	75	75	75	70
C_d	-6	-6	-6	-6	-6	-6	-6
R' (4-16-4 mm)	20	18	20	24	20	29	39
10 lg S/S_0	21	21	21	21	21	21	21
L_w	55	67	70	66	70	61	46
Dc	0	0	0	0	0	0	0
Source-receiver distance (m)	4						
A_{tot}	23	23	23	23	23	23	23
L_{pA}	5	27	37	39	46	38	23
Sources	1						
L_{pA}	5	27	37	39	46	38	23
L_{pA} Global	48						

Area S (m2)	112.5	ID	ROOF 2
Cd (dB)	-6		
Dc (dB)	0		

Quantity	Octave band mid frequency in Hz						
	63	125	250	500	1 k	2 k	4 k
$L_{p,in}$	60	70	75	75	75	75	70
C_d	-6	-6	-6	-6	-6	-6	-6
R' (4-16-4 mm)	20	18	20	24	20	29	39
10 lg S/S_0	21	21	21	21	21	21	21
L_w	55	67	70	66	70	61	46
Dc	0	0	0	0	0	0	0
Source-receiver distance (m)	4						
A_{tot}	23	23	23	23	23	23	23
L_{pA}	5	27	37	39	46	38	23
Sources	1						
L_{pA}	5	27	37	39	46	38	23
L_{pA} Global	48						

© copyright 2021 Yacoustics – All rights reserved

Area S (m2) 16.66 ID WINDOW 1
Cd (dB) -6
Dc (dB) 0

Quantity	Octave band mid frequency in Hz						
	63	125	250	500	1 k	2 k	4 k
$L_{p,in}$	60	70	75	75	75	75	70
C_d	-6	-6	-6	-6	-6	-6	-6
R' (4-16-4 mm)	17	21	17	25	35	37	31
10 lg S/S_0	12	12	12	12	12	12	12
L_w	49	55	64	56	46	44	45
Dc	0	0	0	0	0	0	0
Source-receiver distance (m)	23						
A_{tot}	38	38	38	38	38	38	38
L_{pA}	-15	1	17	15	8	7	8
Sources	1						
L_{pA}	-15	1	17	15	8	7	8
L_{pA} Global	20						

Area S (m2) 10.81 ID WINDOW 2
Cd (dB) -6
Dc (dB) -3

Quantity	Octave band mid frequency in Hz						
	63	125	250	500	1 k	2 k	4 k
$L_{p,in}$	60	70	75	75	75	75	70
C_d	-6	-6	-6	-6	-6	-6	-6
R' (4-16-4 mm)	17	21	17	25	35	37	31
10 lg S/S_0	10	10	10	10	10	10	10
L_w	47	53	62	54	44	42	43
Dc	-3	-3	-3	-3	-3	-3	-3
Source-receiver distance	12						
A_{tot}	33	33	33	33	33	33	33
L_{pA}	-14	2	18	16	9	8	9
Sources	1						
L_{pA}	-14	2	18	16	9	8	9
L_{pA} Global	21						

Area S (m2) 5.85 ID WINDOW 3
Cd (dB) -6
Dc (dB) 0

Quantity	Octave band mid frequency in Hz						
	63	125	250	500	1 k	2 k	4 k
$L_{p,in}$	60	70	75	75	75	75	70
C_d	-6	-6	-6	-6	-6	-6	-6
R' (4-16-4 mm)	17	21	17	25	35	37	31
10 lg S/S_0	8	8	8	8	8	8	8
L_w	45	51	60	52	42	40	41
Dc	0	0	0	0	0	0	0
Source-receiver distance	32						
A_{tot}	41	41	41	41	41	41	41
L_{pA}	-22	-6	10	8	1	0	1
Sources	1						
L_{pA}	-22	-6	10	8	1	0	1
L_{pA} Global	13						

© copyright 2021 Yacoustics – All rights reserved

Area S (m2) 16.66 ID WINDOW 1
Cd (dB) -6
Dc (dB) 0

Quantity	Octave band mid frequency in Hz						
	63	125	250	500	1 k	2 k	4 k
$L_{p,in}$	60	70	75	75	75	75	70
C_d	-6	-6	-6	-6	-6	-6	-6
R' (4-16-4 mm)	17	21	17	25	35	37	31
10 lg S/S_0	12	12	12	12	12	12	12
L_w	49	55	64	56	46	44	45
Dc	0	0	0	0	0	0	0
Source-receiver distance (m)	23						
A_{tot}	38	38	38	38	38	38	38
L_{pA}	-15	1	17	15	8	7	8
Sources	1						
L_{pA}	-15	1	17	15	8	7	8
L_{pA} Global	20						

Area S (m2) 10.81 ID WINDOW 2
Cd (dB) -6
Dc (dB) -3

Quantity	Octave band mid frequency in Hz						
	63	125	250	500	1 k	2 k	4 k
$L_{p,in}$	60	70	75	75	75	75	70
C_d	-6	-6	-6	-6	-6	-6	-6
R' (4-16-4 mm)	0	0	0	0	0	0	0
10 lg S/S_0	10	10	10	10	10	10	10
L_w	64	74	79	79	79	79	74
Dc	-3	-3	-3	-3	-3	-3	-3
Source-receiver distance	12						
A_{tot}	33	33	33	33	33	33	33
L_{pA}	3	23	35	41	44	45	40
Sources	1						
L_{pA}	3	23	35	41	44	45	40
L_{pA} Global	49						

Area S (m2) 5.85 ID WINDOW 3
Cd (dB) -6
Dc (dB) 0

Quantity	Octave band mid frequency in Hz						
	63	125	250	500	1 k	2 k	4 k
$L_{p,in}$	60	70	75	75	75	75	70
C_d	-6	-6	-6	-6	-6	-6	-6
R' (4-16-4 mm)	0	0	0	0	0	0	0
10 lg S/S_0	8	8	8	8	8	8	8
L_w	62	72	77	77	77	77	72
Dc	0	0	0	0	0	0	0
Source-receiver distance	32						
A_{tot}	41	41	41	41	41	41	41
L_{pA}	-5	15	27	33	36	37	32
Sources	1						
L_{pA}	-5	15	27	33	36	37	32
L_{pA} Global	41						

© copyright 2021 Yacoustics – All rights reserved

Area S (m2)	112.5	ID	ROOF 1
Cd (dB)	-6		
Dc (dB)	0		

Quantity	Octave band mid frequency in Hz						
	63	125	250	500	1 k	2 k	4 k
$L_{p,in}$	60	70	75	75	75	75	70
C_d	-6	-6	-6	-6	-6	-6	-6
R' (4-16-4 mm)	20	18	20	24	20	29	39
10 lg S/S_0	21	21	21	21	21	21	21
L_w	55	67	70	66	70	61	46
Dc	0	0	0	0	0	0	0
Source-receiver distance (m)	12						
A_{tot}	33	33	33	33	33	33	33
L_{pA}	-4	18	28	30	37	29	14
Sources	1						
L_{pA}	-4	18	28	30	37	29	14
L_{pA} Global	39						

Area S (m2)	112.5	ID	ROOF 2
Cd (dB)	-6		
Dc (dB)	0		

Quantity	Octave band mid frequency in Hz						
	63	125	250	500	1 k	2 k	4 k
$L_{p,in}$	60	70	75	75	75	75	70
C_d	-6	-6	-6	-6	-6	-6	-6
R' (4-16-4 mm)	20	18	20	24	20	29	39
10 lg S/S_0	21	21	21	21	21	21	21
L_w	55	67	70	66	70	61	46
Dc	0	0	0	0	0	0	0
Source-receiver distance (m)	23						
A_{tot}	38	38	38	38	38	38	38
L_{pA}	-10	12	22	24	31	23	8
Sources	1						
L_{pA}	-10	12	22	24	31	23	8
L_{pA} Global	33						

© copyright 2021 Yacoustics – All rights reserved

Area S (m2) 16.66 ID WINDOW 1
Cd (dB) -6
Dc (dB) 0

Quantity	Octave band mid frequency in Hz						
	63	125	250	500	1 k	2 k	4 k
$L_{p,in}$	60	70	75	75	75	75	70
C_d	-6	-6	-6	-6	-6	-6	-6
R' (4-16-4 mm)	17	21	17	25	35	37	31
10 lg S/S_0	12	12	12	12	12	12	12
L_w	49	55	64	56	46	44	45
Dc	0	0	0	0	0	0	0
Source-receiver distance (m)	12						
A_{tot}	33	33	33	33	33	33	33
L_{pA}	-9	7	23	21	14	13	14
Sources	1						
L_{pA}	-9	7	23	21	14	13	14
L_{pA} Global	26						

Area S (m2) 10.81 ID WINDOW 2
Cd (dB) -6
Dc (dB) -3

Quantity	Octave band mid frequency in Hz						
	63	125	250	500	1 k	2 k	4 k
$L_{p,in}$	60	70	75	75	75	75	70
C_d	-6	-6	-6	-6	-6	-6	-6
R' (4-16-4 mm)	17	21	17	25	35	37	31
10 lg S/S_0	10	10	10	10	10	10	10
L_w	47	53	62	54	44	42	43
Dc	-3	-3	-3	-3	-3	-3	-3
Source-receiver distance	12						
A_{tot}	33	33	33	33	33	33	33
L_{pA}	-14	2	18	16	9	8	9
Sources	1						
L_{pA}	-14	2	18	16	9	8	9
L_{pA} Global	21						

Area S (m2) 5.85 ID WINDOW 3
Cd (dB) -6
Dc (dB) 0

Quantity	Octave band mid frequency in Hz						
	63	125	250	500	1 k	2 k	4 k
$L_{p,in}$	60	70	75	75	75	75	70
C_d	-6	-6	-6	-6	-6	-6	-6
R' (4-16-4 mm)	17	21	17	25	35	37	31
10 lg S/S_0	8	8	8	8	8	8	8
L_w	45	51	60	52	42	40	41
Dc	0	0	0	0	0	0	0
Source-receiver distance	20						
A_{tot}	37	37	37	37	37	37	37
L_{pA}	-18	-2	14	12	5	4	5
Sources	1						
L_{pA}	-18	-2	14	12	5	4	5
L_{pA} Global	17						

© copyright 2021 Yacoustics – All rights reserved

Area S (m2) 16.66 ID WINDOW 1
Cd (dB) -6
Dc (dB) 0

Quantity	Octave band mid frequency in Hz						
	63	125	250	500	1 k	2 k	4 k
$L_{p,in}$	60	70	75	75	75	75	70
C_d	-6	-6	-6	-6	-6	-6	-6
R' (4-16-4 mm)	17	21	17	25	35	37	31
10 lg S/S_0	12	12	12	12	12	12	12
L_w	49	55	64	56	46	44	45
Dc	0	0	0	0	0	0	0
Source-receiver distance (m)	12						
A_{tot}	33	33	33	33	33	33	33
L_{pA}	-9	7	23	21	14	13	14
Sources	1						
L_{pA}	-9	7	23	21	14	13	14
L_{pA} Global	26						

Area S (m2) 10.811 ID WINDOW 2
Cd (dB) -6
Dc (dB) -3

Quantity	Octave band mid frequency in Hz						
	63	125	250	500	1 k	2 k	4 k
$L_{p,in}$	60	70	75	75	75	75	70
C_d	-6	-6	-6	-6	-6	-6	-6
R' (4-16-4 mm)	0	0	0	0	0	0	0
10 lg S/S_0	10	10	10	10	10	10	10
L_w	64	74	79	79	79	79	74
Dc	-3	-3	-3	-3	-3	-3	-3
Source-receiver distance	12						
A_{tot}	33	33	33	33	33	33	33
L_{pA}	3	23	35	41	44	45	40
Sources	1						
L_{pA}	3	23	35	41	44	45	40
L_{pA} Global	49						

Area S (m2) 5.85 ID WINDOW 3
Cd (dB) -6
Dc (dB) 0

Quantity	Octave band mid frequency in Hz						
	63	125	250	500	1 k	2 k	4 k
$L_{p,in}$	60	70	75	75	75	75	70
C_d	-6	-6	-6	-6	-6	-6	-6
R' (4-16-4 mm)	0	0	0	0	0	0	0
10 lg S/S_0	8	8	8	8	8	8	8
L_w	62	72	77	77	77	77	72
Dc	0	0	0	0	0	0	0
Source-receiver distance	20						
A_{tot}	37	37	37	37	37	37	37
L_{pA}	-1	19	31	37	40	41	36
Sources	1						
L_{pA}	-1	19	31	37	40	41	36
L_{pA} Global	45						

© copyright 2021 Yacoustics – All rights reserved

ANNEX D – Noise transfer (calculation details)

© copyright 2021 Yacoustics – All rights reserved

S -	area of partition in m^2	15
V -	volume of the receiving room	36
	NR -	30
	dB -	59
	dB (A) -	39

	TR	A
63	0.5	12
125	0.5	12
250	0.5	12
500	0.5	12
1000	0.5	12
2000	0.5	12
4000	0.5	12

Fz (Hz)	SPL_1	SPL_2	$10*\log_{10}(S)$	$10*\log_{10}(A)$	R'	proposed wall	R' (adopted solution)	SPL_2	SPL_2 dB(A)
63	60	59	12	11	2	29	24	37	11
125	70	48	12	11	23	47	42	29	13
250	75	40	12	11	36	54	49	27	19
500	75	34	12	11	42	58	53	23	20
1000	75	30	12	11	46	65	60	16	16
2000	75	27	12	11	49	69	64	12	13
4000	70	25	12	11	46	86	81	-10	-9

Total	82	59	38	24

© copyright 2021 Yacoustics – All rights reserved

S -	area of partition in m^2	15
V -	volume of the receiving room	36
	NR -	30
	dB -	59
	dB (A) -	39

	TR	A
63	0.5	12
125	0.5	12
250	0.5	12
500	0.5	12
1000	0.5	12
2000	0.5	12
4000	0.5	12

Fz (Hz)	SPL_1	SPL_2	$10*\log_{10}(S)$	$10*\log_{10}(A)$	R'	proposed door/wal	R' (adopted solution)	SPL_2	SPL_2 dB(A)
63	60	59	12	11	2	32	27	34	8
125	70	48	12	11	23	48	43	28	12
250	75	40	12	11	36	59	54	22	14
500	75	34	12	11	42	69	64	12	9
1000	75	30	12	11	46	76	71	5	5
2000	75	27	12	11	49	68	63	13	14
4000	70	25	12	11	46	76	71	0	1

Total	82	59	35	19

© copyright 2021 Yacoustics – All rights reserved

ANNEX E – Extraction and air input fans (details)

© copyright 2021 Yacoustics – All rights reserved

Extraction Layout

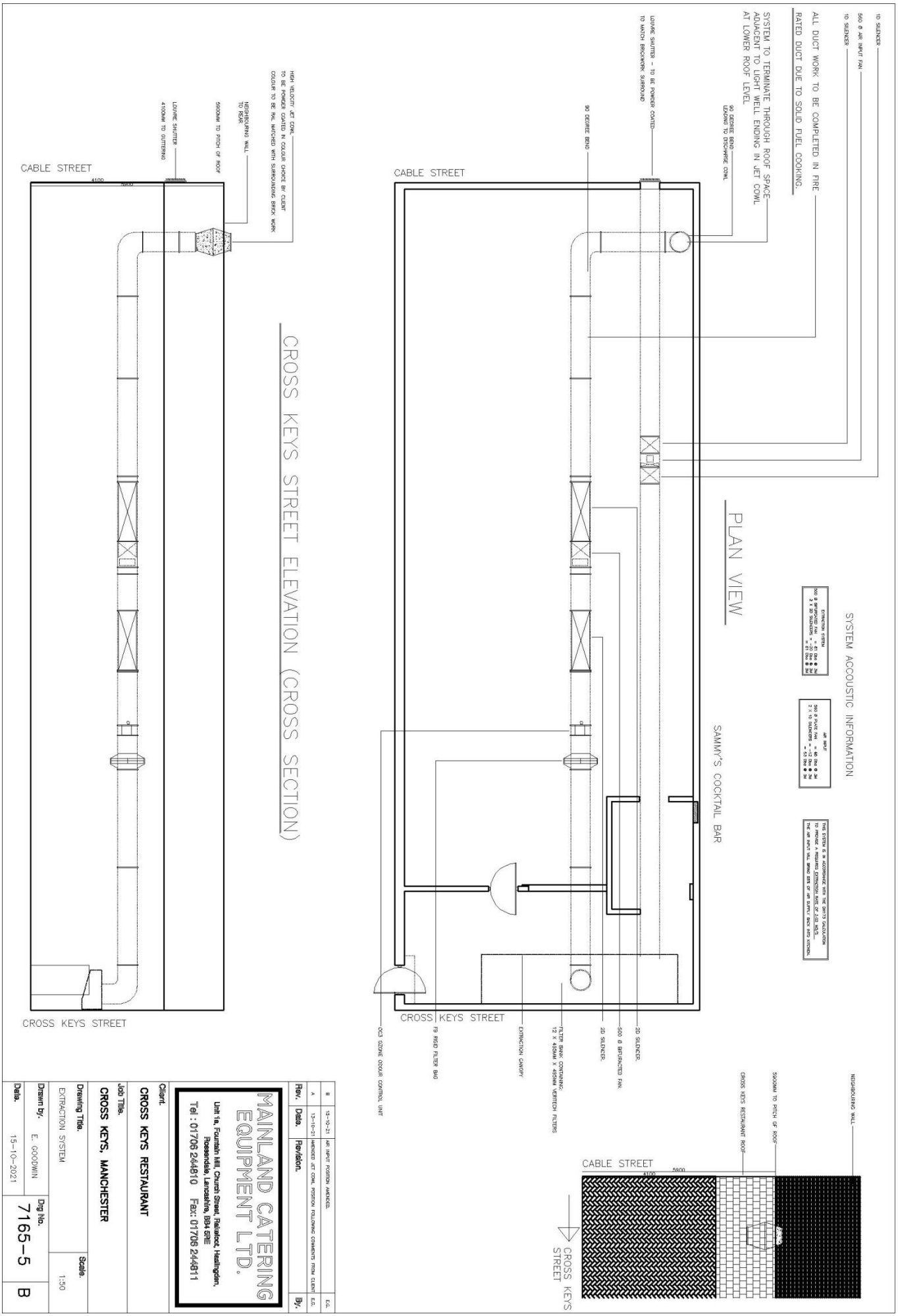

© copyright 2021 Yacoustics – All rights reserved

Extraction Elevation

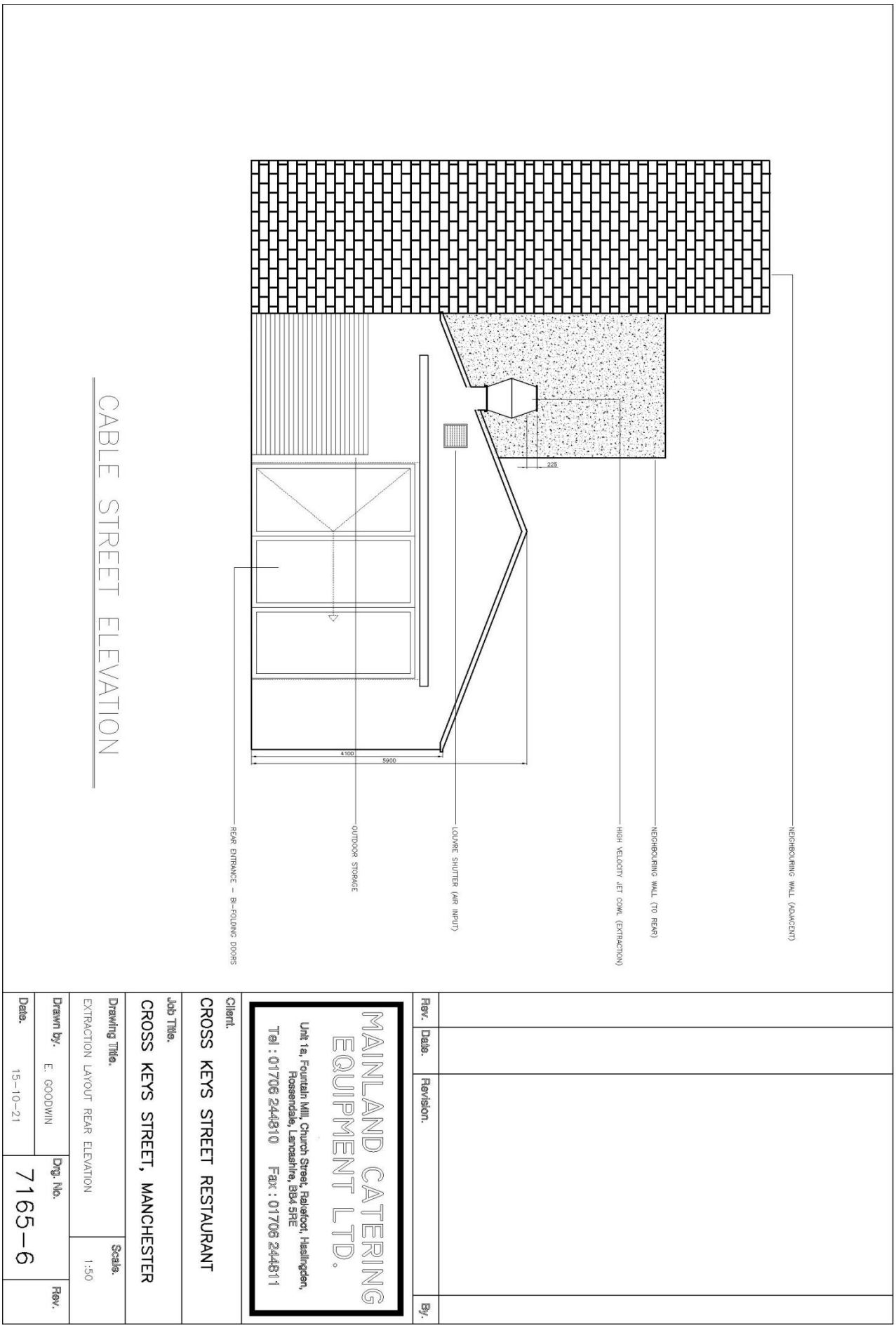

© *copyright* 2021 Yacoustics – All rights reserved

Kitchen Layout

1. ICE MAKER.
2. OVAL BOWL SINK UNIT.
3. UNDERCOUNTER GLASSWASHER.
4. STORAGE RACK.
5. WASH HAND BASIN.
6. INSECT KILLER.
7. STORAGE RACK.
8. SINGLE BOWL SINK UNIT.
9. WALL SHELF.
10. WALL BENCH.
11. UNDERCOUNTER REFRIGERATOR.
12. WALL SHELF.
13. FOUR RING INDUCTION TOP.
14. CHARGRILL.
15. FRYER.
16. SMOKER.
17. INFILL BENCH.
18. UNDRCOUNTER FREEZER.
19. WALL BENCH.
20. UNDERCOUNTER REFRIGERATOR.
21. BARBECUE.
22. WASH HAND BASIN.
23. WALL SHELF.
24. INSECT KILLER.
25. STORAGE RACK.
26. STORAGE RACK.
27. UPRIGHT FREEZER.
28. UPRIGHT REFRIGERATOR.
29. THREE DOOR COUNTER REFRIGERATOR.
30. HEATED GANTRY.
31. WALL BENCH.
32. DISHWASH EXIT TABLE.
33. PASS THROUGH DISHWASHER.
34. DISHWASH DIRTIES TABLE.
35. EXTRACTION CANOPY.
36. AIR INPUT – NOT SHOWN.
37. WALL CLADDING – NOT SHOWN.

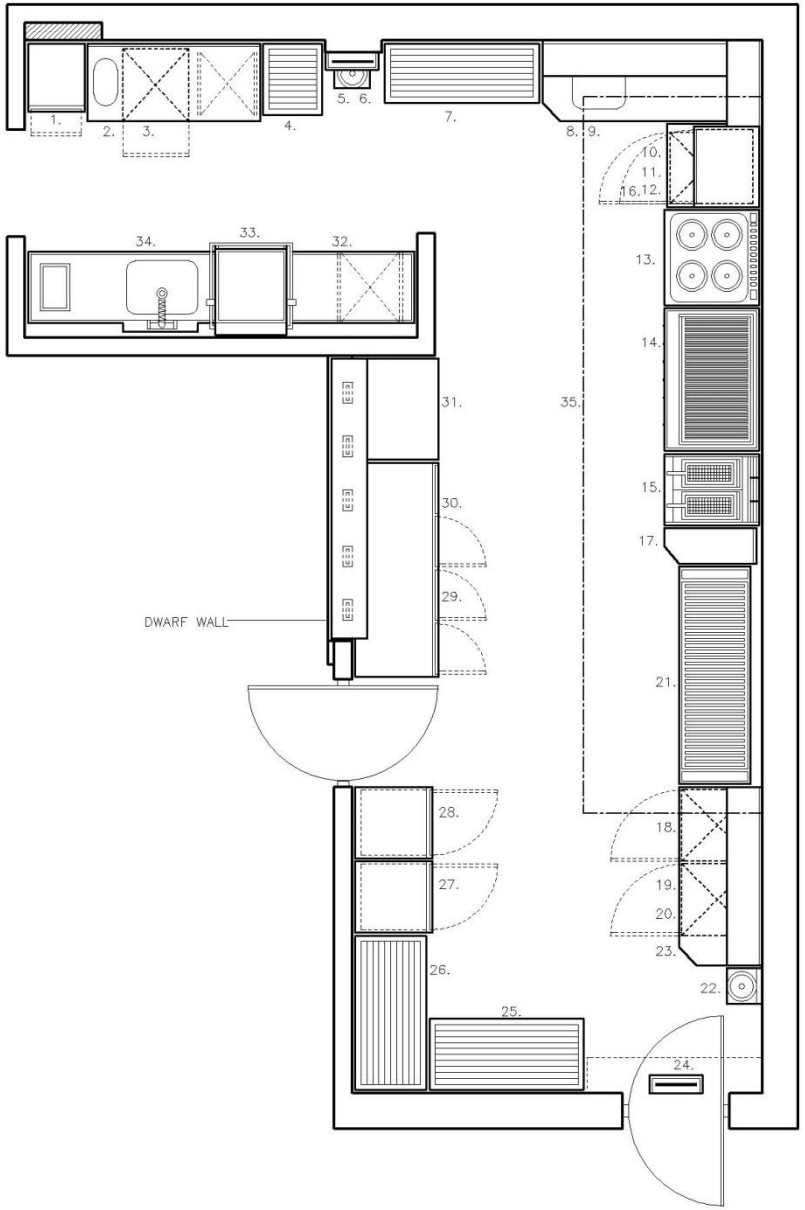

Rev.	Date.	Revision.	By.
A	06-10-2021	LAYOUT AMENDED TO ACCOMODATE CLIENTS EQUIPMENT CHOICES.	E.G.

MAINLAND CATERING EQUIPMENT LTD.

Unit 1a, Fountain Mill, Church Street, Rakefoot, Haslingden, Rossendale, Lancashire, BB4 5RE
Tel : 01706 244810 Fax: 01706 244811

Client. CHRIS & RACHAEL FORD-MACKENZIE

Job Title. CROSS KEYS, MANCHESTER

Drawing Title. LAYOUT OF CATERING FACILITIES

Scale. 1:20

Drawn by. E. GOODWIN

Date. 06-10-2021

Drg. No. 7165-4

Rev. A

© copyright 2021 Yacoustics – All rights reserved

Interlock specification

THE MERLIN RANGE
MERLIN CT1750 SYSTEM

The Merlin CT1750 System is an air quality control system.

This panel acts an interlock between the ventilation and the gas solenoid valve and also controls the fan speed via 0-10v DC output.

The 1750 also monitors carbon dioxide and carbon monoxide levels in the kitchen.

The system is compatible with both current monitors and air pressure differential switches and can interlock with up to 2 fans.

The 1750 can also incorporates gas proving for when the gas appliances do not have flame failure devices.

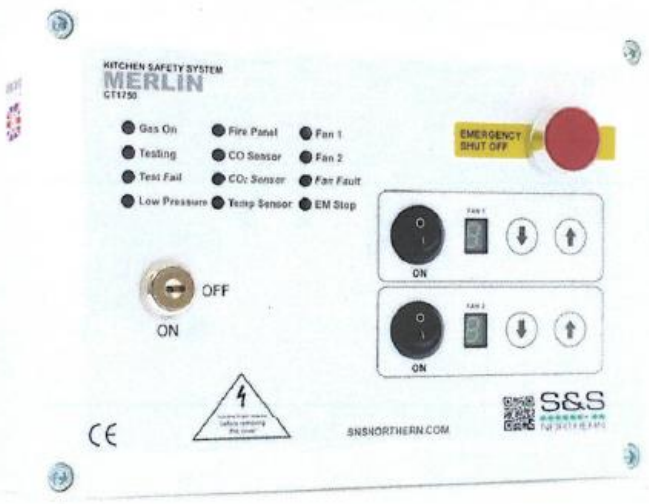

Key Features of the Merlin CT1750 System

- Complies with BS6173
- Carbon monoxide and Dioxide monitoring
- Allows manual fan speed control (via 0-10v dc output)
- Clear LED display for system indications
- ideal safety backup for solid fuel appliances
- Interlocking with fans using either Air PD Switches or Fan Current Sensors.
- Automatically increases the speed of the fans if used with CO2 and CO detectors, if detectors go into alarm , even if the panel is switched to the "off" position.
- Optional gas proving facility
- Easy Installation
- *Will accept remote emergency knock-off buttons*
- Can link to fire alarm or BMS systems
- Covered by S&S Northern Ltd 3 year warranty.

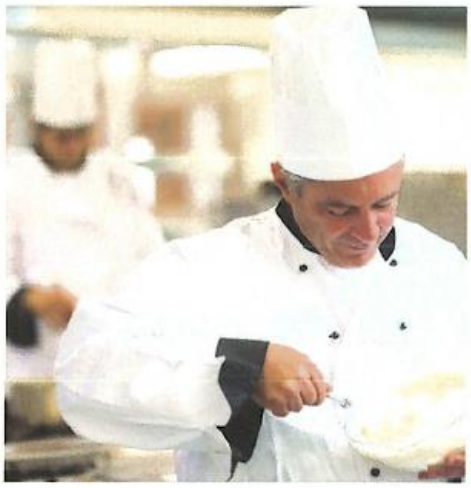

© copyright 2021 Yacoustics – All rights reserved

KITCHEN EQUIPMENT
ENGINEERED TO MEET BS6173

The Merlin CT1750 System has two built in 0-10V dc outputs, this is designed to control fan controllers which will in turn increase the speed of a fans should any Carbon Dioxide or Carbon Monoxide detector that is connected to the panel goes into an alarm condition. The fans can also be controlled manually from the panel using the up & down buttons located on the panel fascia.

The Merlin 1750 has the facility for connection of a Merlin Carbon Dioxide detector. Should the CO2 detector go into an alarm condition a signal will be sent to the 1750 panel, the CO2 LED on the panel will light and the gas solenoid valve will close. The 1750 will automatically increase the fans to reduce the CO2 levels. The gas supply can not be reinstated until the CO2 has reduced to an acceptable level.

If a gas solenoid valve is closed in a commercial kitchen that is fitted with standard gas ovens and grills the gas appliances will no longer give off dangerous gases such as Carbon Monoxide. However where solid fuel appliances such as charcoal ovens and grilles are installed there is a possibility that the coals will continue to smoulder and therefore produce harmful Carbon Monoxide even when the appliance is no longer being used.

If the detectors alarm due to higher than normal levels of gases being present in the kitchen, the fans will be instantly boosted to full speed, even if the Merlin CT1750 System is turned in the "off" position. Once the gases have been cleared, the fans will be shut down, ensuring the kitchen doesn't incur any unnecessary running costs.

If the detectors go into an alarm condition during normal working conditions the fans will be boosted to maximum speed, the relevant "gas sensor" LED on the panel fascia will illuminate and the gas solenoid valve will automatically close. The gas valve cannot be reinstated until the gas has cleared.

Ventilation/gas Interlock ensures the gas solenoid valve cannot be opened until any fans connected to the panel are operating. If at any time the fan fails a signal will be sent to close any gas solenoid valve that is connected to the panel, the "fan fault" LED relating to the fan that has failed will flash and the gas solenoid valve will close.

The gas pressure proving can be used using our gas pressure transducer fixed into the downstream port of the gas solenoid valve. If the Merlin CT1750 is fitted with a gas pressure transducer and detects there is a drop in gas pressure , or a gas leak, within the 30 second start-up period, the gas solenoid valve will not be allowed to open and the panel will show "test fail". If the gas line is found to be sound during the 30 second test period the panel will go to "Gas on" and the gas solenoid valve will open. If the incoming gas pressure drops below 12mb, for more than 10 seconds, the gas valve will shut and the "pressure low" LED will illuminate.

Merlin CT1750 Box Dimensions	
Height	***178mm***
Length	***254mm***
Depth	***62mm***

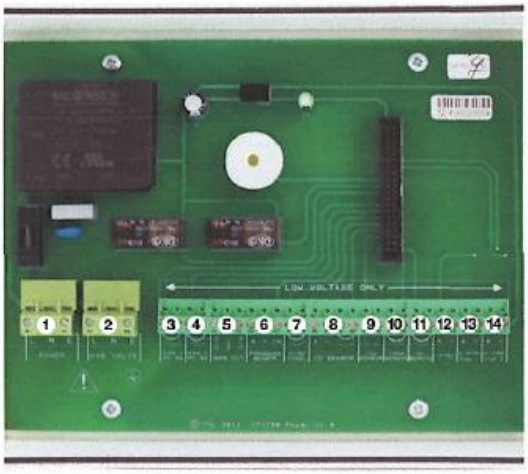

S&S Northern has a full technical team available on 01257 470 983 or if you are based in the South East please call 01702 291 725

Merlin CT1750 System Wiring Diagram

1. *230V AC power supply*
2. 230V AC output to gas valve (3A)
3. Fan 1 interlocking input – N/C when fan on, open when fan off (volt free)
4. Fan 2 interlocking input – As above
5. Terminal for BMS connections
6. Pressure transducer wired to terminal – (if pressure proving is req.)
7. Fire alarm connection – N/C, open in alarm condition (volt free)
8. CO (Carbon monoxide) terminal (+ & - is a 24VDC supply to power the sensor / N/C switch, open in alarm condition – Volt free)
9. CO2 (Carbon Dioxide) terminal - N/C switch, open in alarm condition (volt free)
10. For connecting a temperature duct sensor - N/C - open in alarm condition (volt free)
11. For connecting a remote knock off button - N/C switch, open in alarm condition (volt free)
12. 12VDC permanent output
13. Fan 1, 0-10V output (This voltage will be increased and decreased via the up/down switches located on the panel fascia. This enables us to regulate the fan speeds via an external speed controller which can accept this control signal)
14. Fan 2, 0-10V output (As above)

© copyright 2021 Yacoustics – All rights reserved

Northern Fan Supplies Ltd
Technical Data Sheet
JM Bifurcated 200 Deg C

NFAN

Quotation Number	:	Project Code	: BA-21396-2
Project Name	: Crosskeys - revision	Customer	: Mainland Catering
Item Reference:	: Extract Option 2	Date:	: Tuesday, October 12, 2021

Fan Code	50JM.BIF/20/2/6/22
Fan Diameter / Size	500 Size / mm
Blades	6
Fan Speed	2950 rpm
Velocity	15.5 m/s
Blade Angle	22°
Installation Type / Form of Running	D / B (Horizontal)
Fan Casing	Long
Requested Duty	3.03m³/s @ 557 Pa (static)
Outlet Dynamic Pressure	145 Pa
Duty Shaft Power	3.32 kW
Max Shaft Power	3.62 kW
Total Efficiency	65.2 %
Motor Frame	112M [Class F]
Motor Rating	4.00 kW [IE3]
Full Load Current	7.5 A
Starting Current	57.8 A
Motor Mounting	Flange
Electrical Supply	380-420 Volts 50 Hz 3 Phase
Start Type	Enquire
Motor Winding	Standard
Enclosure	Bifurcated TEFC
ErP [FMEG] Rating	Not in Scope
SFP value	1.22 W/(l/s) @ Requested Duty
Power from mains	3.72 kW
Energy Consumption	11150 kWh (3000 h/year)
Running Cost / Year	£1338
Air Density	1.2 kg/m³ / 20 °C / 0 m / 50% RH
Smoke Venting	Non Smoke Venting
Product Number	JN275011

Performance data has been derived from tests carried out in a Flakt Woods laboratory, in accordance with ISO 5801 and is specifically applicable for Ducted installations. When an electronic controller is incorporated, enhanced motor noise can occur - particularly when the operating speed is well below maximum. FWL therefore recommend using an auto transformer speed controller for noise sensitive applications. Bifurcateds are Erp exempt when used continuously at >100C. They are not for use in the EEA at lower temperatures.

Acoustic data has been derived from tests carried out in a Flakt Woods laboratory, in accordance with BS 848 Pt 2, 1985 / BS EN ISO 5136 under Ducted conditions. The single figure provided is the overall Inlet sound pressure level at the specified distance, under spherical, free field conditions.

Acoustic figures for adjusted running speeds have been interpolated and are for reference only.

This Offer is made subject to the latest version of our A100-19 Terms and Conditions, a copy of which can be made available on request.

	Sound Spectrum (Hz)								Overall	
	63	125	250	500	1k	2k	4k	8k	Lw*	LpA @ 3 m**
Inlet*	94	90	99	100	95	96	91	87	105	81
Outlet*	91	93	101	96	96	97	92	88	105	81

* Lw dB re 10^{-12} W ** dBA re $2x10^{-5}$ Pa

Sound data at requested duty.

Description	Qty
Fan	
JN275011 - 50JM.BIF/20/2/6/22	1
Accessories	

Unit E1 Logford Trading Estate
Thomas Street, Stretford, M320JT
Tel: 01618641777 Fax: 01618642777

Website: nfan.co.uk
Email: jon@nfan.co.uk
Copyright Fläkt Group 2003 - 2020

© copyright 2021 Yacoustics – All rights reserved

Northern Fan Supplies Ltd

Performance Chart

JM Bifurcated 200 Deg C

NFAN

Quotation Number	:	Project Code	: BA-21396-2
Project Name	: Crosskeys - revision	Customer	: Mainland Catering
Item Reference:	: Extract Option 2	Date:	: Tuesday, October 12, 2021
		Fan Code	: 50JM.BIF/20/2/6/22

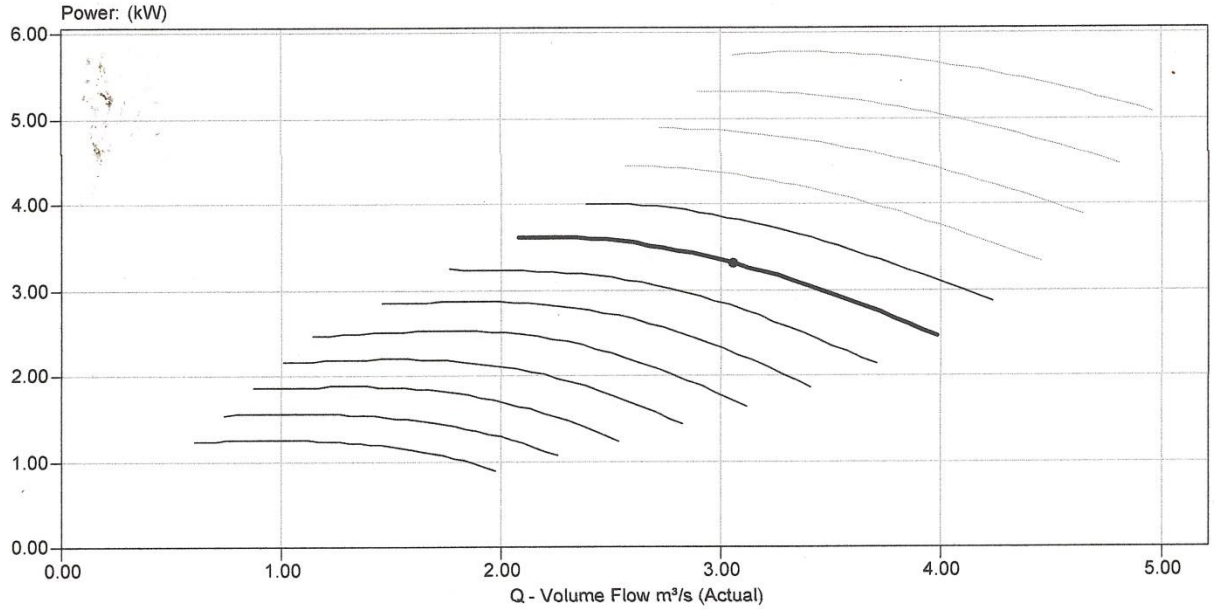

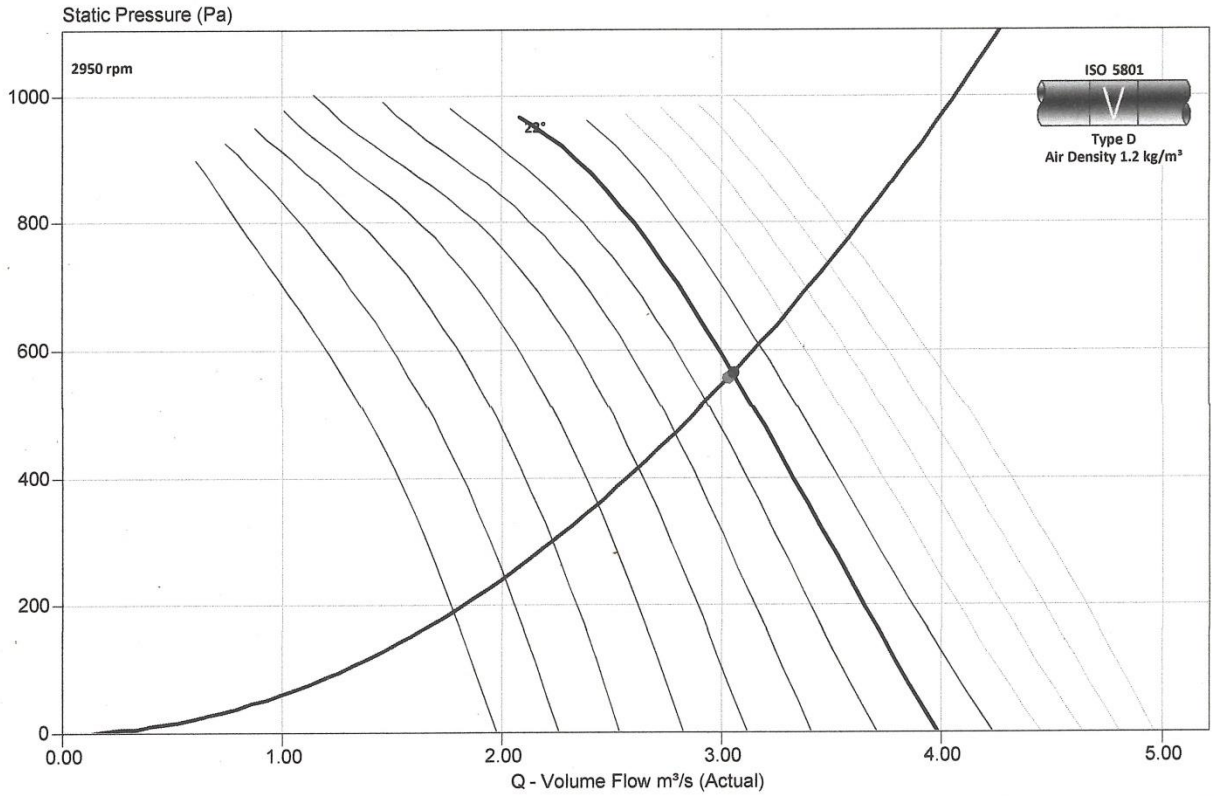

Unit E1 Logford Trading Estate
Thomas Street, Stretford, M320JT
Tel: 01618641777 Fax: 01618642777

Website: nfan.co.uk
Email: jon@nfan.co.uk

Copyright Fläkt Group 2003 - 2020

© copyright 2021 Yacoustics – All rights reserved

Northern Fan Supplies Ltd

Drawing and Dimensions

JM Bifurcated 200 Deg C

NFAN

Quotation Number	:	Fan Code	: 50JM.BIF/20/2/6/22
Project Name	: Crosskeys - revision	Customer	: Mainland Catering
Item Reference:	: Extract Option 2	Date:	: Tuesday, October 12, 2021

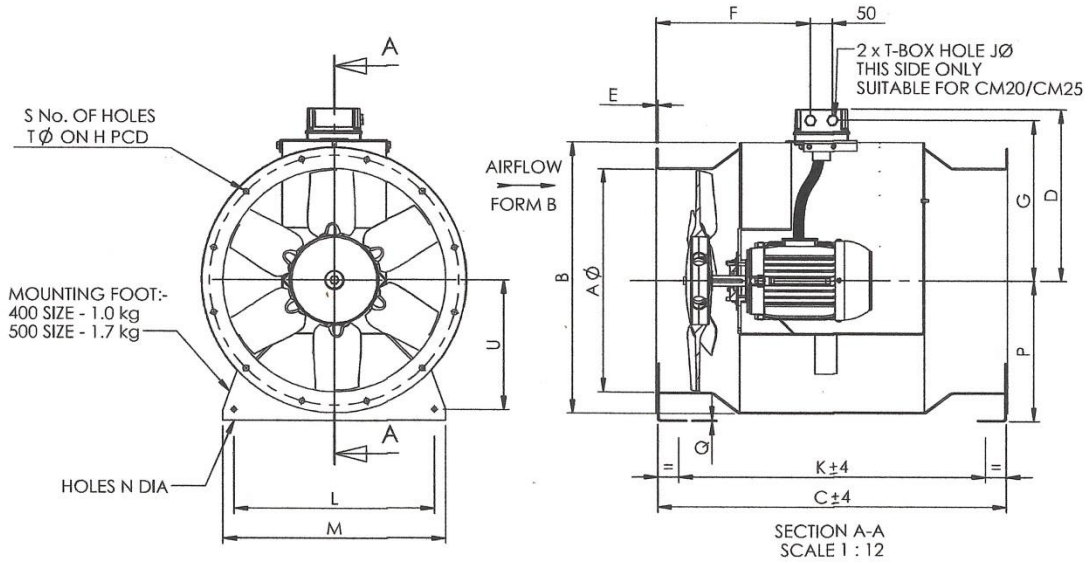

A	500
B	610
C	787
D	383
E	3
F	347
G	361
H	560
J	20
K	691
L	450
M	500
N	10
P	315
Q	3
S	12
T	12
U	290
Weight (kg)	76

Notes : Dimensions shown in mm / Weight in kg

Reference:805743

This drawing shows dimensions that should be used as a guide only and are subject to change. Certified drawings are available on request.

Unit E1 Logford Trading Estate
Thomas Street, Stretford, M320JT
Tel: 01618641777 Fax: 01618642777

Website: nfan.co.uk
Email: jon@nfan.co.uk

Copyright Fläkt Group 2003 - 2020

© *copyright* 2021 Yacoustics – All rights reserved

Northern Fan Supplies Ltd
Technical Data Sheet
JM Aerofoil

NFAN

Quotation Number	:	Project Code	: BA-21396-3
Project Name	: Crosskeys - revision	Customer	: Mainland Catering
Item Reference:	: Supply	Date:	: Tuesday, October 12, 2021

Fan Code	56JM/20/4/6/30
Fan Diameter / Size	560 Size / mm
Blades	6
Fan Speed	1420 rpm
Velocity	10.6 m/s
Blade Angle	30°
Installation Type / Form of Running	C / B (Horizontal)
Fan Casing	Long
Requested Duty	2.58m³/s @ 191 Pa (static)
Outlet Dynamic Pressure	67 Pa
Duty Shaft Power	0.951 kW
Max Shaft Power	0.978 kW
Total Efficiency	72.0 %
Motor Frame	CT9 [Class F]
Motor Rating	0.970 kW
Full Load Current	6.9 A
Starting Current	13.5 A
Motor Mounting	Pad
Electrical Supply	220-240 Volts 50 Hz 1 Phase
Start Type	DOL
Motor Winding	Standard
Enclosure	Standard All
ErP [FMEG] Rating	N 40 (ErP Compliant)
ErP [FMEG] Target	N 40
FMEG Blade Angle [Range]	30° [26° - 30°]
Measurement Category	C (Static)
VSD	N
Fan + Motor Efficiency	34.9% (2.3 m³/s @ 233 Pa)
Motor Input Power (ErP)	1.53 kW
SFP value	0.59 W/(l/s) @ Requested Duty
Power from mains	1.53 kW
Energy Consumption	4579 kWh (3000 h/year)
Running Cost / Year	£549
Air Density	1.2 kg/m³ / 20 °C / 0 m / 50% RH
Smoke Venting	Non Smoke Venting
Product Number	DX571459

Performance data has been derived from tests carried out in a Flakt Woods laboratory, in accordance with ISO 5801 and is specifically applicable for Ducted installations. When an electronic controller is incorporated, enhanced motor noise can occur - particularly when the operating speed is well below maximum. FWL therefore recommend using an auto transformer speed controller for noise sensitive applications. Bifurcateds are Erp exempt when used continuously at >100C. They are not for use in the EEA at lower temperatures.

Acoustic data has been derived from tests carried out in a Flakt Woods laboratory, in accordance with BS 848 Pt 2, 1985 / ISO 5136 under Ducted conditions. The LpA figure provided is the overall Inlet sound pressure level calculated at the specified distance, under spherical, free field conditions. Breakout levels stated are estimated from induct sound power levels and are provided for guidance.

Acoustic figures for adjusted running speeds have been interpolated and are for reference only.

This Offer is made subject to the latest version of our A100-19 Terms and Conditions, a copy of which can be made available on request.

	Sound Spectrum (Hz)								Overall	
	63	125	250	500	1k	2k	4k	8k	Lw*	LpA @ 3 m**
Inlet*	81	82	78	77	75	71	68	63	86	59
Outlet*	83	84	78	77	75	72	69	64	87	59
Breakout*	83	84	78	77	75	72	69	64	87	59

* Lw dB re 10^{-12} W ** dBA re $2x10^{-5}$ Pa

Sound data at requested duty.

Description	Qty
Fan	
DX571459 - 56JM/20/4/6/30	1
Accessories	
Thermostat	1

Unit E1 Logford Trading Estate
Thomas Street, Stretford, M320JT
Tel: 01618641777 Fax: 01618642777

Website: nfan.co.uk
Email: jon@nfan.co.uk

Copyright Fläkt Group 2003 - 2020

© copyright 2021 Yacoustics – All rights reserved

Northern Fan Supplies Ltd
Performance Chart
JM Aerofoil

NFAN

Quotation Number	:	Project Code	: BA-21396-3
Project Name	: Crosskeys - revision	Customer	: Mainland Catering
Item Reference:	: Supply	Date:	: Tuesday, October 12, 2021
		Fan Code	: 56JM/20/4/6/30

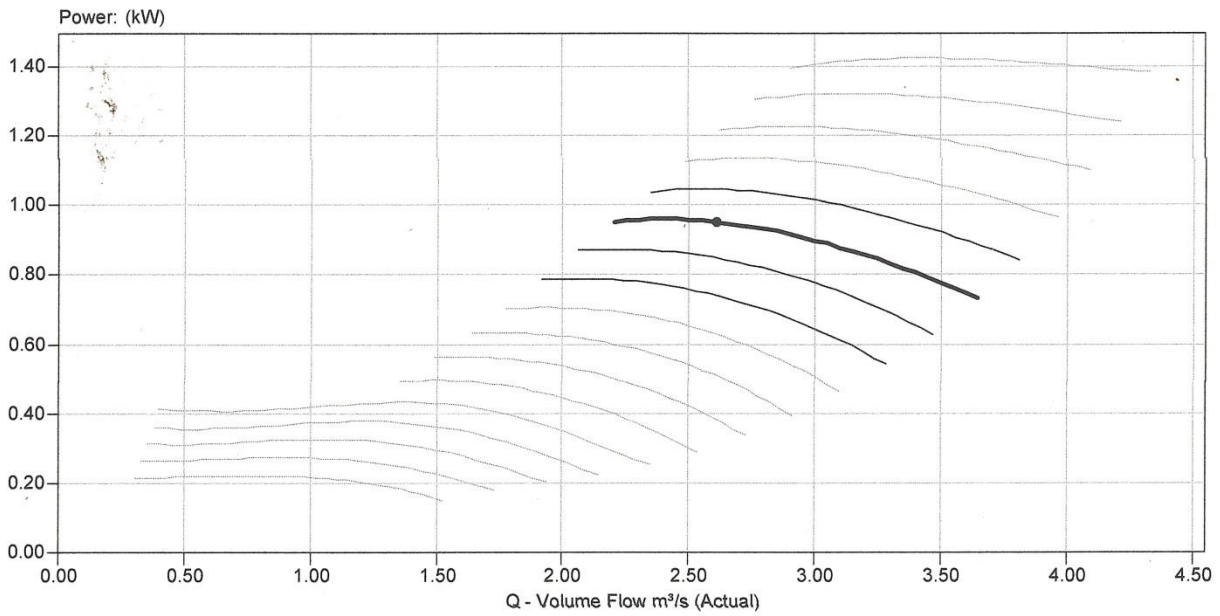

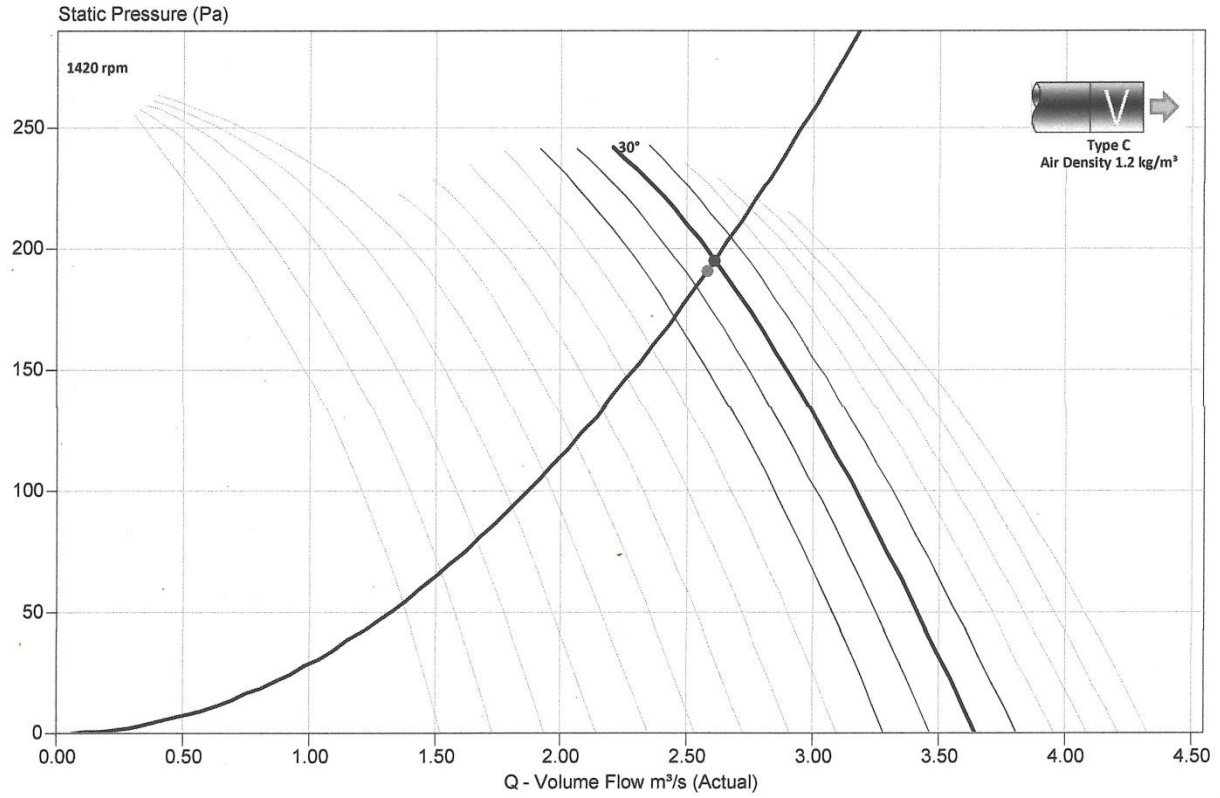

© copyright 2021 Yacoustics – All rights reserved

Unit E1 Logford Trading Estate
Thomas Street, Stretford, M320JT
Tel: 01618641777 Fax: 01618642777

Website: nfan.co.uk
Email: jon@nfan.co.uk
Copyright Fläkt Group 2003 - 2020

Northern Fan Supplies Ltd
Drawing and Dimensions
JM Aerofoil

NFAN

Quotation Number	:	Fan Code	: 56JM/20/4/6/30
Project Name	: Crosskeys - revision	Customer	: Mainland Catering
Item Reference:	: Supply	Date:	: Tuesday, October 12, 2021

C	375
K	289
Weight (kg)	38

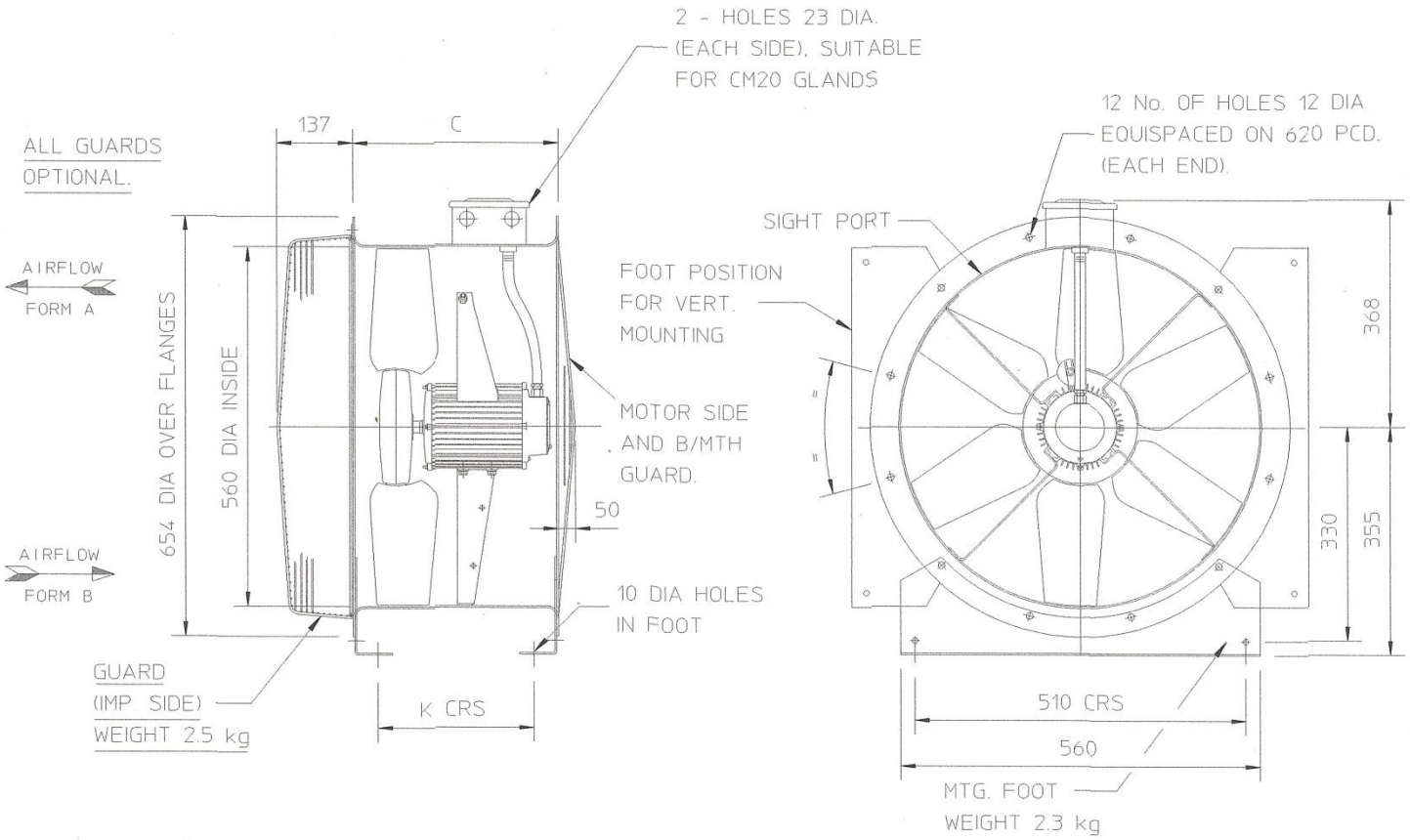

Notes : Dimensions shown in mm / Weight in kg

Reference:D248975

This drawing shows dimensions that should be used as a guide only and are subject to change. Certified drawings are available on request.

Unit E1 Logford Trading Estate
Thomas Street, Stretford, M320JT
Tel: 01618641777 Fax: 01618642777

Website: nfan.co.uk
Email: jon@nfan.co.uk

Copyright Fläkt Group 2003 - 2020

© *copyright* 2021 Yacoustics – All rights reserved

ANNEX F – Attenuator (example)

© copyright 2021 Yacoustics – All rights reserved

Conic-Flow® Silencer Type: CS

With Forward and Reverse Flow Ratings

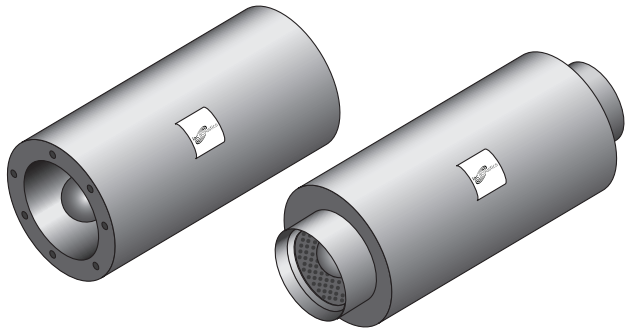

Supplied as Standard

- Aerodynamic inlet cone to reduce pressure drop and conserve energy
- Perforated galvanised steel facings to all silencer internal elements to protect acoustic media from damage and erosion

Designating Silencers: Example

Model: 300-CS-900

Pipe Diameter	Type	Length
300mm	CS	900mm

Options: Energy saver tail cone provides a significant decrease in pressure drop, resulting in a 33% decrease in silencer energy consumption, with no effect on the silencer acoustic characteristics. See page 46 for additional information.

Dynamic Insertion Loss (DIL) Ratings: Forward (+) / Reverse (-) Flow

Pipe Diameter - IAC Model - length (mm)	Octave Band	1	2	3	4	5	6	7	8
	Hz	63	125	250	500	1K	2K	4K	8K
	Silencer Face Velocity, m/s	Dynamic Insertion Loss, dB							
300-CS-900	-20	9	13	22	32	36	35	31	21
	-10	7	10	19	31	34	35	32	26
	0	6	10	18	31	34	36	33	27
	+10	4	9	16	30	34	37	33	27
	+20	3	8	14	29	33	39	33	27
600-CS-1200	-20	10	12	20	34	43	34	20	11
	-10	8	11	18	34	40	35	22	13
	0	7	11	18	30	38	36	23	17
	+10	5	11	18	26	36	37	24	20
	+20	4	10	17	25	34	37	27	21
900-CS-1800	-20	11	16	22	36	38	28	19	11
	-10	10	15	20	35	37	29	21	12
	0	10	15	20	35	37	30	22	15
	+10	9	14	19	35	36	31	23	17
	+20	8	13	18	33	35	32	24	18
1200-CS-2400	-20	12	18	23	37	36	20	13	11
	-10	11	17	21	36	35	22	14	12
	0	11	17	21	35	35	24	17	14
	+10	10	16	20	34	35	26	20	16
	+20	9	14	19	34	35	27	21	17
1500-CS-3000	-20	13	20	25	38	33	16	11	10
	-10	12	19	24	36	32	18	12	11
	0	12	18	24	36	32	21	15	13
	+10	11	17	23	35	31	23	17	15
	+20	10	15	22	35	31	24	18	16

© copyright 2021 Yacoustics – All rights reserved

This page intentionally left blank

© *copyright* 2021 Yacoustics – All rights reserved

© *copyright* 2021 Yacoustics – All rights reserved

Yacoustics LTD Reg. No. 11747271
T: +44 (0) 7769 377068
E: hello@yacoustics.co.uk
www.yacoustics.co.uk