Build Phase Contamination Risk Mitigation Strategy

Bennett Street, Manchester

Reference: 15-974-R3-4
Date: August 2023

BUILD PHASE CONTAMINATION RISK MITIGATION STRATEGY

Bennett Street
Manchester
M12 5NL

Prepared for:
Kellen Homes

Report Ref: 15-974-R3-4
Date Issued: August 2023

E3P

Taylor Road
Trafford Park
Urmston
Manchester
M41 7JQ

+ 44 (0) 161 707 9612
https://e3p.co.uk

Registered in England
CRN: 807255262

QUALITY ASSURANCE

Report reference	15-974-R3

REV REF:	DESCRIPTION	AUTHOR	CHECKED	AUTHORISED	DATE
R1	First issue	MD	SC	MD	21.06.23
R2	Updated in line with EHO comments.	MSD	SC	MD	07.08.23
R3	Updated with clean cover system details	MSD	SC	MD	14.08.23
R4	Updated in line with EHO comment	MSD	SC	MD	25.08.23

This report has been prepared for the sole benefit, use, and information for the client. The liability of E3P T/O Environmental Engineering Partnership Limited with respect to the information contained in the report will not extend to any third party. This report has been prepared by the qualified persons as listed below.

AUTHOR	QUALIFICATIONS	DATE
M. Dyer	BSc(Hons), FGS, AIEMA, MIEnvSc, CEnv	25th August 2023
Reviewer	**Qualifications**	**Date**
S. Cox	BSc(Hons), FGS, AIEMA, MIEnvSc, CEnv	25th August 2023
Signature	**Qualifications**	**Date**
M. Dyer	BSc(Hons), FGS, AIEMA, MIEnvSc, CEnv	25th August 2023

TABLE OF CONTENTS

1. BACKGROUND 3

2. OVERVIEW OF BUILD PHASE REMEDIATION REQUIREMENTS 4

3. CHEMICAL VAPOUR INGRESS - MITIGATION MEASURES 5
3.1. VOC Ingress Mitigation Overview 5
3.2. VOC Membrane Suitability Assessment 6
3.2.1. Membrane Selection 6
3.3. Membrane Installation Requirements 7
3.3.1. Contractors Pre-Ceommencement Requirements 8
3.4. Site-Specific Design Requirements 8
3.4.1. Design Installation Details 8

4. VAPOUR MITIGATION MEASURES VALIDATION 10
4.1. Vapour Mitigation Measures – Membrane Integrity Testing 13
4.1.1. Overview 13
4.1.2. Technical Specification 13
4.1.3. General Methodology for Air Lance Verification (ASTM D4437) 14

5. CHEMICAL VALIDATION OF CLEAN COVER SYSTEM 15
5.1. Cover System Requirements 15
5.2. Procedure for Placement and Validation of Chemically Suitable Cover System 18

6. WATER PIPELINE RISK ASSESSMENT 21

APPENDIX I LIMITATIONS 22

APPENDIX II GLOSSARY 24

APPENDIX III DRAWINGS 27

APPENDIX IV TECHNICAL DATA 29

DRAWINGS LIST

E3P : Site Location Plan ; 15-974-001
AJP : Vibro Foundation Details VOC Membrane; BEN-AJP-XX-00-DR-S-2010: P6
Piled Foundation Details VOC Membrane; BEN-AJP-XX-00-DR-S-2011: P6
Kellen: Clean Cover Location and Thickness Plan; KH006 SA1 – A
Cover System Sections; KHE-006-CSS01

1. BACKGROUND

Kellen Homes have instructed E3P to prepare a Build Phase Contamination Mitigation Strategy to document the mitigation measures needed to ensure compliance with an approved remediation strategy to ensure that relevant planning conditions are met and can be subsequently discharged.

The subject site has been subject to numerous phases of site investigation which are summarised in Table 1.

The LPA and the EA have reviewed these documents, and the subsequent remediation and enabling works and associated building phase mitigation measures have been approved.

E3P has prepared this document to clearly define the design requirements for all remediation aspects that will form part of the construction of the low-rise dwellings and thus ensure that the potential pollution pathways are mitigated appropriately.

All design requirements and procedures as set out herein must be installed to the required standard with appropriate validation quality assurance to ensure the satisfaction of the relevant planning conditions.

If any of the procedures outlined in this summary are not completed, this may delay obtaining a Warranty and Council for Mortgage Lenders and a Certificate of Completion.

TABLE 1 PREVIOUS WORKS

Date of SI & Ref	- **WYG** – *Phase II Geo-Environmental Ground Investigation Interpretative Report*. Reference E11056-1, January 2008. Prepared for Braidwater Ltd. - **E3P** – *Phase I and II Geoenvironmental Site Assessment*. Ref: 15-974-R1-2, dated December 2022, prepared for Kellen Homes. - **E3P** – *Ground Gas Addendum Report*. Ref: 15-974-R3-1, dated January 2023, prepared for Kellen Homes.
Date of Remediation Strategy & Ref	- E3P – Remediation & Enabling Works Performance Specification (Report Ref: 15-974-R2-2), dated January 2023

2. OVERVIEW OF BUILD PHASE REMEDIATION REQUIREMENTS

The detailed Tier 2 Qualitative Human Health Risk Assessment and developed Conceptual Site Model (CSM) prepared following industry best practice guidance Land Contamination: Risk Management (LCRM) July 2023, identified a number of potential pollution migration pathways. The risk-based assessment prepared by E3P determined that pathway interruption is the most appropriate mechanism to ensure no unacceptable risk to the critical receptor while promoting sustainable development.

- *SVOCs above the limit of detection (LOD) have been identified across the site within Made Ground. These detected compounds have been compared to the available Atkins ATRSK tables, and this indicates one exceedance at WS121. Dibenzofuran, carbazole, anthraquinone, 2-methyl naphthalene and 2,4-dimethylphenol are not prescribed GAC values. As such, any presence has been considered a potential risk.*
- *In relation to SVOCs (including Naphthalene), VOCs and TPH C10-16, these contaminants have primary exposure pathways related to vapour. The majority of the SVOC exceedances are identified in locations with elevated levels of volatile TPH residue within the soil matrix, which is attributed to be the source of the SVOCs. On review of the current site activities, it is considered highly likely that the original cobbles across the site are bound by coal tar cement. Prior to the supplementary investigation, the cobbles had been lifted and removed. This recorded a reduction in TPH exceedances – as anticipated – as the source of TPH, the coal tar, has been removed.*
- *Concerning the mercury exceedances identified, WS123B, WS135 and WS136 In relation to mercury exceedances, for most samples analysed, mercury was found to be non-volatile and therefore, the risk can be mitigated through the construction and validation of suitable clean cover systems. Where samples could not be quantified, a theoretical vapour risk remains.*
- *To mitigate the residual risk from SVOCs and theoretical mercury vapour risk across the site, a provision for vapour membranes should be made for all proposed plots. This would remove the contamination pathway between source and receptor and mitigate the risk to the end-user against indoor vapour inhalation.*
- *The build phase specification and design will be given within the Build Phase Mitigation Plan, under a separate cover.*
- *Chemical analysis of the natural drift deposits has identified these soils as acceptable for use as subsoil within landscaping areas with no anthropogenic elements.*

Once the remediation and enabling earthworks have been completed and validated in strict accordance with the agreed Remediation Strategy, the following contamination risk mitigation measures are required in the construction of the low-rise residential dwellings:

- Installation and validation of specialist mitigation measures that will facilitate the dispersal of vapour accumulation within the sub-floor void with specialist membranes and construction design works to inhibit the ingress of hazardous volatile chemicals and ground gasses into the dwellings;
- Laboratory testing and chemical validation of imported or site-derived topsoil and subsoil;
- Placement of a 600 mm cover system using certified material and geotextile break layer with appropriate validation within all private front and rear garden areas;
- Placement of 450 mm cover system within POS and landscaped areas; and,
- Installation of appropriate potable water supply pipework (barrier pipe – see United Utilities Risk Assessment for further detail).

3. CHEMICAL VAPOUR INGRESS - MITIGATION MEASURES

The Contaminated Land Risk Assessment and developed Conceptual Site Model identified a theoretical risk from vapour intrusion associated with residual impact to the Made Ground soils that underlie the development site.

The risk associated with a vapour intrusion pathway will be mitigated through the construction of all dwellings with a passively ventilated sub-floor void and the installation of a specialist membrane that will impede the ingress of any vapour into a dwelling (critical receptor).

CIRIA 748 provides guidance with respect to the design, specification and validation of measures that will ensure that the potential for vapour ingress into a dwelling is mitigated in full.

Residential buildings are often constructed on brownfield sites where volatile organic compounds (VOCs) are present in the ground, as is the case for the subject site.

The assessment of vapour risk and potential migration pathways linking the source and receptor should include multiple factors:

- **Type of membrane, manufacturers details and performance;**
- **Floor slab construction; and,**
- **Sub-floor ventilation potential.**

It is possible to consider effects on the ground that will retard vapour migration (e.g. bio-degradation and other processes).

The primary issue associated with VOC ingress is typically long-term chronic health risk materially different from the acute health effects and explosive risk of permanent gases (methane and carbon dioxide).

When considering the design, specification and installation of membranes to mitigate a vapour intrusion risk, the specific permeation potential of VOC compounds must be considered.

3.1. VOC INGRESS MITIGATION OVERVIEW

The residual risk posed by a variety of potential VOCs associated with vapour intrusion into the proposed dwellings will be mitigated by a multi-layered pathway intervention strategy that will incorporate the following key attributes:

- Removal of all grossly impacted soil and groundwater during the site remediation and enabling earthworks, this approach will ensure the reduction of the 'challenge' compounds to ensure no direct contact with the built environment.

- Construction of all residential structures with a passively ventilated sub-floor void. Verification of the sub-floor void and passive ventilation system will be completed in accordance with the validation and checking requirements set out in Section 4 of this report.

- Selection, design and installation of a specialist membrane that will mitigate the migration of residual VOC compounds into the new dwellings. All membranes will be fully inspected and validated in accordance with industry best practise.

3.2. VOC MEMBRANE SUITABILITY ASSESSMENT

The subject site and Initial Conceptual Site Model (CSM) have been utilised to identify the primary groups of VOC contamination impact, and this assessment ensures the selection of the appropriate barrier performance against the identified group of VOCs.

As a standard and basic chemical rule (CIRIA 748) 'like is soluble in like'. Therefore, if the membrane material and contaminant of concern are both polar or non-polar, the solubility will be high. Where the chemical types are opposite (Polar and Non-Polar) permeation will be low.

For example, polyamide is polar, providing a good barrier against non-polar chemicals such as VOC's (BTEX).

HDPE is non-polar and therefore provides poor protection against similar non-polar aromatic VOC's.

Elemental mercury is also non-polar, therefore, polymede is a good barrier to this chemical.

3.2.1. MEMBRANE SELECTION

All membranes to be considered must be subject to testing in accordance with ISO 15105-2:2003.

The primary Volatile Organic Carbon (VOC) pollution pathways at this site are listed in Table 3.1.

Table 3.1 VOC Chemicals of Concern

CHEMICAL GROUPING
Polycyclic Aromatic Hydrocarbons (such as Naphthalene) – Non polar
Volatile Aromatic Petroleum Range Hydrocarbons (C5-C10) (such as BTEX) – Non Polar
Polychlorinated Organic Compounds (such as Dibenzofuran) - Non Polar
Residual low-level mercury – Non Polar

When considering the correct selection of a VOC membrane, the following key parameters require robust consideration:

- The permeation rate of the identified volatile chemicals should be sufficiently low.
- The membrane's mechanical properties (strength, tear resistance etc.) should not be adversely affected by the identified chemicals of concern to the extent that the membrane performance is adversely affected.
- The membrane should be able to withstand the physical stresses exerted in both the temporary state during construction and the permanent condition.
- The membrane should not degrade from biological degradation (oxidisation), stress or cracking).

All of the primary VOC's of concern are identified as Non-Polar chemical groupings. Therefore, a membrane with polar attributes is considered the most appropriate mitigation material in this instance. Based on the review of the challenger compounds within the risk assessment and requirements for a membrane to limit and impede their ingress without undue degradation, the following membranes have been selected as being technically suitable.

- **JUTA GP Titanflex**
- **Visqueen HC Blok**

The technical data sheets for both membranes are attached to this report within Appendix IV.

3.3. MEMBRANE INSTALLATION REQUIREMENTS

Due to the meagre permeation rates that will be required to minimise the risk associated with VOC vapour intrusion, it is essential that the membrane is installed correctly and is not damaged afterwards during construction.

CIRIA C748 defines the dominant mode of fluid transport through poorly installed membranes is via holes present due to poor seals and weld, material defects and damage during construction. This mode of transport is significantly greater than permeation through intact membranes.

Installation by suitable trained, and qualified persons and subsequent validation by an independent specialist is vitally important in ensuring the long-term integrity of the membrane and, thus, removal of the theoretical exposure pathway associated with VOC vapour migration.

Verification integrity testing requirements are presented in Table 3.2 as taken from CIRIA 748 (adapted from Mallett et al, 2014).

SITUATION B: LOW-RISE HOUSING – REQUIREMENTS			
Gas Risk	*Type of Slab*	*Installer Experience*	*Level of verification and integrity testing*
High Risk	All slabs min 150mm ventilated sub-floor void.	Qualified and experienced installer (all operatives to hold recognised qualification)	Verifier (consultant of third party qualified and experienced) to conduct through verification (visual) inspection of all plots where a vapour membrane is installed. All joints, pipe penetrations etc. to be air lanced to ASTM D4437. Integrity testing will be completed on 50% of the first ten plots constructed and then at a frequency of 10% of the remaining plots to be finished.

3.3.1. CONTRACTORS PRE-CEOMMENCEMENT REQUIREMENTS

Prior to the commencement of any installation works, the following will be provided to E3P as supervising engineer/consultant for review.

- Relevant qualifications of all operatives (minimum NVQ Level 2 – Gas protection INstallaiton).
- Detailed installation plan inclusive of method Statement, CQA Procedures and qualifications.
- Provision of the final choice of the membrane system to be utilised.

3.4. SITE-SPECIFIC DESIGN REQUIREMENTS

When considering the risk-based assessment, site review and appraisal of design requirements, the Client has commissioned the structural engineer to produce a series of working drawings that clearly define the mitigation system that combines the ventilation requirements and membrane installation.

3.4.1. DESIGN INSTALLATION DETAILS

FIGURE 3.1 – GENERAL EXTERNAL WALL

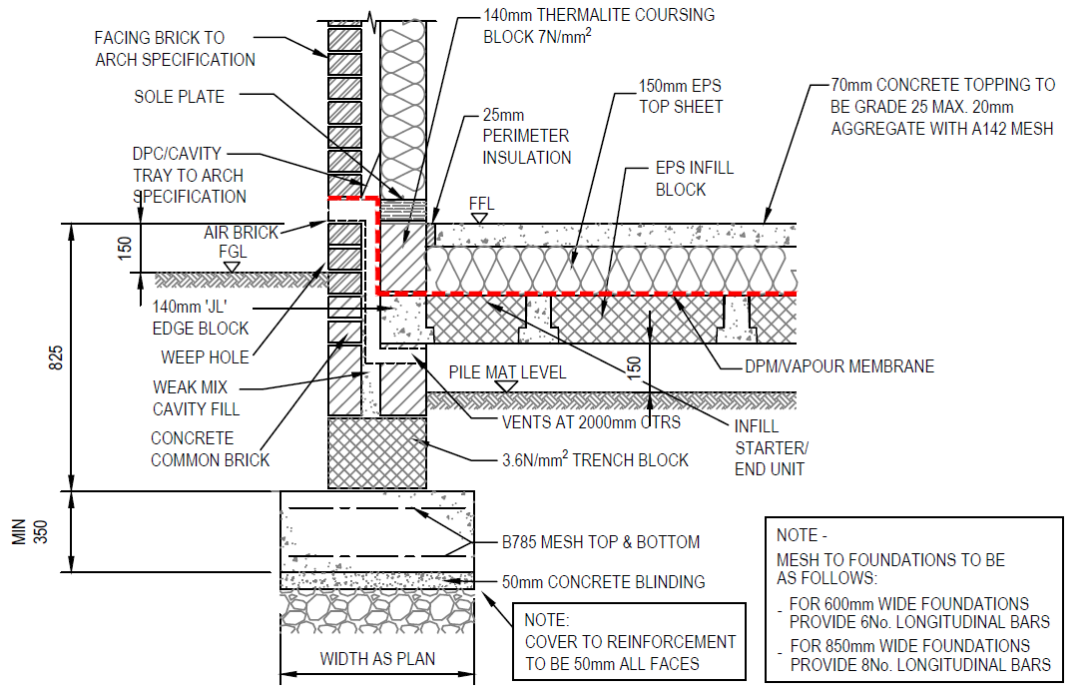

Figure 3.1 confirms the detail of a 150mm passively ventilated sub-floor void with a continuous VOC membrane.

FIGURE 3.2 – GENERAL SERVICE PENETRATION

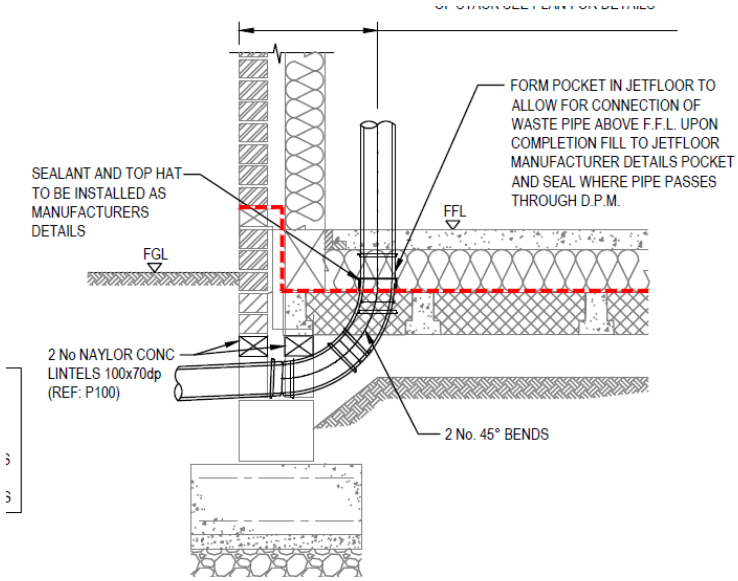

Figure 3.2 details service penetrations within sealed 'top' hats.

FIGURE 3.3 – PARTY WALL

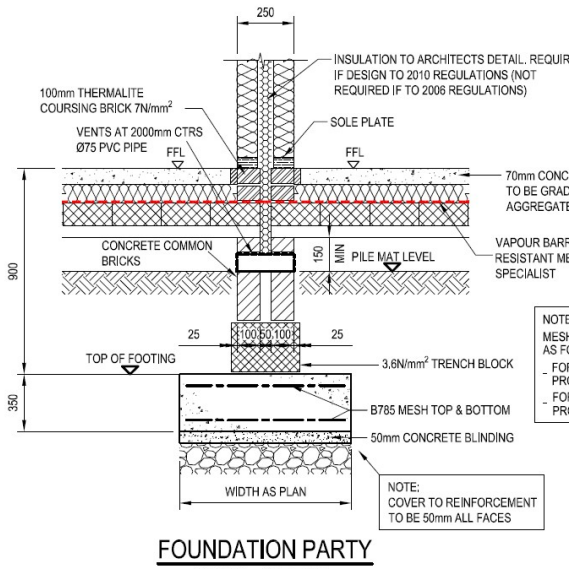

The AJP engineering details are included in Appendix IV with excerpts in Figures 3.1-3.3 (above).

4. VAPOUR MITIGATION MEASURES VALIDATION

A qualified person will validate all VOC vapour mitigation measures in accordance with the requirements of CIRIA 748 and CIRIA 735.

As noted in CIRIA 735, the EA recommends avoiding conflicts of interest in verification. A contractor or gas membrane supplier certifying their own work or product is considered a conflict of interest. All verification and validation works are to be completed by an independent qualified specialist with no conflict of interest.

Verifying vapour protection systems is not just the inspection of a proprietary membrane, it should incorporate all aspects, including passively ventilated sub-floor voids, telescopic ventilation, floor slab types, membranes, service penetrations and workmanship.

The installation and verification process for vapour membranes will include the following key attributes.

1. Membrane to be installed by NVQ Level 2 installer;
2. Prior to the commencement of any works, the specialist contractor will produce a detailed installation plan and method statement. CQA Procedures and qualifications for all parties involved in the construction process. This CQA and Verification plan will be subject to approval by the supervising consultant and will be included within the validation statement to be issued to the LPA;
3. The verification consultant will be deemed suitably competent. This will be either chartered status with suitable experience or formal training in CIRIA 735;
4. Sub-floor void to be inspected at 50% ratio of substructures completed;
5. Each and every vapour membrane to be fully inspected and validated;
6. Half (every other) of the first ten plots and every tenth plot thereafter will be subject to air-lancing integrity testing per an internationally recognised standard. The installer and integrity tester will provide the methodology for their work. The independent verifier will be in attendance during the integrity test works;
7. A detailed verification report will be prepared for each and every plot to be installed with a vapour membrane.

The validation of ground gas mitigations should be completed in line with the items specified in Table 4.1.

TABLE 4.1 VENTILATION AND MEMBRANE MITIGATION MEASURES VALIDATION ITEMS

INSPECTION	METHOD
Product Verification	Confirmation that suitable products have been procured for installation to consist of photographs of product types, labels on packaging and delivery tickets.
Passively Ventilated Sub-floor Cavity	A qualified engineer/consultant will be required to attend the site and validate the compliant construction of the sub-structure with a minimum 150mm sub-floor void. Due to the nature of the construction process and construction using pre-cast suspended segmental floors, it is considered appropriate to check and verify 50% of the dwellings constructed with the minimum 150mm sub-floor void.
Wall Cavity Inspection	Confirmation that the gas membrane spans the external wall cavity above the periscopic vents.
General Condition	The membrane is to be inspected to ensure there are no tears, punctures or rips.
Structural reinforcement	Here structural reinforcement is used over a membrane, and this must either be supported by a physical barrier or be inspected after placement over a membrane to ensure no damage.
Jointing	The engineer is to check the overlaps between membranes are correctly sealed with sufficient overlaps. The membrane is to be jointed and sealed in accordance with the pre-agreed CQA plan and design requirements.
Service Entry Points	Verification of the presence of preformed top hats sealed to the pipe and membrane as per the construction detail.
Remedial Action	Any damage or requirement for remedial action must be recorded and notified in writing. Once repaired, the verifier will undertake the necessary reinspection's.
Passive Venting Systems	The engineer should verify the presence of vents at 2m centres on at least three of the external walls. Verification of the stone venting layer and presence of pipes to be supplied by photographic records from the site.
CQA / Audit	The verifier must use a ISO approved system to ensure CQA. This will include electronic data capture with time and location stamps to ensure auditability if required.

Examples of vapour membrane verification photographs are provided in Plate 4.1.

PLATE 4.1 EXAMPLE VOC MEMBRANE VERIFICATION

Plot Inspection 3 - 100%	100%
Plot Number	183
Type of Development: Other add note	House

Photo 78

Gas Characteristic Situation	CS2
Foundation Type: Other add note	Suspended Floor
Gas Membrane Type: Manufacturer, gauge, and colour.	Yellow visqueen brand not stated
Gas Membrane Condition: Open punctures, tears, rips, stretching, Presence of debris, Repairs, Signs of weakness such as raised or sunken indentations, Protection plan in place to restrict access to lain gas membrane? IF FAIL DESCRIPTION IN ACTIONS AND PHOTOS REQUIRED	Pass

Photo 79 Photo 80 Photo 81 Photo 82

Laps, welds, and joints seals: Joints lapped and sealed in accordance with manufacturer's requirements/ specification? Minimum overlap insured? Sections taped twice? Are welds complete? Appropriate joining/double-sided tape used, Folds running in line with joints? (no joints cutting across folds)	Pass

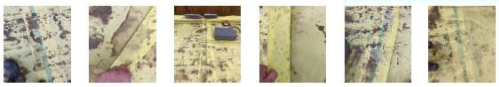
Photo 83 Photo 84 Photo 85 Photo 86 Photo 87 Photo 88

Service entries seals: Top hats seal arrangements fixed around service entries? Use of Jubilee clips?	Yes

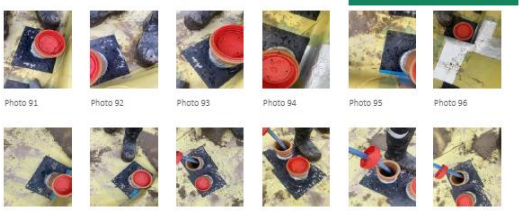
Photo 91 Photo 92 Photo 93 Photo 94 Photo 95 Photo 96
Photo 97 Photo 98 Photo 99 Photo 100 Photo 101 Photo 102
Photo 103 Photo 104

Type of joints/ Lapping	Taped
Corners / Internal joints: Check all corners are correctly formed or contractor has used performed corners.	Pass

Photo 105 Photo 106 Photo 107 Photo 108 Photo 109 Photo 110
Photo 111 Photo 112 Photo 113 Photo 114 Photo 115

Extent of Coverage: Is the membrane covering the entire plot? Does membrane span over outside walls?	Yes

Photo 116 Photo 117 Photo 118 Photo 119 Photo 120

Condition of sub-grade and underside of gas membrane: Check that the subgrade does not contain rough/uneven surfaces, is appropriately clean and that there are no hard/sharp objects. That protective sand blinding or geotextile (if specified) is present and meets the design criteria.	Pass
Slab / membrane condition (is membrane clear of debris or insulation): Can membrane be fully seen and photographed – ask contractor to remove an debris so membrane can be fully seen an inspected – this is a requirement of NHBC and local authorities.	Pass

Photo 121 Photo 122 Photo 123 Photo 124

Passive Venting

Sub-floor Void: Is a check possible on future plots (insert Plot number or NO in text box)	No
External Wall Air bricks: Numbers, size. positions as design drawing? (Minimum of 3 walls)	Pass

Photo 125 Photo 126 Photo 127 Photo 128

4.1. VAPOUR MITIGATION MEASURES – MEMBRANE INTEGRITY TESTING

4.1.1. OVERVIEW

The low-rise residential development is classified as a high-risk receptor following the principles outlined within CIRIA 748. This requires integrity testing of the installed membrane.

E3P has determined that it will be necessary to undertake integrity testing within half of the first 10% of plots constructed, with subsequent testing of one in ten.

The plots to be subject to integrity testing will be determined within the specialist contractor's CQA plan. However, it must be recognised that the actual plots inspected may vary throughout the installation works due to programme and operational constraints.

A dynamic record to ensure up-to-date and accurate records of the ongoing integrity testing will be held by the specialist contractor to be provided to the validation consultant.

4.1.2. TECHNICAL SPECIFICATION

All testing is to be completed in accordance with ASTM D4437, 2008 Edition, April 1, 2008 - Standard Practice for Nondestructive Testing (NDT) for Determining the Integrity of Seams Used in Joining Flexible Polymeric Sheet Geomembranes.

ASTM D4437 is a recognised standard practice published by ASTM International. It outlines the procedures for conducting nondestructive testing (NDT) to assess the integrity of seams used in joining flexible polymeric sheet geomembranes. The purpose of this standard is to ensure that the seams meet the required quality and performance standards without causing damage to the geomembranes during the testing process.

This standard is applicable to situations where flexible polymeric sheet geomembranes are joined using various seam techniques, such as heat fusion, adhesive bonding, or other mechanical methods. It is essential for applications where geomembrane integrity is critical to prevent leakage, maintain containment, or protect the environment from hazardous substances.

ASTM D4437 provides detailed instructions on various nondestructive testing methods that can be employed to assess seam integrity. These methods may include visual examination, air lance testing, vacuum testing, vacuum-box testing, or other suitable techniques. The choice of testing method may depend on the specific application, geomembrane material, and project requirements.

The standard specifies the necessary equipment and tools needed for conducting nondestructive testing accurately and reliably. This will involve specialised testing equipment, visual inspection aids, vacuum apparatus, and safety gear to ensure the safety and effectiveness of the testing process.

ASTM D4437 also outlines the acceptance criteria that must be met for the tested seams to be considered acceptable.
These criteria is based on observed defects, leakage rates, or other relevant parameters, ensuring that the seams meet the required standards for the specific application.

To ensure the quality and integrity of seams in joining flexible polymeric sheet geomembranes, it is essential to adhere to ASTM D4437. Compliance with this standard provides confidence in the performance of the seams and helps mitigate the risk of potential leaks or failures that could lead to environmental contamination or compromised containment systems.

The values stated in inch-pound units are to be regarded as standard. The values given in parentheses are mathematical conversions to SI units that are provided for information only and are not considered standard.

4.1.3. GENERAL METHODOLOGY FOR AIR LANCE VERIFICATION (ASTM D4437)

Before entering the site, ensure all site personnel are appropriately inducted and authorised to work on site.

Prior to the visit:

a) Visually inspect the compressor, along with the hose and lance and check for any problems, replace if necessary;
b) Check the oil and fuel level as well as drain any condensate from the compressor.
c) Carrier vehicle checks are conducted before leaving base

Scope of Works

- Have a visual walkover of the area that requires air lance verification prior to air lance testing;
- If seams are taped, ensure that there is no overlap tape present prior to air lance testing;
- If overlap tape is present, request ground workers or the membrane fitters to remove this tape before you conduct the visual inspection and air lance test;
- If multiple non-conformances are identified with a simple visual and pick test then **DON'T** conduct the air lance test until the ground workers have rectified the problems;
- If minor non-conformances are identified, then proceed with the air lance testing;
- Make sure test is completed in forward facing direction placing the nozzle of the lance no more the 50mm from the seam edge, squeeze the trigger and directing the air into the seam, walk at a slow pace up the seam line;
- When you reach a non-conformance, mark the edges of the non-conformance;

The results of all integrity testing are to be provided to the supervising validation consultant.

5. CHEMICAL VALIDATION OF CLEAN COVER SYSTEM

5.1. COVER SYSTEM REQUIREMENTS

The Remediation Strategy for the site, with respect to the human health of the future site users, includes the provision of a chemically suitable clean material to be installed in all garden and landscaped areas; the construction of the clean cover/placement of clean material shall consist of:

- 600 mm clean cover system within garden areas;
- 450mm clean cover system within front gardens deemed to be functional landscaping;
- Geotextile break layer in all private front and rear garden areas, and,
- 450 mm clean cover system within areas of landscaping and POS.

The above depths are in line with Section 6 of the Manchester City Council Planning & Contaminated Land Technical Guidance, dated February 2021. Where trees are proposed a deeper growing medium comprising 900 mm may be required.

Clean cover systems are to be placed in line with Kellen Homes drawings KH006-SA1-A and KHE-006-CSS01.

In accordance with the current requirements of the regulatory authorities, validation samples will be collected from all materials that are to be imported to confirm the proposed development will pose no unacceptable risk to human health or the wider environment.

Subsoil and topsoil shall be free of any deleterious materials, such as building materials, timber, plastics etc and conform to the requirements of BS 3882:2007.

The sampling frequency for these materials is presented in Table 5.1.

TABLE 5.1 SPECIFICATION FOR SOIL TESTING

MATERIAL USE	TESTING FREQUENCY	SUITE OF ANALYSIS
Subsoil Greenfield Source (450 mm Garden Cover)	1 Sample per 200 m^3	A/B/C/D
Subsoil Brownfield Source (450 mm Garden Cover)	1 Sample per 50 m^3	A/B/C/D
Topsoil Greenfield Source (150 mm Garden Cover)	1 Sample per 200 m^3	A/B/C/D
Topsoil Brownfield Source (150 mm Garden Cover)	1 Sample per 50 m^3	A/B/C/D
General Engineering Fill (Class 1 and 2 Soil)	1 Sample per 1000 m^3	A/B/C/D

Notes
Suites of Analysis:

A. Speciated PAH.
B. Speciated TPH (C5-C35).
C. Asbestos (ID).
D. CLEA Inorganic Heavy Metals.

E. Speciated PAH, Banded TPH and VOCs.
F. SVOC/Speciated TPH.
G. On-Site Screening for VOC Using Calibrated PID.
H. Leachate 2:1 Speciated PAH and Banded TPH.

All analyses prescribed above are to be completed by UKAS accredited laboratory.

Source testing certificates and validation testing of the imported materials shall be provided and are required to comply with the criteria set out in Table 5.2.

TABLE 5.2 REMEDIATION TARGETS- LOW RISE RESIDENTIAL END USE

DETERMINAND	UNITS	WITHIN 600 mm COVER SYSTEM (GARDEN)	HARD STANDING AND >600 mm OF COVER	PUBLIC OPEN SPACE 300 mm COVER	PUBLIC OPEN SPACE > 300 mm	PATH-WAY
Arsenic	mg/kg	37[(i)]	40[(ii)]	79[(iii)]	170[(iv)]	1
Cadmium	mg/kg	11[(i)]	85[(ii)]	120[(iii)]	532[(iv)]	1
Chromium (Hexavalent)	mg/kg	6[(i)]	6[(ii)]	7.7[(iii)]	220[(iv)]	1
Lead	mg/kg	200[(vi)]	310[(vii)]	630[(viii)]	1300[(viii)]	1
Elemental Mercury	mg/kg	1.2[(i)]	1.2[(ii)]	16[(iii)]	30[(iv)]	2
Nickel	mg/kg	130[(i)]	180[(ii)]	230[(iii)]	800[(iv)]	1
Selenium	mg/kg	250[(i)]	430[(ii)]	1100[(iii)]	1800[(iv)]	1
Copper	mg/kg	2400[(i)]	7100[(ii)]	12,000[(iii)]	44,000[(iv)]	1
Zinc	mg/kg	3700[(i)]	40,000[(ii)]	81,000[(iii)]	170,000[(iv)]	1
Phenol	mg/kg	120[(i)(xi)]	440[(xiv)(xi)]	440[(iii)(xi)]	440[(iv)(xi)]	2
Naphthalene	mg/kg	2.3[(i)(xi)]	2.3[(xiv)(xi)]	1200[(iv)(xi)]	1200[(iv)(xi)]	2
Acenaphthylene	mg/kg	170[(i)(xi)]	500[(v)]	15,000[(iii)(xi)]	29,000[(iv)(xi)]	3
Acenaphthene	mg/kg	210[(i)(xi)]	500[(v)]	15,000[(iii)(xi)]	29,000[(iv)(xi)]	1
Fluorene	mg/kg	170[(i)(xi)]	500[(v)]	9900[(iii)(xi)]	20,000[(iv)(xi)]	1
Phenanthrene	mg/kg	95[(i)(xi)]	500[(v)]	3100[(iii)(xi)]	6200[(iv)(xi)]	3
Anthracene	mg/kg	500[(i)(xi)]	500[(v)]	74,000[(iii)(xi)]	150,000[(iv)(xi)]	3
Fluoranthene	mg/kg	280[(i)(xi)]	500[(v)]	3100[(iii)(xi)]	6300[(iv)(xi)]	3
Pyrene	mg/kg	500[(i)(xi)]	500[(v)]	7400[(iii)(xi)]	15,000[(iv)(xi)]	3
Benzo(a)Anthracene	mg/kg	7.2[(i)(xi)]	11[(ii)(xi)]	29[(iii)(xi)]	49[(iv)(xi)]	3
Chrysene	mg/kg	15[(i)(xi)]	30[(ii)(xi)]	57[(iii)(xi)]	93[(iv)(xi)]	3
Benzo(b)Fluoranthene	mg/kg	2.6[(i)(xi)]	3.9[(ii)(xi)]	7.1[(iii)(xi)]	13[(iv)(xi)]	3
Benzo(k)Fluoranthene	mg/kg	77[(i)(xi)]	110[(ii)(xi)]	190[(iii)(xi)]	370[(iv)(xi)]	3
Benzo(a)Pyrene	mg/kg	2.2[(i)(xi)]	3.2[(ii)(xi)]	5.7[(iii)(xi)]	11[(iv)(xi)]	3
Indeno(123-cd)Pyrene	mg/kg	27[(i)(xi)]	45[(ii)(xi)]	82[(iii)(xi)]	150[(iv)(xi)]	3
Dibenzo(a,h)Anthracene	mg/kg	0.24[(i)(xi)]	0.31[(ii)(xi)]	0.57[(iii)(xi)]	1.1[(iv)(xi)]	3
Benzo(ghi)Perylene	mg/kg	320[(i)(xi)]	360[(ii)(xi)]	640[(iii)(xi)]	1400[(iv)(xi)]	3
TPH C_5-C_6 (aliphatic)	mg/kg	42[(i)(xi)]	42[(ii)(xi)]	42[(ii)(xi)]	10,000[(xiv)(xi)]	2
TPH C_6-C_8 (aliphatic)	mg/kg	100[(i)(xi)]	100[(ii)(xi)]	100[(ii)(xi)]	10,000[(xiv)(xi)]	2
TPH C_8-C_{10} (aliphatic)	mg/kg	27[(i)(xi)]	27[(ii)(xi)]	27[(ii)(xi)]	10,000[(xiv)(xi)]	2
TPH C_{10}-C_{12} (aliphatic)	mg/kg	130[(i)(xi)]	130[(ii)(xi)]	130[(ii)(xi)]	10,000[(xiv)(xi)]	2

DETERMINAND	UNITS	WITHIN 600 mm COVER SYSTEM (GARDEN)	HARD STANDING AND >600 mm OF COVER	PUBLIC OPEN SPACE 300 mm COVER	PUBLIC OPEN SPACE > 300 mm	PATH-WAY
TPH C_{12}-C_{16} (aliphatic)	mg/kg	1000[xiv][xi]	1000[xiv][xi]	1000[xiv][xi]	10,000[xiv][xi]	1
TPH C_{16}-C_{21} (aliphatic)	mg/kg	1000[xiv][xi]	1000[xiv][xi]	1000[xiv][xi]	10,000[xiv][xi]	1
TPH C_{21}-C_{35} (aliphatic)	mg/kg					1
TPH C_5-C_7 (aromatic)	mg/kg	70[i][xi]	370[ii][xi]	370[ii][xi]	10,000[xiv][xi]	2
TPH C_7-C_8 (aromatic)	mg/kg	130[i][xi]	860[ii][xi]	860[ii][xi]	10,000[xiv][xi]	2
TPH C_8-C_{10} (aromatic)	mg/kg	34[i][xi]	47[ii][xi]	47[ii][xi]	10,000[xiv][xi]	2
TPH C_{10}-C_{12} (aromatic)	mg/kg	74[i][xi]	250[ii][xi]	250[ii][xi]	10,000[xiv][xi]	2
TPH C_{12}-C_{16} (aromatic)	mg/kg	140[i][xi]	1800[ii][xi]	1800[ii][xi]	10,000[xiv][xi]	1
TPH C_{16}-C_{21} (aromatic)	mg/kg	260[i][xi]	1900[ii][xi]	1900[ii][xi]	10,000[xiv][xi]	1
TPH C_{21}-C_{35} (aromatic)	mg/kg	1000[xiv][xi]	1900[ii][xi]	1900[ii][xi]	10,000[xiv][xi]	1
Asbestos	Fibres Volume Weight (%)	NFD	0.001%	NFD	0.001	4

Notes 1

NFD = No Fibres Detected

Asbestos will be screened visually on site by a qualified environmental consultant and where potential ACM is identified, representative samples will be subject to quantitative analysis of % volume by weight.

Should any ACM be identified within the soil matrices, further detailed % assessment would be required when the reported laboratory result exceeds the limit of detection for the analytical method at 0.01% by volume (weight).

Notes 2
Excludes matrices where free product is observed.

No viable exposure pathway beneath the hardstanding and cover system.

Notes 3
Main exposure pathways: 1 = soil ingestion, 2 = vapour inhalation (indoor), 3 = dermal contact and ingestion, 4 = dust inhalation.

Abbreviations: GAC = general assessment criteria, n = number of samples, MC = maximum concentration, N/A = Not Applicable (no exceedance of assessment criteria), Loc of MC = location of exceedances.

i. Value derived from LQM Suitable 4 Use Levels (S4ULs) for residential end use with plant uptake.
ii. Value derived from LQM Suitable 4 Use Levels (S4ULs) for residential end use without plant uptake – these levels used below 600 mm cover system within residential gardens as soils will be present within a residential setting yet soils will not be disturbed and garden plants will not reach these soils.
iii. Value derived from LQM Suitable 4 Use Levels (S4ULs) for public open space (POS) residential.
iv. Value derived from LQM Suitable 4 Use Levels (S4ULs) for public open space (POS) park – these levels used below 300 mm POS cover system as soils will not be disturbed by any future site users and exposure to these soils will be similar to a park end use.
v. Value derived from LQM Suitable 4 Use Levels (S4ULs) alongside assessment with WM3 to ensure that materials remaining on site do not exceed the WM3 toxicity criteria for hazardous waste.
vi. Value derived from Category 4 Screening Levels (C4SL) for residential land use with homegrown produce.
vii. Value derived from Category 4 Screening Levels (C4SL) for residential land use without homegrown produce.
viii. Value derived from Category 4 Screening Levels (C4SL) for public open space (POS) residential.
ix. Value derived from Category 4 Screening Levels (C4SL) for public open space (POS) park.
x. Mercury – based on elemental mercury.
xi. PAH and TPH levels used are for 1% SOM.
xii. Xylenes based on p-xylene (o-xylene 2600 mg/kg, m-xylene 3500 mg/kg) and is capped by its solubility.
xiii. Value derived from LQM Suitable 4 Use Levels (S4ULs) for residential end use with plant uptake due to the volatilisation risk.
xiv. BTEX is not SOM-related due to inhalation pathway.

5.2. PROCEDURE FOR PLACEMENT AND VALIDATION OF CHEMICALLY SUITABLE COVER SYSTEM

Rear Garden areas need to be backfilled with 450 mm chemically validated subsoil, with 150 mm topsoil overlaying this. Topsoil and subsoil are required to be confirmed as chemically suitable prior to placement.

The placement of 600 mm of clean material will be undertaken during the build phase works of the project.

Landscaped areas and POS need to be backfilled with 300 mm chemically validated subsoil, with 150 mm topsoil overlaying this. Topsoil and subsoil are required to be confirmed as chemically suitable prior to placement.

The placement of 450 mm of clean material will be undertaken during the build phase works of the project.

A geotextile break layer is required beneath all cover systems in front and rear garden areas.

Clean cover systems are to be placed in line with Kellen Homes drawings KH006-SA1-A and KHE-006-CSS01. The placement of subsoil and corresponding validation will be documented within the Garden Validation Letters (to be issued on completion of the contractor's works).

If proposed utilities are to be placed within the cover system, the clean cover should be placed prior to installation of these utilities.

If natural drift deposits are encountered, excavation can cease here.

E3P will collect photographic evidence of the placement of 150 mm of certified topsoil, 450 mm of subsoil and placement of geotextile membrane on completion of construction works. This element will also be checked by the Building Control Officer as part of the site completion prior to issuing a CML certificate.

The garden validation procedure is detailed in Table 5.3.

TABLE 5.3 GARDEN VALIDATION PROCEDURE

PROCEDURE	METHOD
Chemical Validation	Imported subsoils and topsoil will need to be chemically analysed to confirm suitability for use with the proposed cover system prior to installation and completion of the garden systems. If acceptable, the materials can be installed to the required depth; at this time, the plot will be deemed complete following a validation procedure by a suitable qualified engineer.
Trial Holes	Trial holes are deemed necessary for all rear gardens of plots, given that the 600 mm cover system and geotextile break layer will need to be placed on each plot during the build phase. Trial holes within front garden areas will be undertaken at 1 every ten plots, given that these are deemed as functional landscaping, to validate the correct installation of 450 mm cover and geotextile break layer. Areas of soft landscaping and POS will have a minimum of 1 trial hole per landscaped area, with additional trial holes undertaken every 1 per 50 m2, given that 450 mm cover systems are required in these areas.
Validation	E3P will attend the site and measure the thickness of the cover system, providing an assessment to the site manager whilst on site. Photographic evidence will be taken of the cover system, demonstrating the depth and materials which make up the cover system and the location of the trial hole in relation to the plot.
Validation Certificate	E3P will issue a plot-specific validation certificate to demonstrate that the required subsoil and topsoil have been placed in each garden, along with the chemical analysis.
Completion Report	Upon completion of all garden and landscaped areas within the development, a Completion Report will be issued providing the confirmation that all remediation requirements have been achieved.

Plate 5.1 provides an example of garden validation photographs required for each plot.

PLATE 5.1 EXAMPLE PLOT COVER SYSTEM VALIDATION

Plot No: 70		
Depth of Strata (m bgl)	0.00-0.15	Validated TOPSOIL
	0.15-0.60	Validated SUBSOIL

Depth of Cover System Materials

Depth of Cover System Materials

Depth of Cover System at Ground Level

Depth of Cover System in Relation to Plot

6. WATER PIPELINE RISK ASSESSMENT

Table 6.1 summarises the threshold concentrations that must not be exceeded within the remediated ground at pipeline depth for PE pipe works to be acceptable for the proposed development.

TABLE 6.1 PIPELINE SELECTION PE THRESHOLD CONCENTRATIONS

CONTAMINANT GROUP	PE-THRESHOLD
Total VOC	0.5
Total BTEX And MTBE	0.1
Total SVOCs (Excluding PAH and those substances marked with an *)	2
EC5-EC10 Aliphatic and Aromatic Hydrocarbons	2
EC10-EC16- Aliphatic and Aromatic Hydrocarbons	10
EC16-EC40 Aliphatic and Aromatic Hydrocarbons	500
Phenols (From SVOC Analysis)*	2
Cresols and Chlorinated Phenols (From SVOC Analysis)	2
Ethers*	0.5
Nitrobenzene*	0.5
Ketones*	0.5
Aldehydes*	0.5
Amines	Fail

APPENDIX I
LIMITATIONS

1. This report and its findings should be considered in relation to the terms of reference and objectives agreed between E3P and the Client as indicated in Section 1.2.

2. For the work, reliance has been placed on publicly available data obtained from the sources identified. The information is not necessarily exhaustive and further information relevant to the site may be available from other sources. When using the information it has been assumed it is correct. No attempt has been made to verify the information.

3. This report has been produced in accordance with current UK policy and legislative requirements for land and groundwater contamination which are enforced by the local authority and the Environment Agency. Liabilities associated with land contamination are complex and requires advice from legal professionals.

4. During the site walkover, reasonable effort has been made to obtain an overview of the site conditions. However, during the site walkover, no attempt has been made to enter areas of the site that are unsafe or present a risk to health and safety, are locked, barricaded, overgrown, or the location of the area has not been made known or accessible.

5. Access considerations, the presence of services and the activities being carried out on the site limited the locations where sampling locations could be installed and the techniques that could be used.

6. Site sensitivity assessments have been made based on available information at the time of writing and are ultimately for the decision of the regulatory authorities.

7. Where mention has been made to the identification of Japanese Knotweed and other invasive plant species and asbestos or asbestos-containing materials, this is for indicative purposes only and do not constitute or replace full and proper surveys.

8. The executive summary, conclusions and recommendations sections of the report provide an overview and guidance only and should not be specifically relied upon without considering the context of the report in full.

9. E3P cannot be held responsible for any use of the report or its contents for any purpose other than that for which it was prepared. The copyright in this report and other plans and documents prepared by E3P is owned by them and no such plans or documents may be reproduced, published or adapted without written consent. Complete copies of this may, however, be made and distributed by the Client as is expected in dealing with matters related to its commission. Should the Client pass copies of the report to other parties for information, the whole report should be copied, but no professional liability or warranties shall be extended to other parties by E3P in this connection without their explicit written agreement there to by E3P.

10. New information, revised practices or changes in legislation may necessitate the re-interpretation of the report, in whole or in part.

APPENDIX II
GLOSSARY

TERMS

ACM	Asbestos-containing material	**MMP**	Materials management plan
ADS	Acoustic design statement	**ND**	Not detected
AST	Above-ground storage tank	**NDP**	Nuclear density probe
BGS	British Geological Survey	**NMP**	Noise management plan
BSI	British Standards Institute	**NPSE**	The noise policy statement for England
BTEX	Benzene, toluene, ethylbenzene, xylenes	**NR**	Not recorded
CA	Coal Authority	**PAH**	Polycyclic aromatic hydrocarbon
CBR	California bearing ratio	**PCB**	Polychlorinated biphenyl
CIEH	Chartered Institute of Environmental Health	**PI**	Plasticity index
CIRIA	Construction Industry Research Association	**PID**	Photo ionisation detector
CLEA	Contaminated land exposure assessment	**POS**	Public open space
CML	Council of Mortgage Lenders	**PPE**	Personnel protective equipment
CoC	Contaminants of concern	**ProPG**	Professional practice guidance
CSM	Conceptual site model	**QA**	Quality assurance
DNAPL	Dense non-aqueous phase liquid (chlorinated solvents, PCB)	**SGV**	Soil guideline value
DWS	Drinking water standard	**SPH**	Separate-phase hydrocarbon
EA	Environment Agency	**SPT**	Standard penetration test
EQS	Environmental quality standard	**SVOC**	Semi-volatile organic compound
FFL	Finished floor level	**TPH**	Total and speciated petroleum hydrocarbon
GAC	General assessment criteria	**TPH CWG**	Total Petroleum Hydrocarbon (Criteria Working Group)
GL	Ground level	**UKWIR**	United Kingdom Water Infrastructure Risk
GSV	Gas screening value	**UST**	Underground storage tank
HCV	Health criteria value	**VCC**	Vibro-concrete column
ICSM	Initial conceptual site model	**VOC**	Volatile organic compound
LEL	Lower explosive limit	**VRSC**	Vibro-replacement stone columns
LMRL	Lower method reporting limit	**VSC**	Vibro-stone columns
LNAPL	Light non-aqueous phase liquid (petrol, diesel, kerosene)	**WHO**	World Health Organisation
MCV	Moisture condition value	**WRAP**	Waste and Resources Action Programme
MIBK	Methyl isobutyl ketone	**WTE**	Water table elevation

m	Metres	**ppm**	Parts per million
km	Kilometres	**mg/m^3**	Milligram per metre cubed
% v/v	Percent volume in air	**m bgl bgl**	Metres below ground level
mb	Millibars (atmospheric pressure)	**m bcl**	Metre below cover level
l/hr	Litres per hour	**mAOD**	Metres above ordnance datum (sea level)
µg/l	Micrograms per litre (parts per billion)	**kN/m^2**	Kilonewtons per metre squared
ppb	Parts per billion	**µm**	Micrometre
mg/kg	Milligrams per kilogram (parts per million)	**SSRT**	Site Specific Remediation Target
PSD	Particle Size Distribution	**DD**	Dry Density
CL:AIRE	Contaminated Land: Applications in Real Environments	**Mc**	Moisture Content
ρ	Bulk Density	**GPR**	Ground Penetrating Radar
NDP	Nuclear Density Probe	**FFL**	Finished Floor Level
LEL	Lower Explosive Limit	**UKWIR**	UK Water Industry Research
CIRIA	Construction Industry Research and Information Association	**LOD**	Limit of Detection

APPENDIX III
DRAWINGS

DRAWING 15-425-001 – SITE LOCATION PLAN

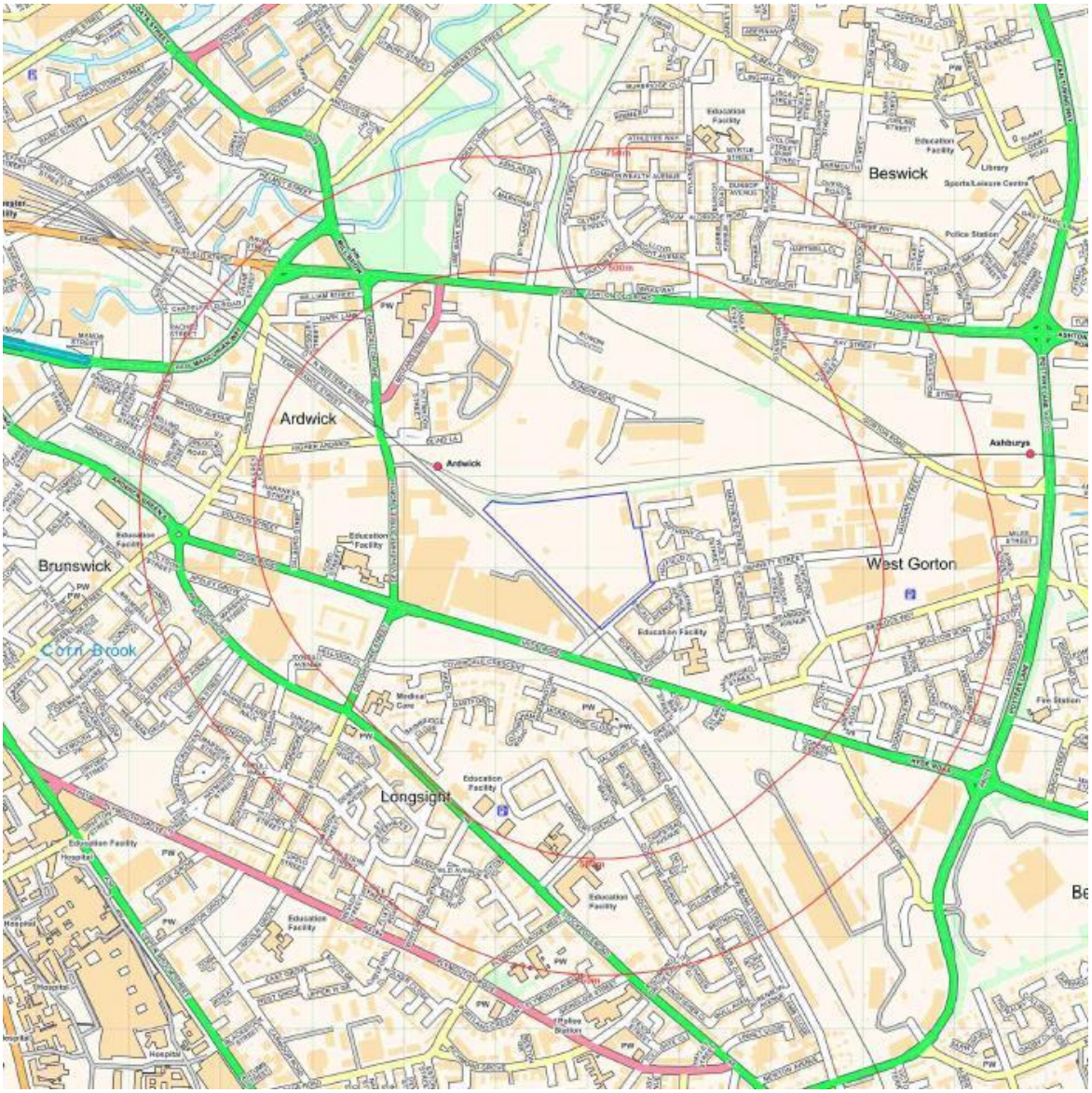

N

e3p

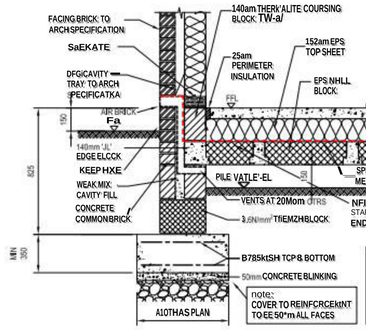

FLOOR SPANNING PARALLEL TO EXTERNAL WALL

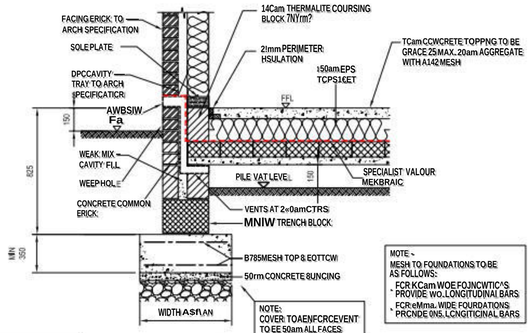

FLOOR SPANNING ONTO EXTERNAL WALL

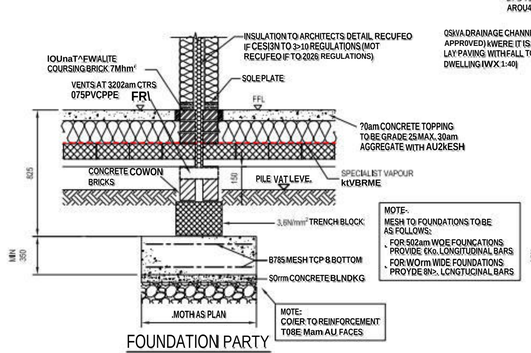

FOUNDATION PARTY WALL DETAIL

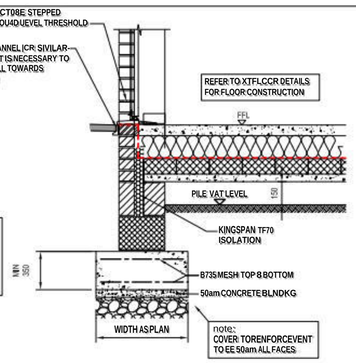

TYPICAL LEVEL THRESHOLD DETAIL

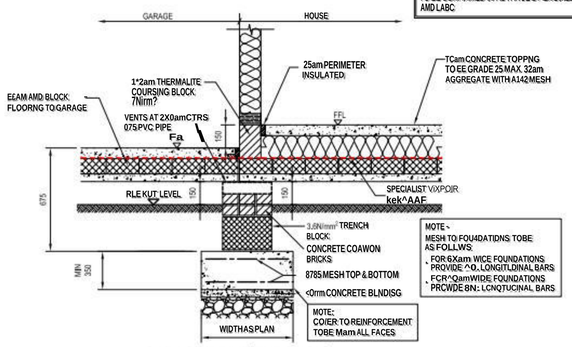

GARAGE/DRIVE THROUGH WALL TO HOUSE PARTITION

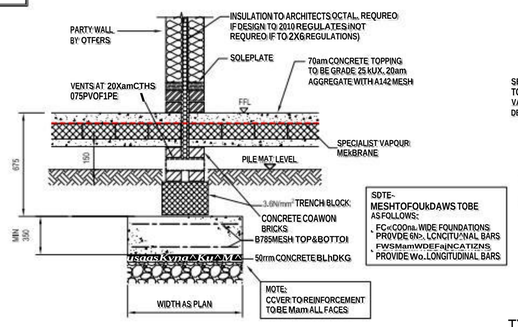

PARTY WALL TO GARAGE DETAIL

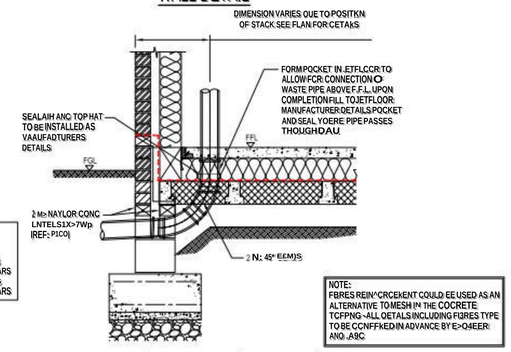

TYPICAL SERVICE CONNECTION DETAIL AT EXTERNAL WALL LOCATION

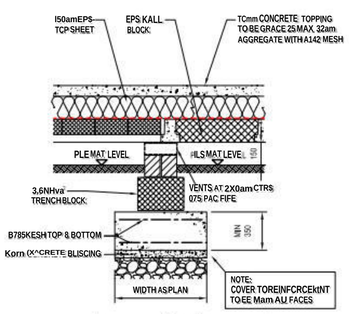

FLOOR SUPPORT AND SLEEPER WALL DETAIL

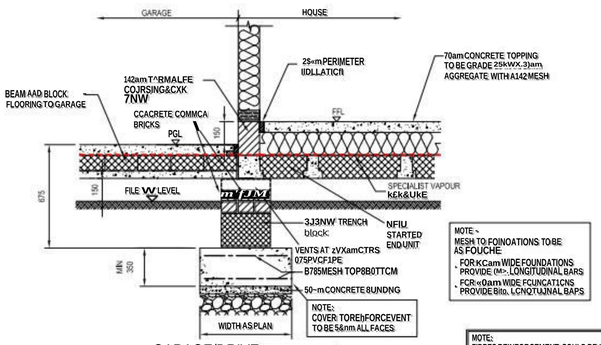

GARAGE/DRIVE THROUGH WALL TO HOUSE PARTITION (ALTERNATE FLOOR SPANS)

MOTE: FIBRES REINFORCEMENT COULD BE USED AS AN ALTERNATIVE TO MESH IN THE CONCRETE ^Cpping. au details Including fibres type TO BE 02NFIRMED IV ADVANCE BY ENGINEER ANO LABC

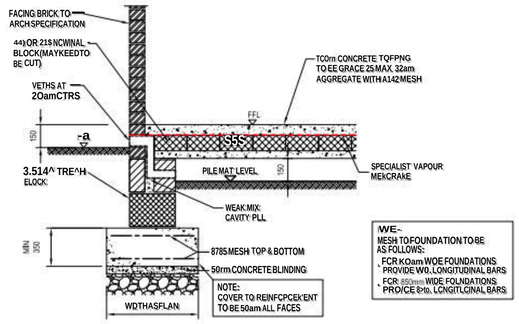

FLOOR SPANNING ONTO EXTERNAL (SINGLE LEAF) GARAGE WALL

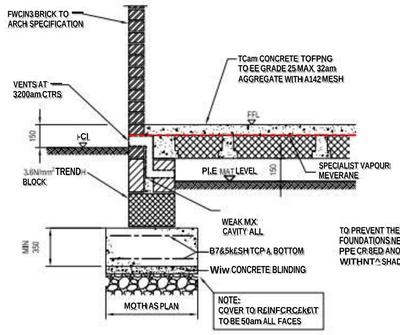

FLOOR SPANNING PARALLEL TO EXTERNAL (SINGLE LEAF) GARAGE WALL

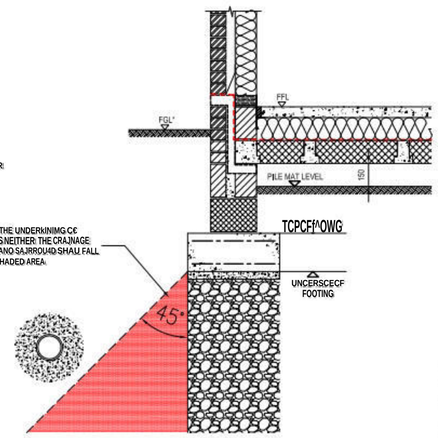

TYPICAL DETAIL SHOWING ACCEPTABLE ARRANGEMENT FOR DRAINAGE NEAR FOUNDATIONS

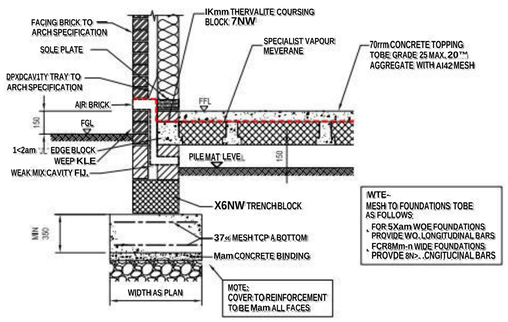

FLOOR SPANNING PARALLEL TO EXTERNAL (CAVITY) GARAGE WALL

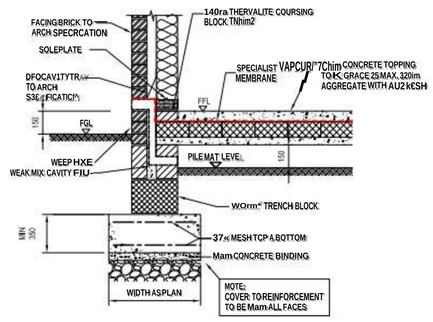

JETFLOOR SPANNING ONTO TO EXTERNAL (CAVITY) GARAGE WALL

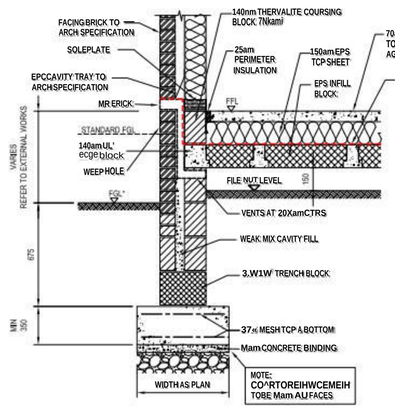

TYPICAL UNDERBUILD DETAIL

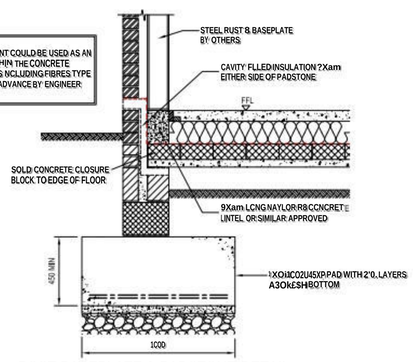

POST BASEPLATE & PADSTONE DETAIL EXTERNAL WALL

GENERAL NOTES

1. THS ORHW TO K READ IN OWJNCT.f< WITH AIL RELEVANT ENGINEERS, ARCHITECTS AND SPECIALISTS DRAr/INSS AND SPECIFEAT1CNS.
2. AU RELEVANT GIVENSCNS TO EE C3TA1NED1C1EC'ED AGAINST ARCHITECTS DRAWINGS AND BY SITE MEASUREMENT PRIOR TO ■ ~ COMMENCEMENT C* WORKS CR CREEPING DE VATERJAL&

   DO MOT SCALE FROM THIS CRAWKG. DISCREPANCIES BETWEEN THE DRAWINGS AND SITE CCNDITICNS TO BENOTIFEDTO THE ENGI'EER.
3. AU DPMs 8 DPCi AND WATERPROOFING' WEATHIR/NG DETAILS TOBE IN ACCORDANCE WITH ARCHITECTS DETAILS.
4. TT= CWRACTC** IS RESTO^BLE FOR THE LO3ATKA Of AU UMJERGROUM) SERMCES THAT MAY EXIST AND TO QOVERT THEV IT NECESSARY PRIC/I TO THE COKWNCELCNT C* THE fIORIS.
5. SETTING-OUT CF WALS TO BE IN ACCORDANCE WITH LATEST RELEVANT ARCHITECTS DRAWING.
6. MATERIALS OR TORKVArtSHIP NOT CC^APL-YI-I WITH T*€ENObEE^S DRAWINGS WTO SPECIFICATION SHALL BE CEEIED UNACCEPTABLE AMO RELCA'ED <RC*ISITE AND REP.ACE0 WITH VAORK CORRECTLY MANLFACTURED. DELIVERED AND ERECTED.

VIBRO STONE REPLACEMENT COQLUMNS

VSRC'S, WHERE USED, TO PROVIDE A MINIMUM GROUND BEARhG CAPACITY OF 150KWM³.

PLOTS TO BE VIBRO WITUN AREA OF TREE INFULENCE

GROUND TO BE REWORKED TO REMOVE ALL COHESIVE MATERIAL AND REPLACED WITH GRANULAR NOM4HRINKABLE SCIL TO DEPTHS IN UNE NTH NHBC SECTION 42~ FIGURE 2 SHOWN BELOW:

Figure 2 Foundations in non shrinkable soils overlying shrinkable soil

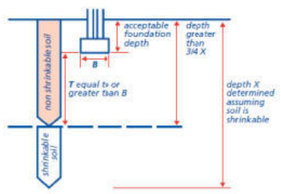

NOTE: AIRBRICK NOT TO BE INSTALLED BENEATH BEARING OF JETFLOOR BEAM

REV	DATE	DESCRPTIM	BY	CW	APP.
P6	27.:.T.2tc3	VCWeRtofc DETAIL UWATK)	S3	EG	Kce
P5	24/.L.KO3	SCREED FIBRES NOTE ADDED	EG	EG	Kce
P4	28-06-2023	VENT DEW UPDATED	EG	<Ce	KDB
n	I74)24tf3	PREUJNWY ISSUE	EQ	KCB	KC6
P2	^224023	PRaMNKRY^SUE	S3	<06	KDB
r1	01-02-2023	FRUMHARY ISSUE	EG	<09	Kce

CFAWIK STATUS: **PRELIMINARY**

CUBIT: KELLEN HOMES LIMITED

ABHITECT: KELLEN HOMES LIMITED

PRO.eCT: BENNETT STREET MANCHESTER

TITLE: VIBRO FOUNDATION DETAILS VOC MEMBRANE

STATUS	PROJECT No.	FTOJKT	CRK4kATCR	\\«(SYS)IEVH	(TYPE	RCXE	QRm/.V.G.UL	REV.
S2	222-176	BEN - AJP	-XX	-00	-DR-	S-	2010	P6

SCALE @ A1:	DESIGNED:	DRAWN:	C=2KEG	APPROVED:	ME:
1:20	K06	EG	KCB	KC6	JAN 2023

A jiiy consulting engineers
»,0151227 1462 R irfoigiajpltd.co.uk 91 Dale Street, L verpoal, L2 2ET

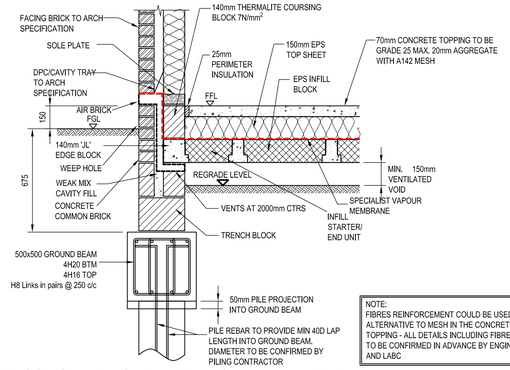

JETFLOOR SPANNING PARALLEL TO EXTERNAL WALL

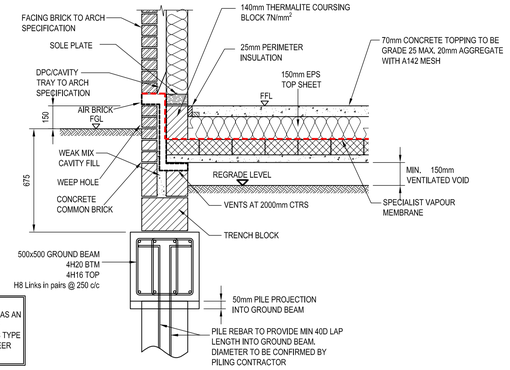

NOTE:
FIBRES REINFORCEMENT COULD BE USED AS AN ALTERNATIVE TO MESH IN THE CONCRETE TOPPING - ALL DETAILS INCLUDING FIBRES TYPE TO BE CONFIRMED IN ADVANCE BY ENGINEER AND LABC

JETFLOOR SPANNING ONTO EXTERNAL WALL

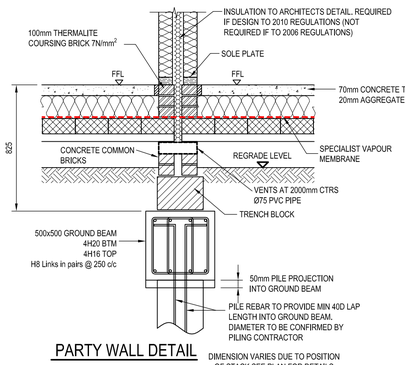

PARTY WALL DETAIL

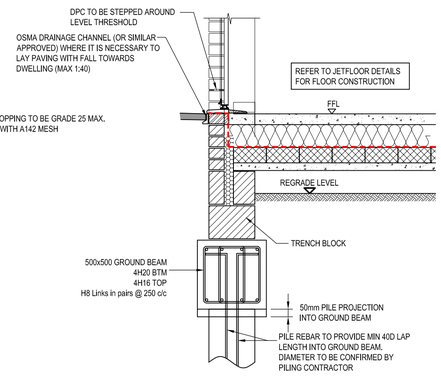

TYPICAL LEVEL THRESHOLD DETAIL WITH JETFLOOR CONSTRUCTION

GENERAL NOTES

1. THIS DRAWING TO BE READ IN CONJUNCTION WITH ALL RELEVANT ENGINEERS, ARCHITECTS AND SPECIALISTS DRAWINGS AND SPECIFICATIONS.
2. ALL RELEVANT DIMENSIONS TO BE OBTAINED/ CHECKED AGAINST ARCHITECTS DRAWINGS AND BY SITE MEASUREMENT PRIOR TO THE COMMENCEMENT OF WORKS OR ORDERING OF MATERIALS.

   -DO NOT SCALE FROM THIS DRAWING. DISCREPANCIES BETWEEN THE DRAWINGS AND SITE CONDITIONS TO BE NOTIFIED TO THE ENGINEER.
3. ALL DPM's & DPC's AND WATERPROOFING/ WEATHERING DETAILS TO BE IN ACCORDANCE WITH ARCHITECTS DETAILS.
4. THE CONTRACTOR IS RESPONSIBLE FOR THE LOCATION OF ALL UNDERGROUND SERVICES THAT MAY EXIST AND TO DIVERT THEM IF NECESSARY PRIOR TO THE COMMENCEMENT OF THE WORKS.
5. SETTING-OUT OF WALLS TO BE IN ACCORDANCE WITH LATEST RELEVANT ARCHITECT'S DRAWING.
6. MATERIALS OR WORKMANSHIP NOT COMPLYING WITH THE ENGINEERS DRAWINGS AND SPECIFICATION SHALL BE DEEMED UNACCEPTABLE AND REMOVED FROM SITE AND REPLACED WITH WORK CORRECTLY MANUFACTURED, DELIVERED AND ERECTED.

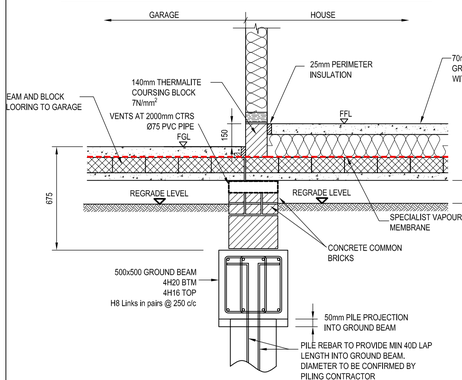

GARAGE/DRIVE THROUGH WALL TO HOUSE PARTITION

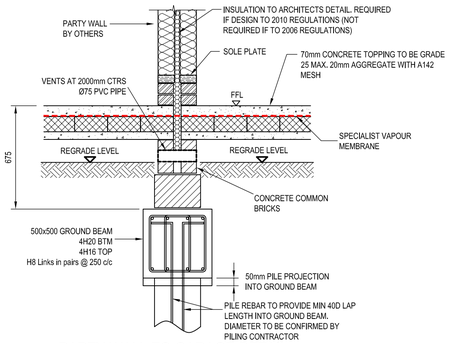

PARTY WALL TO GARAGE DETAIL

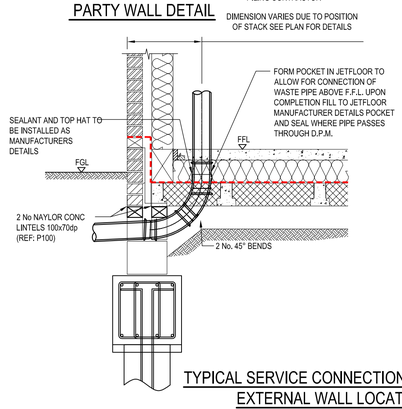

NOTE:
FIBRES REINFORCEMENT COULD BE USED AS AN ALTERNATIVE TO MESH IN THE CONCRETE TOPPING - ALL DETAILS INCLUDING FIBRES TYPE TO BE CONFIRMED IN ADVANCE BY ENGINEER AND LABC

TYPICAL SERVICE CONNECTION DETAIL AT EXTERNAL WALL LOCATION

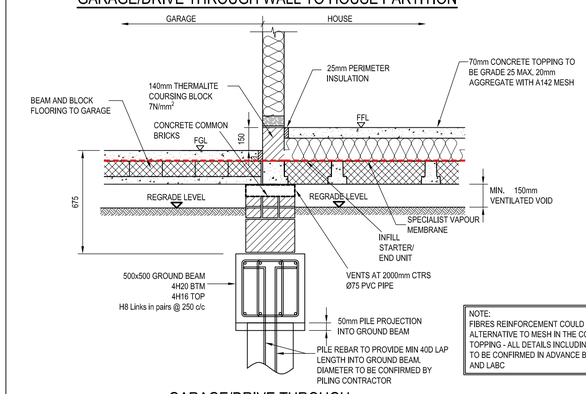

GARAGE/DRIVE THROUGH WALL TO HOUSE PARTITION (ALTERNATE FLOOR SPANS)

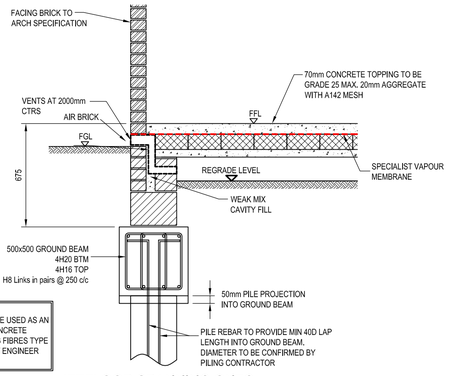

NOTE:
FIBRES REINFORCEMENT COULD BE USED AS AN ALTERNATIVE TO MESH IN THE CONCRETE TOPPING - ALL DETAILS INCLUDING FIBRES TYPE TO BE CONFIRMED IN ADVANCE BY ENGINEER AND LABC

JETFLOOR SPANNING ONTO EXTERNAL (SINGLE LEAF) GARAGE WALL

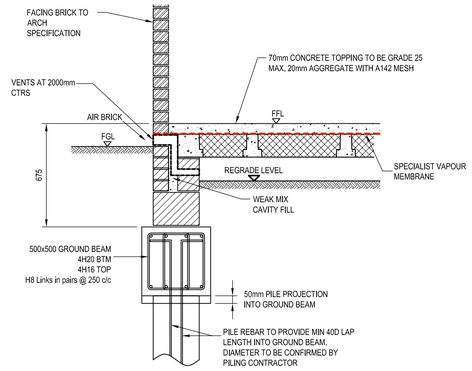

JETFLOOR SPANNING PARALLEL TO EXTERNAL (SINGLE LEAF) GARAGE WALL

NOTE:
FIBRES REINFORCEMENT COULD BE USED AS AN ALTERNATIVE TO MESH IN THE CONCRETE TOPPING - ALL DETAILS INCLUDING FIBRES TYPE TO BE CONFIRMED IN ADVANCE BY ENGINEER AND LABC

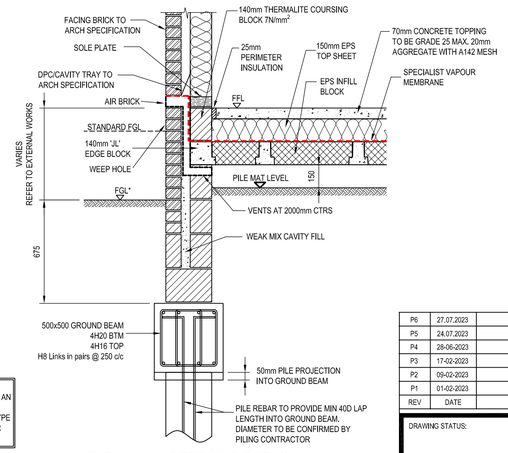

TYPICAL UNDERBUILD DETAIL

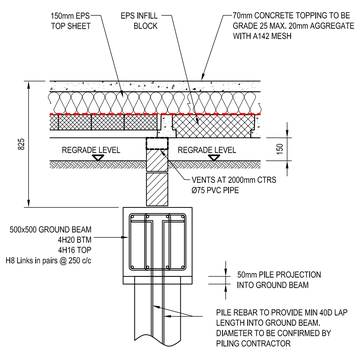

FLOOR SUPPORT AND SLEEPER WALL DETAIL

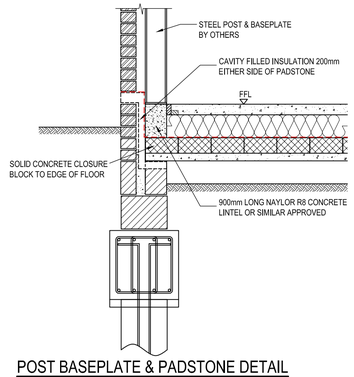

POST BASEPLATE & PADSTONE DETAIL EXTERNAL WALL

REV	DATE	DESCRIPTION	BY	CHK	APP
P6	27.07.2023	MEMBRANE DETAIL UPDATED	EG	EG	KOB
P5	24.07.2023	SCREED FIBRES NOTE ADDED	EG	EG	KOB
P4	28-06-2023	VENT DETAIL UPDATED	EG	KOB	KOB
P3	17-02-2023	PRELIMINARY ISSUE	EG	KOB	KOB
P2	09-02-2023	PRELIMINARY ISSUE	EG	KOB	KOB
P1	01-02-2023	PRELIMINARY ISSUE	EG	KOB	KOB

DRAWING STATUS: **PRELIMINARY**

CLIENT: KELLEN HOMES LIMITED

ARCHITECT: KELLEN HOMES LIMITED

PROJECT: BENNETT STREET MANCHESTER

TITLE: PILED FOUNDATION DETAILS VOC MEMBRANE

STATUS:	PROJECT No.	PROJECT	ORIGINATOR	VOL/SYS	LEVEL	TYPE	ROLE	DRAWING No.	REV:
S2	222-176	BEN -	AJP -	XX -	00 -	DR -		S - 2011	P6

SCALE @ A1:	DESIGNED:	DRAWN:	CHECKED:	APPROVED:	DATE:
1:20	KOB	EG	KOB	KOB	JAN 2023

AJP consulting engineers
0151 227 1462 info@ajpltd.co.uk 1 Dale Street, Liverpool, L2 2ET

BENNETT STREET - COVER SYSTEM SECTIONS

Rear Gardens and Specific Front Garden Areas as specified on Drawing Number KH006-SA1 - Rev A

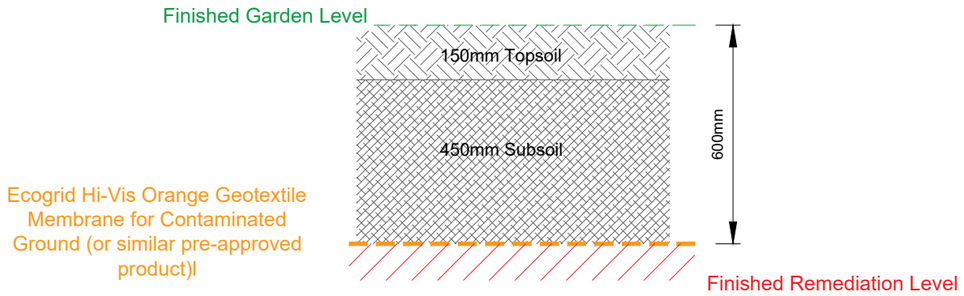

POS and Amenity Space Areas as specified on Drawing Number KH006-SA1 - Rev A

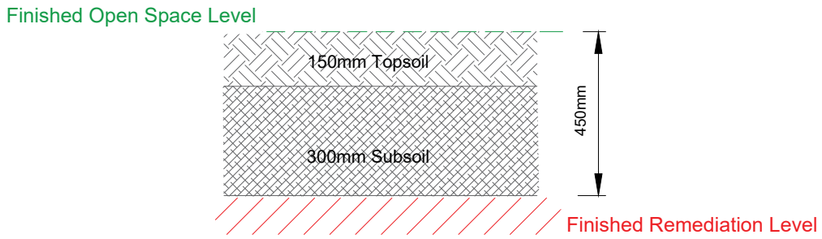

Front Garden Areas as specified on Drawing Number KH006-SA1 - Rev A

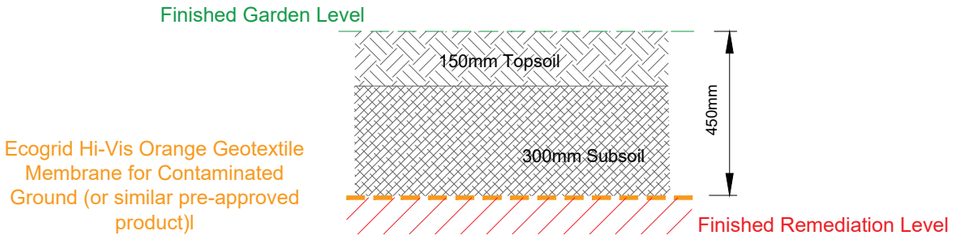

Revision	Date	Amendment	Initials
-	-	-	-

Drawing Number
KHE-006-CSS01

Drawing Title
Cover System Sections

Revision -	Scale @ A3 NTS
Drawn By LC	Date 08.08.2023
Checked by SG	Date Checked 08.08.2023

1st Floor, 103 Dalton Avenue, Birchwood Park, Warrington WA3 6YE
T: 01925 363108 W: www.kellenhomes.com
KELLEN HOMES

0 2.5 5 10 15 25 m
SCALE BAR 1:500

Z:\006 Bennett Street Manchester\02. Engineers\5. Engineering\6. Internal Drawings\6.0 Soil Areas\Garden Sections.dwg

Area Names	Area Size (m²)	Subsoil Volume (m³)	Topsoil Volume (m³)
Gardens (600mm) plus geotextile membrane	8915	4012	1337
Gardens (450mm) plus geotextile membrane	4752	1426	713
POS/Amenity Space (450mm)	5650	1695	848
TOTAL	19317	7132	2898

Revision	Date	Amendment	Initials
A	08.08.2023	Updated to Rev T of Planning Layout	ASB

Development
BENNETT STREET

Location
MANCHESTER

Marketing Name
-

Drawing Title
SOIL AREAS

Job No.	Drawing No.
KH006	**SA1**
Revision: **A**	Scale @ A1: 1:500
Drawn By: LC	Date: 11.01.23
Checked by: ASB	Date Checked: 11.01.23

1st Floor, 103 Dalton Avenue, Birchwood Park, Warrington WA3 6YE
T: 01925 363108 W: www.kellenhomes.com
KELLEN HOMES

Z:\006 Bennett Street Manchester\02. Engineers\5. Engineering\6. Internal Drawings\6.0 Soil Areas\Bennett Street Soil Areas Rev A.dwg

APPENDIX IV
TECHNICAL DATA

Technical support: +44 (0) 333 202 6800

Date Published: 21/07/2023

Visqueen Ultimate HC BLOK

Features and benefits

- Agrement certified - third party accreditation
- Complies with NHBC Foundation's NF94 guidance for use in Type A and Type B membrane locations
- Complies with CIRIA C748:2014 - industry standard for volatile organic compounds (VOC) protection
- Complies with the methane gas transmission rate, mass per unit area and thickness requirements of BS 8485:2015 + A1:2019 - industry standard for methane and carbon dioxide protection
- Flexible - easy to detail and install on site
- Multi functional - also acts as a radon and damp proof membrane
- Dual jointing methods - lap joints can be taped or heat welded

Product description

Visqueen Ultimate HC Blok is a 0.5mm thick, chemically resistant co-extruded volatile organic compound barrier and gas barrier. It is coloured gold on the upper surface and white on the reverse. The product is supplied in single wound rolls (not folded), 2.44m x 41m.

Approvals and standards

- Third party accreditation (BDA certificate BAF-18-051-P-A-UK)
- Complies with NHBC Foundation's NF94 guidance for use in Type A and Type B membrane locations
- Complies with CIRIA C748:2014
- Complies with the methane gas transmission rate, mass per unit area and thickness requirements of BS 8485:2015 + A1:2019
- Suitable for all Characteristic Gas Situation (CS) ground gas regimes
- Conforms to the specification requirements of NHBC Amber 1 and Amber 2 applications
- Conforms to the specification requirements of BR 211:2023
- CE Mark EN 13967:2012
- Quality Management System ISO 9001:2015
- Occupational Health and Safety System ISO 45001:2018
- Environmental Management System ISO 14001:2015

Usage

Visqueen Ultimate HC Blok is suitable for use in all types of buildings to prevent the ingress of harmful levels of volatile organic compounds (VOCs), methane, carbon dioxide and radon. The barrier can be positioned above or below a concrete ground floor slab or above a precast suspended segmental ground floor system, e.g. beam and block floor.

The barrier also acts as a damp proof membrane.

Radon, carbon dioxide, methane, and VOC protection – NHBC NF94 guidance:
Visqueen Ultimate HC Blok when installed with either taped or welded joints (welded only for VOC protection) complies with NHBC Foundation's NF94 publication, Hazardous ground gas - an essential guide for housebuilders, in Type A membrane locations in precast suspended segmental subfloors and reinforced cast in situ concrete floor slabs (ground bearing, suspended or raft). Visqueen Ultimate HC Blok also complies with this guidance when installed with welded joints in Type B membrane locations in reinforced cast in situ concrete floor slabs (ground bearing, suspended or raft). For site or zone characteristic gas situations of CS4 and above, contact Visqueen Technical Services.

The product is not intended for use where there is a risk of hydrostatic pressure.

System components

- Visqueen Ultimate Double Sided Jointing Tape, 100mm x 15m
- Visqueen GR Lap Tape, 150mm x 10m
- Visqueen Ultimate Top Hat Units
- Visqueen Preformed Units
- VisqueenPro Detailing Strip, 300mm x 10m, 500mm x 10m

Find your local stockist

Heanor Gate Road, Heanor, Derbyshire, DE75 7RG
+44 (0) 333 202 6800 I enquiries@visqueen.com I www.visqueen.com

Visqueen Ultimate HC BLOK

Storage and handling

Visqueen Ultimate HC Blok should be stored horizontally, under cover in its original packaging.

Care should be taken when handling the product in line with current manual handling regulations.

Preparation

Visqueen Ultimate HC Blok should be installed on a smooth continuous surface free from irregularities such as voids or protrusions e.g. grouted beam and block floor, 50mm thick sand blinding, or smooth concrete blinding.

The membrane can be cut with a sharp retractable safety knife or robust scissors.

Installation

Visqueen Ultimate HC Blok should be loose laid on the substrate with the gold side up so as to avoid sunlight glare.

The barrier should be clean and dry at the time of jointing. It should be overlapped by at least 150mm, bonded with Visqueen Ultimate Double Sided Jointing Tape and sealed with Visqueen GR Lap Tape. Alternatively lap joints can be heat welded to achieve an effective seal. The overlap in the barrier is typically 100mm and when hand welding, a 35mm weld is normally achieved. When hand welding, a roller must be used.

Airtight seals should be formed around all service entry points. Visqueen Ultimate Preformed Top Hat Units should be used for sealing service entry pipes. The base of the top hat and the upstand should be bonded using Visqueen Ultimate Double Sided Jointing Tape and sealed with Visqueen GR Lap Tape. The upstand should be secured with the supplied jubilee clip. Alternatively VisqueenPro Detailing Strip can be used to seal service entry points. The upstand should be secured with a jubilee clip.

Forming an effective barrier to gases may give rise to complex three-dimensional detailing where, it is recommended Visqueen Ultimate Preformed Units are used e.g. corners. Alternatively VisqueenPro Detailing Strip can be used to seal awkward junctions.

If the barrier is punctured or perforated a patch of the same material should be lapped at least 150mm beyond the limits of the puncture and bonded with Visqueen Ultimate Double Sided Jointing Tape and sealed with Visqueen GR Lap Tape. Alternatively a patch can be formed using VisqueenPro Detailing Strip and lapped at least 150mm beyond the extents of the puncture.

Long periods of exposure to ultraviolet light will reduce the effectiveness of the membrane. The membrane should be covered by a protective layer immediately after installation to prevent damage from following trades, ultraviolet light, etc. Care should be taken to ensure that the membrane is not punctured, stretched or displaced when applying a screed or final floor covering. A minimum thickness of 50mm screed is recommended. When reinforced concrete is to be laid over the barrier the wire reinforcements and spacers must be prevented from puncturing the barrier. Where there is a high risk of potential damage, the barrier should be covered with Visqueen TreadGUARD protection, screed, or other approved protection material before positioning the reinforcement.

Usable temperature range

It is recommended that Visqueen Ultimate HC Blok and all associated system components should not be installed below 5°C.

Additional information

When used in accordance with CIRIA C748:2014 or BS8485:2015 + A1:2019, a subfloor ventilation system or pressure relief maybe required
To assist build sequencing, Visqueen Ultimate Gas DPC is available for gas protection through the wall constructions.
For suspended beam and block floor detailing see HC-01
Visqueen Ultimate Preformed Top Hat Units should be used at service pipe penetrations see HC-51
For internal and external corners Visqueen Ultimate Preformed Corner Units are available see PFU-553
To seal around steel columns use VisqueenPro Detailing Strip see HC-52
For additional detailing information, contact Visqueen Technical Services +44 (0) 333 202 6800.

The information in this datasheet was correct at the time of publication. It is the user's responsibility to obtain the latest version of the datasheet as it is updated on a regular basis. The information contained in the latest datasheet supersedes all previously published editions.

Heanor Gate Road, Heanor, Derbyshire, DE75 7RG
+44 (0) 333 202 6800 I enquiries@visqueen.com I www.visqueen.com

Visqueen Ultimate HC BLOK

Property	Test method	Units	Criteria	Result	
Colour				Gold/white	
Weight		kg		49	
Length	EN 1848-2	m	-0/+10%	41	
Width	EN 1848-2	m	-0/+10%	2.44	
Thickness	EN 1849-2	mm	+/-10%	0.5	
BS 8485 and C748 physical test results		Units	Criteria	Result	
Puncture	BS EN ISO 12236:2006	N	MDV	1640	
Impact resistance Method A hard surface	EN 12691	mm	MDV	200	
Impact resistance Method B soft surface	EN 12691	mm	MDV	1250	
Tensiles yield strength MD 1	ASTM D4885-01	kN/m	MDV	5.1	
Tensiles yield strength CD 1	ASTM D4885-01	kN/m	MDV	4.91	
Yield elongation MD 1	ASTM D4885-01	%	MDV	76	
Yield elongation CD 1	ASTM D4885-01	%	MDV	62	
Tear resistance - trouser method A - MD	BS ISO 34-1	kN/m	MDV	60.2	
Tear resistance - trouser method A - CD	BS ISO 34-1	kN/m	MDV	66.1	
Tear resistance - angle method B - MD	BS ISO 34-1	N	MDV	48.7	
Tear resistance - angle method B - CD	BS ISO 34-1	N	MDV	49.6	
1 - this is at yield and not break as the equipment used was not strong enough to break the membrane					
BS 8485 - Methane testing	Test method	Units	Criteria	Result	
Methane gas transmission rate (unjointed)	ISO 15105-1	ml/m^2/day/atm	<40	1.3	
Methane gas transmission rate (welded joint)	ISO 15105-1	ml/m^2/day/atm	<40	24	
Carbon dioxide gas transmission rate	ISO 15105-1	ml/m^2/day/atm	<40	8.3	
C748:2014 - Permeation vapour tests - 100% concentration		Criteria	ml/m^2/d	mg/m^2/d	mg/m^2/hr
Benzene	ISO 15105-2	MDV	0.08	70	2.92
Toluene	ISO 15105-2	MDV	0.09	78.5	3.27
Ethyl benzene	ISO 15105-2	MDV	0.11	93.8	3.91
m,p xylene	ISO 15105-2	MDV	0.01	6.7	0.28
Hexane	ISO 15105-2	MDV	gas	2.6	0.11
Vinyl chloride	ISO 15105-2	MDV	0	6.4	0.27
Tetrachloroethene (PCE)	ISO 15105-2	MDV	0	3.2	0.13
Trichloroethene (TCE)	ISO 15105-2	MDV	solid	0.3	0.01
Naphthalene	ISO 15105-2	MDV	0.03	19.7	0.82
C748:2014 - Chemical immersion testing		weight %	Thickness %	Tensiles/elongation	
Pass is achieved if the aged membrane is within 25% of the fresh sample					
Benzene	EN 14414	Pass	Pass	Pass	
Toluene	EN 14414	Pass	Pass	Pass	
Ethyl benzene	EN 14414	Pass	Pass	Pass	
(m,p, and o) xylene	EN 14414	Pass	Pass	Pass	
Hexane	EN 14414	Pass	Pass	Pass	

Heanor Gate Road, Heanor, Derbyshire, DE75 7RG
+44 (0) 333 202 6800 I enquiries@visqueen.com I www.visqueen.com

Visqueen Ultimate HC BLOK

Property	Test method	Units	Criteria	Result	
Vinyl chloride	EN 14414	Pass	Pass	Pass	
Tetrachlororthene	EN 14414	Pass	Pass	Pass	
Trichloroethene	EN 14414	Pass	Pass	Pass	
Naphthalene	EN 14414	Pass	Pass	Pass	
CE Marking to EN13967 Type A					
Characteristic	Test method	Units	Criteria	Result	
Tensile strength - MD	EN 12311	N/mm^2	MDV	32.8	
Tensile strength - CD	EN 12311	N/mm^2	MDV	33.1	
Tensile elongation - MD	EN 12311	%	MDV	699	
Tensile elongation - CD	EN 12311	%	MDV	723	
Joint strength	EN 12317-2	N	MDV	265	
Watertightness 2kPa	EN 1928	-	Pass/Fail	Pass	
Resistance to impact	EN 12691	mm	>MLV	200	
Durability watertightness after heat ageing	EN 1296	-	Pass/Fail	Pass	
Durability watertightness against chemicals	EN 1847	-	Pass/Fail	Pass	
Resistance to tearing (nail shank) CD	EN 12310-1	N	MDV	245	
Resistance to tearing (nail shank) MD	EN 12310-1	N	MDV	270	
Water vapour transmission - resistance	EN 1931	MNs/g	MDV	1034	
Water vapour transmission - permeability	EN 1931	$g/m^2/d$	MDV	0.13	
Radon permeability	Sp Method 3873	m^2/s	MDV	$<1.5 \times 10^{-12}$	

Health and safety information

Refer to the Visqueen Ultimate HC Blok safety datasheet (SDS).

Heanor Gate Road, Heanor, Derbyshire, DE75 7RG
+44 (0) 333 202 6800 I enquiries@visqueen.com I www.visqueen.com

Visqueen Ultimate HC BLOK

About Visqueen

The Visqueen name has long been recognised as one of the leading manufacturers of high quality advanced membrane technologies and design based solutions by specifiers, distributors, builders merchants and contractors throughout the UK and Europe.

For further guidance on the Visqueen services shown below, please refer to the relevant section of the Visqueen website (www.visqueen.com) or contact Visqueen Technical Services on +44 (0) 333 202 6800 or enquiries@visqueen.com

Complete Range, Complete Solution

Structural Waterproofing | Gas Protection | Damp Proof Membrane | Tapes | Damp Proof Course | Stormwater | Vapour Control

Visqueen Technical Support

Visqueen combine an extensive product portfolio with industry leading levels of service and support which includes guidance over the phone, bespoke CAD drawings to help with complex detailing, electronic NBS specifications and access to a dedicated team of highly knowledgeable and experienced field based Technical Support Managers.

Visqueen Technical Support is available to all our customers including architects, specifiers, distributors, builders merchants, contractors and end users. All of our technical team have been awarded the industry recognised qualification Certificated Surveyor in Structural Waterproofing (CSSW).

Visqueen CPD Seminars

The Visqueen Continuing Professional Development (CPD) Seminars provide up-to-date information on changes within Building Regulations/Building Standards and nationally recognised industry guidance affecting damp proofing, water vapour control, hazardous ground gas protection and below ground structural waterproofing.

The one hour seminars have been produced for design specialists within the construction sector and are delivered by our team of Technical Support Managers.

Visqueen PI designs and special projects

From initial design to the completed project, Visqueen are with you every step of the way. Whether it be hazardous ground gas protection and/or below ground waterproofing protection employing barrier, structurally integral or drained systems, Visqueen can offer professional indemnity (PI) insurance for bespoke Visqueen design solutions.

Visqueen Technical Support Managers work with all stakeholders to provide cost effective Visqueen solutions offering complete peace of mind throughout the construction phase and beyond.

Visqueen Training Academy

Based at our manufacturing facility in Derbyshire, the Visqueen Training Academy is available to support Visqueen customers throughout the UK by providing a wide range of both theory and practical skills related training.

Courses include one day product awareness training for our distributors and builders merchants to help them in their day-to-day jobs, through to intensive three day courses giving detailed hands-on training in the practical skills required for safe and robust product installation.

Heanor Gate Road, Heanor, Derbyshire, DE75 7RG
+44 (0) 333 202 6800 I enquiries@visqueen.com I www.visqueen.com

GROUND GAS PROTECTION
GP® TITANFLEX®
TECHNICAL DATA SHEET

JUTA | TITANTECH®

GP® TITANFLEX®

GP® TITANFLEX® gas and hydrocarbon barrier is a multi-layer, polyethylene membrane. GP® TITANFLEX® is specifically designed, manufactured, tested and certified to perform as a methane, carbon dioxide, radon ground gas, VOC, Air moisture and hydrocarbon protection system.

Thickness	0.5 mm
Width	2 m
Length	50 m
Weight	500 g/m^2

TITANTECH®

For developers of brownfield and contaminated sites the TITANTECH® family of products represent a major step forward in safeguarding projects against gaseous and chemical contamination.

GP® TITANFLEX® complies with the latest codes of practice as published by BRE, CIRIA (C748) and BSI (BS8485:2015). Suitable for use as ground gas/hydrocarbon protection for NHBC, Green, Amber 1, Amber 2 and Red site characterisations.

Handling

Roll weights can be in excess of 20kg and hence appropriate care and equipment is required for unloading and handling.

Storage

Rolls of GP® TITANFLEX® should be stored on stable/level ground and stacked not more than five rolls high, with no other material stacked on top. The rolls can be stored outdoors when packaged, but should be protected from exposure to UV.

Installation

GP® TITANFLEX® should be installed in accordance with the product installation guidelines, and in accordance with best practice.

BBA

CE UKCA

GROUND GAS PROTECTION
GP® TITANFLEX®
TECHNICAL DATA SHEET

GP® TITANFLEX®

Feature	Characteristics	Test Method	GP® TITANFLEX®
Physical Properties	Thickness	EN 1849-2	0.5 mm
	Width	EN 1849-2	2 m
	Length	EN 1849-2	50 m
	Weight	EN 1849-2	500 g/m^2
Hydraulic Press	Water Vapour Transmission Rate	EN 1931	0.11 - 0.18 g/m^2/day
	Water Tightness (60 kPa)	EN 1928	Pass
	Water Tightness (196 kPa - 20 m Water Head) (Basement Application)	EN 1928	Pass
Mechanical Properties	Resistance to Static Load	EN 12730-B	≥ 20 kg
	Puncture Resistance	EN 12236	≥ 2.0 kN
	Tensile Strength (MD)	EN 12311-1	> 550 N/50mm
	Tensile Strength (CMD)	EN 12311-1	> 400 N/50mm
	Tensile Elongation (MD/CMD)	EN 12310-1	> 550 %
	Tear Resistance (MD/CMD)	EN 12310-1	> 300 N
	Resistance to Impact	EN 12691-B	650 mm
	Reaction to Fire	EN 13501-1	E Class
	Resistance to Artificial Ageing	EN 1296/EN 1928	Pass
	Resistance to Chemicals	EN 1296/EN 1928	Pass
Compliance and Certification	CE Mark - EN13967:2012		
	NHBC Standards Compliant		
	CIRIA C748 Compliant		
	BS 8485:2015 Compliant		
Vapour Permeability 100% Concentration	Transmission Rate of Benzene	EN ISO 15105-2	< 3.6 mg/m^2/day
	Transmission Rate of Toluene	EN ISO 15105-2	< 13.8 mg/m^2/day
	Transmission Rate of Ethyl Benzene	EN ISO 15105-2	< 2.7 mg/m^2/day
	Transmission Rate of Xylenes (M,P,O)	EN ISO 15105-2	< 7.7 mg/m^2/day
	Transmission Rate of Hexane	EN ISO 15105-2	< 0.6 mg/m^2/day
	Transmission Rate of Vinyl Chloride	EN ISO 15105-2	< 0.05 mg/m^2/day
	Transmission Rate of Trichloroethene (TCE)	EN ISO 15105-2	< 54.7 mg/m^2/day
	Transmission Rate of Tetrachloroethene (PCE)	EN ISO 15105-2	< 26.2 mg/m^2/day
	Transmission Rate of Naphthalene	EN ISO 15105-2	< 0.0006 mg/m^2/day
	Transmission Rate of CIS-1,2-Dichloroethylene	EN ISO 15105-2	< 1.1 mg/m^2/day
Gas Permeability	Methane Permeability	EN ISO 15105-1	0.13 ml/m^2/day/atm
	Methane Permeability (Jointed)	EN ISO 15105-1	1.00 ml/m^2/day/atm
	Carbon Dioxide Permeability	EN ISO 15105-1	3.01 ml/m^2/day/atm
	Vinyl Chloride Gas Permeability	EN ISO 15105-1	0.04 ml/m^2/day/atm
	Radon Permeability	K124/02/95	1.0 x 10^{-12} m^2/S

GP® TITANFLEX®

Feature	Characteristics	Test Method	GP® TITANFLEX®
Durability and Chemical Resistance	Chemical Resistance - Sulfuric ACID (10% Solution of Sulfuric Acid (H_2SO_4)) 50° For 56 Days	EN 14414-A	TENSILE STRENGTH RETAINED 100%
			RESULT - PASS
	Chemical Resistance - BASIC (Calcium Hydroxide Saturated Suspension) 50° For 56 Days	EN 14414-B	TENSILE STRENGTH RETAINED 100%
			RESULT - PASS
	Chemical Resistance - SOLVENTS (35% Diesel, 35% Paraffin, 30% Oil Hd3O (Vol)) 50° For 56 Days	EN 14414-C	TENSILE STRENGTH RETAINED >80%
			RESULT - PASS
	Chemical Resistance - SYNTHETIC LEACHATE (Mixture of 14 Acids, Chlorides, Sulphates & Phosphates) 50° For 56 Days	EN 14414-D	TENSILE STRENGTH RETAINED 100%
			RESULT - PASS
	Resistance to Leaching - HOT WATER (Deionised Water) 50° For 56 Days	EN 14415-A	TENSILE STRENGTH RETAINED 100%
			RESULT - PASS
	Resistance to leaching - AQUEOUS ALKALINE (Saturated Calcium Hydroxide) 50° For 56 Days	EN 14415-B	TENSILE STRENGTH RETAINED 100%
			RESULT - PASS
	Resistance to Leaching - ORGANIC ALCOHOL (30% Methanol, 30% Isopropanol, 40% Glycol) 50° For 56 Days	EN 14415-C	TENSILE STRENGTH RETAINED 100%
			RESULT - PASS
	Chemical Resistance - BENZENE - 100% Saturated Concentration	EN 14414-D (MOD)	TENSILE STRENGTH RETAINED 95% (MD), 102% (CMD)
			RESULT - PASS
	Chemical Resistance - TOLUENE - 100% Saturated Concentration	EN 14414-D (MOD)	TENSILE STRENGTH RETAINED 94% (MD), 91% (CMD)
			RESULT - PASS
	Chemical Resistance - ETHYL BENZENE - 100% Saturated Concentration	EN 14414-D (MOD)	TENSILE STRENGTH RETAINED 99% (MD), 97% (CMD)
			RESULT - PASS
	Chemical Resistance - XYLENES - 100% Saturated Concentration	EN 14414-D (MOD)	TENSILE STRENGTH RETAINED 91% (MD), 106% (CMD)
			RESULT - PASS
	Chemical Resistance - TCE - 100% Saturated Concentration	EN 14414-D (MOD)	TENSILE STRENGTH RETAINED 99% (MD), 93% (CMD)
			RESULT - PASS
	Chemical Resistance - PCE - 100% Saturated Concentration	EN 14414-D (MOD)	TENSILE STRENGTH RETAINED 93% (MD), 93% (CMD)
			RESULT - PASS
	Chemical Resistance - NAPTHALENE - 100% Saturated Concentration	EN 14414-D (MOD)	TENSILE STRENGTH RETAINED 101% (MD), 93% (CMD)
			RESULT - PASS
	Chemical Resistance - HEXANE - 100% Saturated Concentration	EN 14414-D (MOD)	TENSILE STRENGTH RETAINED 99% (MD), 104% (CMD)
			RESULT - PASS

GP® TITANFLEX®

JUTA UK

Please contact JUTA UK Directly for more information on GP® TITANFLEX®

Jointing and Sealing

GP® TITANFLEX® can be heat welded or taped, with jointing carried out by competent personnel with suitable qualifications in accordance with best practice. GP® TITANFLEX® should be overlapped by at least 100mm. If taping joints, only suitable tape must be used, ensuring application with a silicone roller to remove trapped air. JUTA pre-formed details, or self adhesive gas membrane are available for sealing around protuberances.

Accessory Products

- GP® DPC
- GP® Tape
- GP® Self Adhesive Membrane (SAM)
- GP® Primer
- GP® Top Hats and Preformed Corners
- GP® Protection Fleece
- GP® Void Vent (24/40mm)