BENDIX STREET, NEW CROSS, MANCHESTER - DRAINAGE MAINTENANCE SCHEDULE

Organisation responsible for maintenance: _____

Contact Details – Name: _____

Number:_____

Documents:

- Drainage Layout
- Drainage Schedule
- Drainage Details

SUDS have been specified for the site to promote sustainable management of surface water for both flow attenuation and water quality. This document outlines the maintenance schedules for each system in order to maintain the efficiency of the drainage network. The schedules have been created based on guidance from CIRIA C753.

Table 1: Pipes and Manholes Maintenance Schedule

Maintenance schedule	Required Action	Recommended Frequency
Occasional maintenance	Visual inspection of covers, gratings and manhole chambers.	Annually or as required.
	Cleaning out manholes.	Annually or as required.
	CCTV inspection of drainage pipes.	Annually or as required.
Remedial actions	Reactive cleaning of manholes and drains.	During flooding events.
	Cleaning out drains by water jetting.	As required.
	Replace damaged covers, grating and manhole components.	As required.
	Rehabilitation – repairs, relining or replacement.	As determined by inspections.

Table 2: Geocellular Tank Maintenance Schedule

Maintenance Schedule	Required Action	Recommended Frequency
Regular Maintenance	Inspect and identify areas that are not operating correctly. If required, take remedial action	Monthly for 3 months, then annually or as required
	Remove debris from the catchment surface	Monthly
	Remove sediment from pre-treatment structures	Annually

Remedial Actions	Repair / rehabilitate inlets/outlet and vents	As required
Monitoring	Inspect inlets, outlets and vents to ensure they are in good condition and operating as designed.	Annually
	Survey Inside of tank for sediment build up and remove is necessary	Every 5 years or where concerned about operation

Table 3: Catchpit Manhole and Silt Traps

Maintenance schedule	Required Action	Recommended Frequency
Regular maintenance	Remove litter and debris	Monthly or as required.
	Cleaning out manholes.	Monthly or as required.
	Inspect inlets and Outlets and Pipework for Silt Accumulation and establish suitable silt removal frequencies.	Six Monthly
	Remove Sediment from Inlets, Outlets and Pipework	As Required

Table 4: Channel Drain

Maintenance schedule	Required Action	Recommended Frequency
Regular maintenance	Cleaning out Access Chamber.	Monthly or as required.
	inspect outlet for operation/blockages	Six Monthly
	Remove access chamber covers as required to flush the channels clean of debris. Remove this debris from the sump and dispose of	Six Monthly
	Inspect components for any wear or breakages.	Six Monthly

GENERAL NOTES

1. DRAWINGS ARE TO BE READ IN CONJUNCTION WITH ALL RELEVANT SPECIFICATIONS, ENGINEERS, ARCHITECTS & SERVICES DRAWINGS, INCLUDING APPROVED BUILDERS WORK DRAWINGS. CONTRACTOR TO NOTIFY ENGINEER OF DISCREPANCIES BETWEEN STRUCTURAL DRAWINGS AND SPECIFICATIONS OR OTHER DRAWINGS.

2. ALL DIMENSIONS ARE IN MILLIMETRES UNLESS NOTED OTHERWISE.

3. THE POSITION, SIZE AND LEVELS OF ALL EXISTING DRAINS ARE TO BE CONFIRMED ON SITE PRIOR TO THE COMMENCEMENT OF THE WORKS AND ANY DISCREPANCIES REPORTED IMMEDIATELY TO THE ENGINEER.

4. DO NOT SCALE FROM THIS DRAWING, WORK TO DIMENSIONS OR CO-ORDINATES PROVIDED. ALL LEVELS ARE IN METRES AND ALL DIMENSIONS ARE IN MILLIMETRES, UNLESS OTHERWISE NOTED. ANY AMBIGUITIES, OMISSIONS AND ERRORS ON DRAWINGS, SHALL BE BROUGHT TO THE ENGINEERS ATTENTION IMMEDIATELY.

DRAINAGE NOTES

1. THE CONTRACTOR SHALL ALLOW FOR THE PROTECTION, TEMPORARY AND PERMANENT SUPPORT AND DIVERSION WORKS AS NECESSARY, TO ALL EXISTING SERVICES TO THE SATISFACTION OF THE PUBLIC UTILITIES.

2. THE CONTRACTOR SHALL ALLOW FOR DEALING WITH SURFACE WATER RUN-OFF INTO EXCAVATIONS AND FROM GROUNDWATER BY MEANS OF SUMPS, PUMPING AND DE-WATERING AS APPROPRIATE, IN ORDER TO KEEP THE EXCAVATION AS REASONABLY DRY AS POSSIBLE DURING THE CONSTRUCTION OF THE WORKS.

3. ALL PRIVATE DRAINAGE WITHIN THE SITE IS TO COMPLY WITH THE REQUIREMENTS OF BSEN752 AND BUILDING REGULATIONS PART H. WHERE APPROPRIATE, ALL ADOPTED DRAINAGE SHALL BE DESIGN AND CONSTRUCTED IN ACCORDANCE WITH SEWERS FOR ADOPTION 8th EDITION AND THE ADOPTING AUTHORITIES STANDARD REQUIREMENTS.

4. ALL PRIVATE DRAINAGE PIPES TO BE LAID IN TRENCHES BEDDED CLASS 'B' ON SINGLE SIZED AGGREGATE AND BACKFILLED WITH APPROVED SELECTED FILL (40mm DOWN) REUSED FROM EXCAVATED MATERIAL. UNDER BUILDINGS AND WHERE COVER TO INVERT IS LESS THAN 1200mm UNDER TRAFFICKED AREAS PIPES TO BE CAST IN CONCRETE (CLASS Z BEDDING). CLASS 'S' BED AND SURROUND MAY BE REQUIRED FOR SEWERS TO BE ADOPTED. REFER TO SPECIFIC DRAWINGS FOR FURTHER INFORMATION.

5. SELECTED BACKFILL MATERIAL SHALL CONSIST OF UNIFORM EXCAVATED MATERIAL, FREE FROM STONES LARGER THAN 40mm, CLAY LUMPS LARGER THAN 75mm, TREE ROOTS, CONTAMINATED MATERIAL. SELECTED BACKFILL MATERIAL IS TO BE PLACED IN LAYERS NOT EXCEEDING 150mm THICKNESS. THE MATERIAL SHALL BE COMPACTED TO ACHIEVE NOT LESS THAN 95% OF THE MAXIMUM DRY DENSITY AS DETERMINED IN LABORATORY COMPACTION TESTS. SUFFICIENT TESTING SHALL BE CARRIED OUT, BY THE CONTRACTOR, TO DEMONSTRATE THIS IS ACHIEVED (NUMBER AND FREQUENCY OF TESTING TO BE AGREED WITH RIDGE). WHERE THE MOISTURE CONTENT OF THE MATERIAL PROHIBITS COMPLIANCE WITH THE ABOVE 6F1 OR SIMILAR IMPORTED MATERIAL SHALL BE USED.

6. CONCRETE PROTECTION TO PIPEWORK IS TO BE PROVIDED AS FOLLOWS:
   a) ALL PIPEWORK WITHIN PEDESTRIAN/SOFT AREAS WITH LESS THAN 600mm COVER.
   b) ALL PIPEWORK SUBJECT TO VEHICULAR OVERRUN WITH LESS THAN 1.2m COVER.

7. ALL PIPEWORK WITHIN MANHOLES ARE TO BE LAID SOFFIT TO SOFFIT (U.N.O). ALL CHAMBER INVERT LEVELS ARE FOR THE OUTGOING PIPE LEVELS. BACKDROP PIPEWORK SHALL BE CONNECTED AT SOFFIT TO SOFFIT WITH THE RODDING ACCESS LEVEL SPECIFIED.

8. ALL DRAINS TO BE LAID ACCURATELY TO LINE AND LEVEL IN STRICT ACCORDANCE WITH THE MANUFACTURERS RECOMMENDATIONS.

9. ANY GRADIENTS OF DRAINS INDICATED ARE INDICATIVE ONLY AND THE CONTRACTOR SHALL INSTALL THE DRAINS TO THE SPECIFIED LEVELS SHOWN FOR EACH MANHOLE (U.N.O). CATCHPIT INVERT LEVELS ARE FOR THE OUTGOING PIPE WITH THE SUMP LEVEL SPECIFIED SEPARATELY.

10. CO-ORDINATE SETTING OUT INFORMATION FOR MANHOLES IS TO THE INTERSECTION THE DRAINS AND NOT THE CENTRE OF THE MANHOLE.

11. COVER LEVELS OF THE MANHOLES ARE PROVISIONAL AND SUBJECT TO ADJUSTMENT ON SITE TO SUIT THE FINISHED GROUND LEVELS. ALL EXTERNAL WORKS CONSTRUCTION AREAS TO BE AS LOCATED BY THE ARCHITECT.

12. MANHOLE COVERS AND FRAMES ARE TO BE IN ACCORDANCE WITH BSEN124 AND THE FOLLOWING:
   a) VEHICULAR AREAS: CLASS D400 (E600 IN VULNERABLE SERVICE YARD LOCATIONS), DOUBLE TRIANGULAR, 150mm DEEP DUCTILE IRON COVER AND FRAME WITH THREE POINT COVER SEATING, BADGED FW OR SW FOR FOUL OR SURFACE WATER DRAINAGE.
   b) PEDESTRIAN AREAS: CLASS B125, 100mm DEEP, BADGED FW OR SW FOR FOUL OR SURFACE WATER DRAINAGE.

13. POSITIONS AND SIZES OF ABOVE GROUND FOUL AND SURFACE WATER DRAINAGE CONNECTIONS ARE TO BE CONFIRMED PRIOR TO CONSTRUCTION WITH THE ARCHITECT & M&E ENGINEER.

14. GULLY GRATINGS AND STEEL CHANNEL COVERS ARE TO BE IN ACCORDANCE WITH BSEN124 AS FOLLOWS:
   a) AREAS SUBJECT TO VEHICULAR OVERRUN: CLASS D400 MINIMUM.
   b) AREAS NOT SUBJECT TO REGULAR VEHICLE OVERRUN (ADJACENT TO KERBS ETC): CLASS C250.
   c) GULLY GRATES ADJACENT TO KERBS SHALL BE HINGED ON THE SIDE OF THE TRAFFIC DIRECTION (LEFT HAND SIDE).

15. ALL BRICKWORK IN CONNECTION WITH DRAINAGE IS TO BE SOLID CLASS B ENGINEERING BRICK TO BS3921.

16. ALL PRECAST CONCRETE PIPES, CHAMBER PRODUCTS AND ROAD GULLIES SHALL BE TO BS5911 AND BE KITEMARKED.

17. ALL DRAINAGE INSITU CONCRETE SHALL BE GEN3 (U.N.O).

18. ALL INSITU AND CONCRETE PRODUCTS SHALL COMPLY WITH THE REQUIREMENTS FOR SULPHATE EXPOSURE IN ACCORDANCE WITH BRE SPECIAL DIGEST 1, CONCRETE IN AGGRESSIVE GROUND (2001) PART 1: TABLE 2.

19. UPON COMPLETION OF THE WORKS THE CONTRACTOR SHALL CLEAN ALL DRAINAGE BY JETTING, REMOVING ALL DEBRIS FROM SITE. NO DEBRIS SHALL BE PERMITTED TO ENTER THE EXISTING DRAINAGE SYSTEM.

20. CONSTRUCTION JOINTS IN CONCRETE SURROUND MUST NOT BE WITHIN 150MM OF CHAMBER/SHAFT RING JOINTS.

21. ROCKER PIPES TO BE SURROUNDED WITH CONCRETE LOCATED 150mm MINIMUM 200mm MAXIMUM FROM THE FIRST FLEXIBLE JOINT TO THE MANHOLE WALL.

22. SOFT SPOTS IN THE TRENCH FORMATION SHALL BE REMOVED AND REPLACED WITH GRANULAR BEDDING UNLESS INSTRUCTED OTHERWISE.

23. LATERAL CONNECTIONS IN BETWEEN MANHOLE RUNS SHALL BE FORMED BY USING PURPOSE MADE JUNCTION FITTINGS. BEND FITTINGS SHALL BE PROVIDED WHERE APPROPRIATE TO DIRECT THE FLOW INTO MAIN RUNS.

24. IT SHALL BE THE CONTRACTORS RESPONSIBILITY TO LIAISE WITH BUILDING CONTROL FOR APPROVALS, INTERIM INSPECTION, SNAGGING AND FINAL INSPECTIONS OF THEIR WORK.

25. THE CONTRACTOR SHALL CONFIRM THE LOCATION OF ALL EXISTING STATUTORY UNDERTAKERS APPARATUS AND SERVICE CONNECTIONS ADJACENT TO AND CROSSING THE WORKS BY TRIAL PITS PRIOR TO COMMENCING MACHINE DIG.

26. AT THE CONCLUSION OF THE WORKS THE CONTRACTOR SHALL PROVIDE A MARKED UP DRAWING TO RECORD ANY AS BUILT VARIATIONS NOT SHOWN ON THE DRAWINGS.

27. THE DRAINAGE SYSTEM IS NOT DESIGNED TO ACCEPT UNTREATED EFFLUENT FROM A COMMERCIAL KITCHEN CONTAINING GREASE AND OILS. REMOVAL OF GREASE AND OIL SHOULD BE MADE AT SOURCE USING A FLOOR MOUNTED ABOVE GROUND GREASE REMOVAL SYSTEM. IT IS RECOMMENDED THAT A MECHANICAL GREASE REMOVAL SYSTEM BE EMPLOYED FOR THIS PURPOSE NOT A PASSIVE SYSTEM.

28. PIPEWORK TO BE OF THE FOLLOWING MANUFACTURER: 100 / 150 / 225MM DIAMETER HEPWORTH SUPERSLEEVE VITRIFIED CLAY PIPES (40KN/mm CRUSHING STRENGTH), 300mm + TO BE CONCRETE CLASS M. ALTERNATIVELY 'POLYSEWER' UPVC DRAINAGE SYSTEM BY POLYPIPE WHEN INSTALLED IN LINE WITH THE MANUFACTURERS RECOMMENDATIONS. FILTER DRAINAGE TO BE PERFORATED HDPE.

29. ALL RWP, WPC & GULLY CONNECTIONS TO BE 100mm DIA UNO & ARE RODDABLE AT LOCATIONS ABOVE GROUND LEVEL.

30. ALL INSPECTION CHAMBERS WITH A DEPTH GREATER THAN 1.2m TO HAVE A 350mm DIAMETER REDUCING PLATE LOCATED BENEATH COVER AND FRAME TO PREVENT ACCESS.

DRAINAGE KEY

- EXISTING CW DRAIN
- EXISTING CW MANHOLE
- PROPOSED CW DRAIN
- PROPOSED CW MANHOLE
- PROPOSED FW DRAIN
- PROPOSED FW MANHOLE
- PROPOSED SW DRAIN
- PROPOSED SW MANHOLE
- PROPOSED CHANNEL DRAIN OUTFALL
- PROPOSED CHANNEL DRAIN
- SITE BOUNDARY

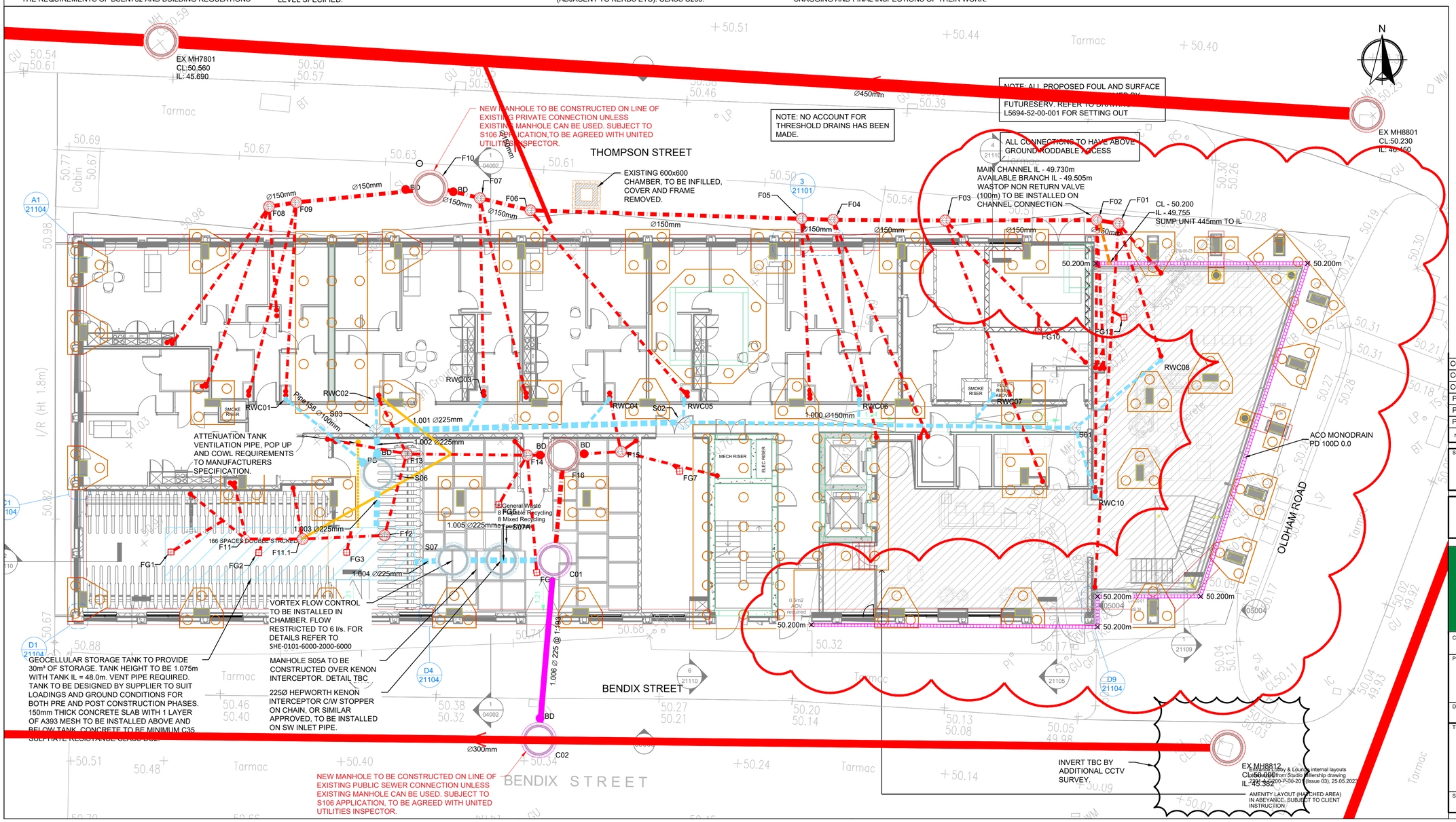

No	DATE	DRAWN	REV'D ENG.	AMENDMENT
C03	13.09.23	AP	PB	CHANNEL DRAINAGE ADDED
C02	11.02.22	AS	EJD	UPDATED TO M&E
C01	16.11.21	AS	EJD	ISSUED FOR CONSTRUCTION
P3	10.08.21	AS	EJD	SURFACE WATER UPDATES
P2	18.06.21	AS	PG	ISSUED FOR COSTING
P1	22.09.20	AS	PG	ISSUED FOR TENDER

STATUS: A

PURPOSE OF ISSUE: CONSTRUCTION

COPYRIGHT:
The concepts and the information contained in this document are the copyright of Ridge and Partners LLP. Use or copying of the document in whole or in part without written permission of Ridge and Partners LLP constitutes an infringement of copyright.

RIDGE

CLIENT: GMI CONSTRUCTION

PROJECT: BENDIX STREET, NEW CROSS,MANCHESTER

DRAFTER: JS

ENGINEER: PG

TITLE: DRAINAGE GA

PROJECT REFERENCE:

SCALE	SHEET	DRAWING No	REV
1:100	A1	D480-RDG-00-ZZ-DR-C-0101	C03

THE DEPTH OF THE GULLY CAN BE INCREASED BY UPTO 300mm BY FITTING A 225mm COUPLING CODE VC1/3 AND A 300mm HIGH RAISING PIECE CODE SIC3/1 BETWEEN THE FRAME AND THE GULLY BODY.

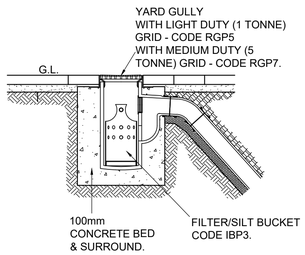

YARD GULLY

(SHOWN AS HEPWORTH PRODUCT BUT OTHER SIMILAR CAN BE USED)

NOTES

1. GULLY POTS: HIGHWAY GULLIES P.C.C. TO B.S. 5911 GULLY POT TO BE OF 100 LITRES CAPACITY.
2. MAXIMUM TRENCH WIDTH FOR 150mm GULLY LEAD IS 600mm.
3. NUMBER OF BENDS MAY VARY DUE TO SITE DIFFERENCES - SEE DRAINAGE SCHEDULE.
4. CONCRETE SURROUND TO PIPES SHALL ALWAYS FINISH AT A JOINT.
5. HEAVY DUTY, CAST IRON, LAMPHOLE TYPE COVER IN HARDSTANDING AND AREAS ACCESSIBLE TO VEHICULAR TRAFFIC, TO B.S. EN 124. 1994 CLASS D400, C250, OR B125 DEPENDANT ON LOCATION.
6. COVER SLAB TO BE 200MM THICK GRADE C20 CONCRETE.

INVERT OF RODDING EYE TO BE NOT GREATER THAN 1.5m ABOVE TOP OF BENCHING. (UNLESS SPECIFIC MAN ACCESS REQUIREMENTS ARE PROVIDED.)

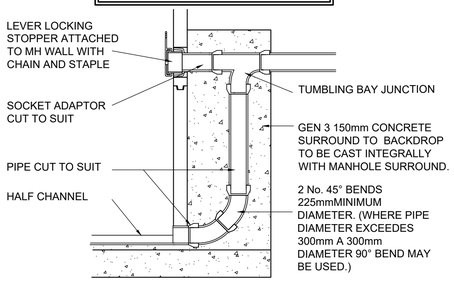

EXTERNAL VERTICAL BACKDROP

MH S03A

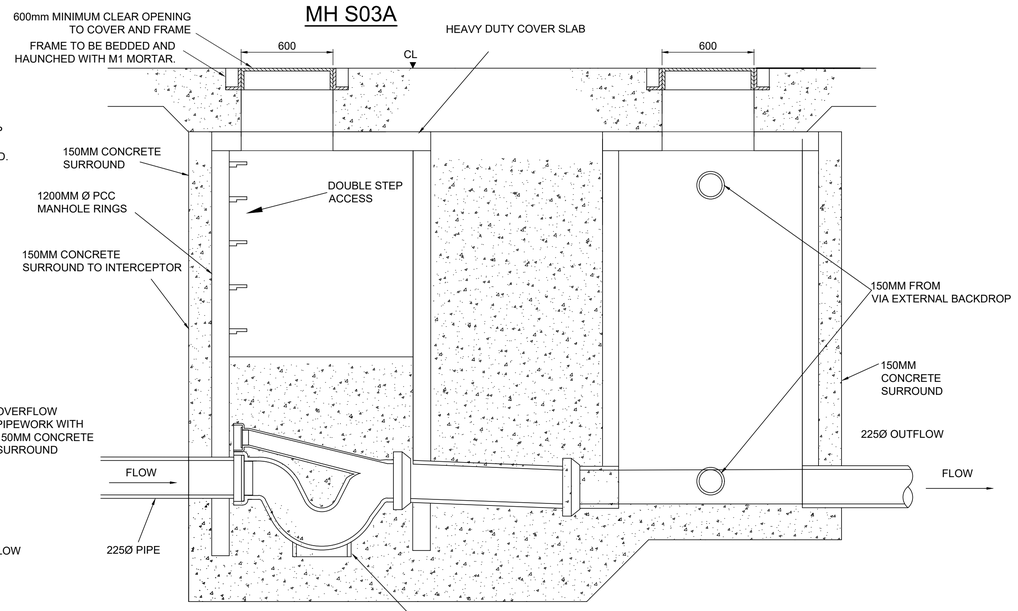

INTERCEPTOR MH

DOWNSTREAM MH

SECTION THROUGH KENON INTERCEPTOR

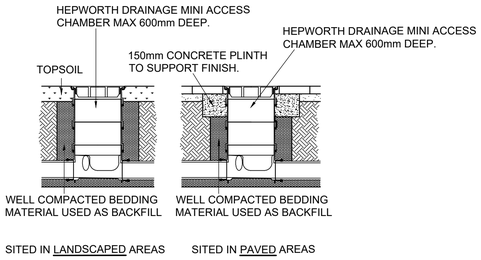

MINI ACCESS CHAMBERS (600mm DEEP)

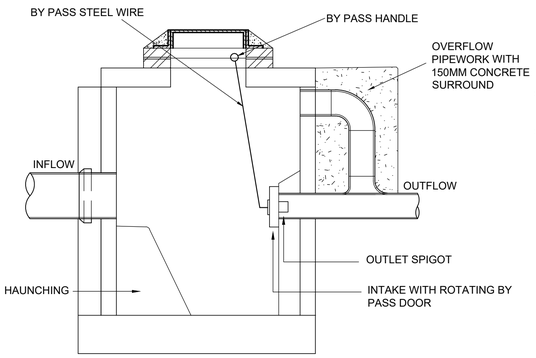

SECTION 1-1

NOTE :
THIS DRAWING IS INDICATIVE ONLY. SEE MANUFACTURERS DRAWINGS AND SPECIFICATION FOR CONSTRUCTION DETAILS.

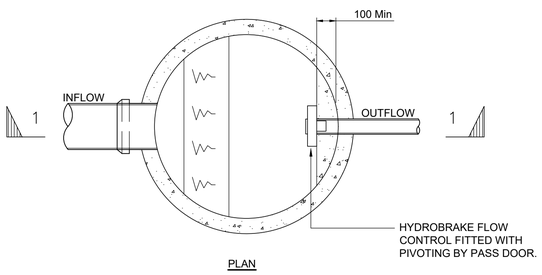

PLAN

VORTEX CONTROL CHAMBER

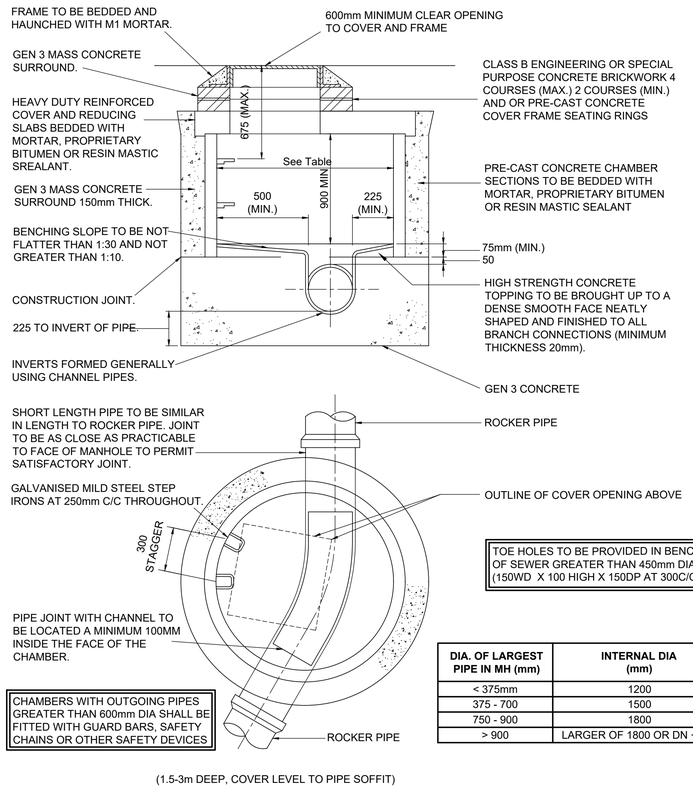

TOE HOLES TO BE PROVIDED IN BENCHING OF SEWER GREATER THAN 450mm DIA (150WD X 100 HIGH X 150DP AT 300C/C).

CHAMBERS WITH OUTGOING PIPES GREATER THAN 600mm DIA SHALL BE FITTED WITH GUARD BARS, SAFETY CHAINS OR OTHER SAFETY DEVICES

DIA. OF LARGEST PIPE IN MH (mm)	INTERNAL DIA (mm)
< 375mm	1200
375 - 700	1500
750 - 900	1800
> 900	LARGER OF 1800 OR DN + 900

(1.5-3m DEEP, COVER LEVEL TO PIPE SOFFIT)

MANHOLE TYPE B

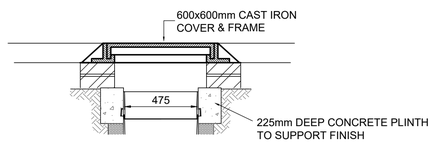

SITED IN EXTERNAL HARD STANDING AREAS WITH 600x600 CAST IRON COVER

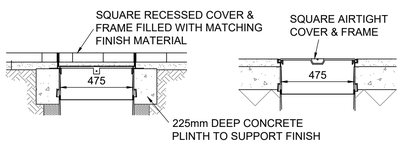

SITED IN DRIVEWAYS / HARD LANDSCAPED AREAS WITH RECESSED COVER

SITED IN CONCRETE FLOOR SLAB

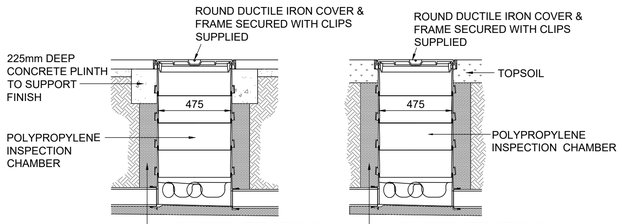

UNIVERSAL PRODUCT - ADAPTOR TO PVC-U PIPE INCLUDED

SITED IN DRIVEWAYS / HARD LANDSCAPED AREAS WITH STANDARD ROUND COVER

SITED IN SOFT LANDSCAPED AREAS WITH STANDARD ROUND COVER

POLYPROPYLENE INSPECTION CHAMBER INSTALLATION DETAIL

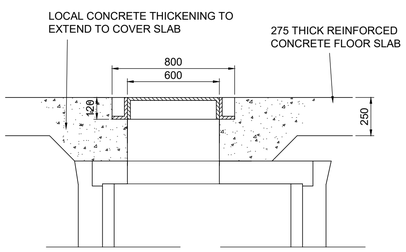

COVER DETAIL FOR MANHOLE TYPE B LOCATED IN CONCRETE FLOOR SLAB

GENERAL NOTES

1. DRAWINGS ARE TO BE READ IN CONJUNCTION WITH ALL RELEVANT SPECIFICATIONS, ENGINEERS, ARCHITECTS & SERVICES DRAWINGS, INCLUDING APPROVED BUILDERS WORK DRAWINGS. CONTRACTOR TO NOTIFY ENGINEER OF DISCREPANCIES BETWEEN STRUCTURAL DRAWINGS AND SPECIFICATIONS OR OTHER DRAWINGS.
2. ALL DIMENSIONS ARE IN MILLIMETRES UNLESS NOTED OTHERWISE.
3. THE POSITION, SIZE AND LEVELS OF ALL EXISTING DRAINS ARE TO BE CONFIRMED ON SITE PRIOR TO THE COMMENCEMENT OF THE WORKS AND ANY DISCREPANCIES REPORTED IMMEDIATELY TO THE ENGINEER.
4. DO NOT SCALE FROM THIS DRAWING, WORK TO DIMENSIONS OR CO-ORDINATES PROVIDED. ALL LEVELS ARE IN METRES AND ALL DIMENSIONS ARE IN MILLIMETRES, UNLESS OTHERWISE NOTED. ANY AMBIGUITIES, OMISSIONS AND ERRORS ON DRAWINGS, SHALL BE BROUGHT TO THE ENGINEERS ATTENTION IMMEDIATELY.

CONSTRUCTION RECORD DRAWING

THE INFORMATION SHOWN ON THIS CONSTRUCTION RECORD DRAWING IS BASED ON THE LATEST ISSUED CONSTRUCTION DRAWINGS WHICH HAVE BEEN MODIFIED AS NECESSARY WITH INFORMATION SUPPLIED BY THE CONTRACTOR TO INCORPORATE CHANGES MADE DURING CONSTRUCTION. INFORMATION OBTAINED FROM THIRD PARTIES HAS NOT BEEN INDEPENDENTLY VERIFIED BY SCOTT HUGHES DESIGN AND MAY NOT BE WHOLLY ACCURATE. ANY PARTY SEEKING TO USE THIS DRAWING MUST FIRST VERIFY ITS FITNESS FOR THE INTENDED PURPOSE WITH SUITABLE SITE INSPECTIONS/INVESTIGATIONS AS DEEMED APPROPRIATE.

No	DATE	DRAWN	REV'D ENG.	AMENDMENT
C03	08.11.23	AB	EDM	CONSTRUCTION RECORD
C02	11.02.22	AS	EJD	INTERECEPTOR MH UPDATED
C01	16.11.21	AS	PG	ISSUED FOR CONSTRUCTION
P2	18.06.21	AS	PG	ISSUED FOR COSTING
P1	22.09.20	AS	PG	ISSUED FOR TENDER

STATUS: CR
PURPOSE OF ISSUE: CONSTRUCTION RECORD

COPYRIGHT:
The concepts and the information contained in this document are the copyright of Ridge and Partners LLP. Use or copying of the document in whole or in part without written permission of Ridge and Partners LLP constitutes an infringement of copyright.

RIDGE

CLIENT: GMI CONSTRUCTION

PROJECT: BENDIX STREET, NEW CROSS,MANCHESTER

DRAFTER: AS
ENGINEER: PG

TITLE: DRAINAGE DETAILS SHEET 1

PROJECT REFERENCE:

SCALE	SHEET	DRAWING No	REV
NTS	A1	D480-RDG-00-ZZ-DR-C-0102	C03

COMPRESSIBLE BOARD OR PREFORMED JOINT FILLER FOR FULL THICKNESS OF CONCRETE BED OR SURROUND

JOINTS REQUIRED AT 5m INTERVALS MAX.

FLEXIBLE PIPE JOINT @ MAXIMUM 3 PIPE LENGTHS & IN ACCORDANCE WITH PIPE MANUFACTURERS INSTRUCTIONS.

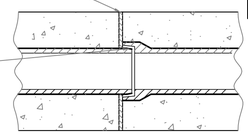

COMPRESSIBLE FILLER IS TO BE USED AT PIPE JOINTS IN CONCRETE PROTECTION TO PIPES. FILLER TO BE USED CAN BE HYDROCELL BY FOSROC, OR APPROVED BITUMEN IMPREGNATED INSYLATING BOARD TO B.S. 1142 PART 3. THE COMPRESSIBLE MATERIAL SHALL BE CUT TO MATCH THE PIPELINE SHAPE AND MUST EXTEND THROUGH THE FULL HEIGHT OF THE CONCRETE.

COMPRESSIBLE FILLER FOR PIPE JOINTS		
NOMINAL PIPE DIA	HYDROCELL	Bitumen Impregnated Board
100 - 300	15mm	18mm
350 - 450	20mm	24mm
465 - 750	35mm	36mm

GROUND LEVEL

SELECTED AS DUG MATERIAL IN NON TRAFFICKED AREAS, M.O.T. TYPE 1 IN HIGHWAYS. REFER TO STANDARD NOTES DRAWING FOR CLASSIFICATION OF 'AS-DUG' MATERIAL

CONCRETE SUROUND GRADE GEN 3

100mm GRANULAR BEDDING.

300 300 300

300 MIN 300 MIN

MAXIMUM TRENCH WIDTHS	
PIPE DIA (mm)	WIDTH (mm)
100	600
150	700
225	800
300	900
375	1050
450	1150
525	1200
600	1350
750	1450
825	1500
950	1600
1050	1900

THIS DETAIL IS TO BE USED WHERE DEPTH TO PIPE SOFFIT IS LESS THAN: HARDSTANDING & ROADS 1.2m, FOOTPATHS 0.9m AND SOFT LANDSCAPING 0.6m

CLASS 'Z' PIPE BEDDING

BS EN 1610:1997 Annex B Table B.15 Coarse Aggregate - Pipe Bedding								
Sieve Size (mm)	Percentage by mass passing BS sieves for nominal sizes							
	Graded Aggregate (mm)				Single-sized Aggregate (mm)			
	40 to 5	20 to 5	14 to 5		40	20	14	10
50.0	100	-----	-----		100	-----	-----	-----
37.5	90 - 100	100	-----		85 - 100	100	-----	-----
20.0	35 - 70	90 - 100	100		0 - 25	85 - 100	100	-----
14.0	-----	-----	90 - 100		-----	-----	85 - 100	100
10.0	10 - 40	30 - 60	50 - 85		0 - 5	0 - 25	0 - 50	85 - 100
5.0	0 - 5	0 - 10	0 - 10		-----	0 - 5	0 - 10	0 - 25
2.36	-----	-----	-----		-----	-----	-----	0 - 5

RIGID PIPES BEDDING GRADING

BASED ON BS EN 1610 : 1997 TABLE B.15
FOR RIGID PIPES THE BEDDING SHOULD BE SINGLE SIZE MATERIAL OR GRADED MATERIAL FROM 5MM UP TO A MAX SIZE OF 10MM FOR 100MM PIPES; 14MM FOR 150MM PIPES; 20MM FOR 225MM TO 600MM PIPES; 40MM FOR OVER 675MM PIPES

SELECTED AS DUG MATERIAL IN NON TRAFFICKED AREAS, M.O.T. TYPE 1 IN HIGHWAYS.

SELECTED AS DUG MATERIAL. REFER TO STANDARD NOTES DRAWING FOR CLASSIFICATION OF 'AS DUG' MATERIAL

FOR GRANULAR BEDDING REFER TO TABLE

Y VALUE (BELOW PIPE):
HARD SPOTS/IRREGULAR TRENCH BOTTOM BC/4 (200mm MIN)
EVEN TRENCH BOTTOM BC/6 (100mm MIN)

BC = OUTSIDE DIAMETER

150 BC/4 Y

BC + 300 MIN

PIPE BEDDING CLASS B

BEDDING FACTOR 1.9

SOIL PIPE

SHORT LENGTH OF PIPE CUT TO SUIT

RC GROUND SLAB

SOIL PIPE ADAPTOR

FFL

Ground Slab

REST BEND

Foundations

RC GROUND BEAM

RWP CONNECTION DETAIL

RWP ADAPTER

RWP

FFL

EXT GL

HEPWORTH CODE (SPA 1) 'ACCESS PIPE' WITH RAISING PIECE AND ALLOY COVER TO ENABLE RODDING IN BOTH DIRECTIONS

SHORT LENGTH OF PIPE CUT TO SUIT

REST BEND

MAX 600mm LONG "ROCKER" PIPE

45° OBLIQUE JUNCTION

CARRIER DRAIN

NOTE

150mm GRADE C20 CONCRETE SURROUND FOR ALL PIPEWORK LESS THAN 1.2m DEPTH FROM FINISH FLOOR LEVEL TO PIPE SOFFIT

600x450 CLEAR OPENING WITHIN FRAME.

600

150Ø HEPWORTH KENON INTERCEPTOR C/W STOPPER ON CHAIN, OR SIMILAR APPROVED, TO BE INSTALLED ON OUTLET PIPE.

MIN 75mm THICK ST2 (GEN 1) BLINDING

ALL CONCRETE SURROUND TO BE GEN 3 WITH SULPHATE RESISTING CEMENT UNLESS AGREED OTHERWISE

D TYPE CHAMBER SECTION 900x600mm PCC INSPECTION CHAMBER (MARSHALLS OR SIMILAR). BASE AND SURROUND IN 150mm GEN 3 CONCRETE. CONNECTION PIPE CORED DRILLED THROUGH CHAMBER WALL TO PROVIDE MINIMUM 500mm SILT DEPTH.

INTERCEPTOR

Reverse-Action Interceptor
Application Detail
GEN6

Interceptor - sited upstream of manhole
100 Ø code RI3/1
150 Ø code RI3/2

Alternative detail Showing lever locking stopper
100 Ø - code IL1

Push-fit stopper

Rocker pipe

Flow

Concrete bed and surround

Half channel

Notes -
Dimensions may vary due to manufacturing tolerances.

GENERAL NOTES

1. DRAWINGS ARE TO BE READ IN CONJUNCTION WITH ALL RELEVANT SPECIFICATIONS, ENGINEERS, ARCHITECTS & SERVICES DRAWINGS, INCLUDING APPROVED BUILDERS WORK DRAWINGS. CONTRACTOR TO NOTIFY ENGINEER OF DISCREPANCIES BETWEEN STRUCTURAL DRAWINGS AND SPECIFICATIONS OR OTHER DRAWINGS.
2. ALL DIMENSIONS ARE IN MILLIMETRES UNLESS NOTED OTHERWISE.
3. THE POSITION, SIZE AND LEVELS OF ALL EXISTING DRAINS ARE TO BE CONFIRMED ON SITE PRIOR TO THE COMMENCEMENT OF THE WORKS AND ANY DISCREPANCIES REPORTED IMMEDIATELY TO THE ENGINEER.
4. DO NOT SCALE FROM THIS DRAWING, WORK TO DIMENSIONS OR CO-ORDINATES PROVIDED. ALL LEVELS ARE IN METRES AND ALL DIMENSIONS ARE IN MILLIMETRES, UNLESS OTHERWISE NOTED. ANY AMBIGUITIES, OMISSIONS AND ERRORS ON DRAWINGS, SHALL BE BROUGHT TO THE ENGINEERS ATTENTION IMMEDIATELY.

15mm THICK 'AEROFIL 2' FILLER BOARD WITH 15 WIDE X 12 DEEP 'PARASEAL' SEALANT

CONNECTING PIPE.

SADDLE JUNCTION BEDDED ON 1:3 MIX CEMENT/SAND MORTAR.

SADDLE JUNCTION (SQUARE OR OBLIQUE TO SUIT)

CONCRETE SURROUND GRADE GEN 3.

MAIN DRAIN

SADDLE CONNECTION NOT TO BE MADE WITHIN 300m OF EXISTING PIPE JOINT

SADDLE CONNECTION DETAIL

(DIAMETER OF MAIN DRAIN TO BE A MINIMUM OF DOUBLE THE SIZE OF THE CONNECTING PIPE. IN ALL OTHER CASES A PRE-FORMED JUNCTION IS TO BE USED.)

ABOVE GROUND DRAINAGE

SHORT LENGTH OF PIPE CUT TO SUIT

PIPE ADAPTOR

SSL

REST BEND

150mm GRADE GEN 3 CONCRETE SUPPORT TO REST BEND

TYPICAL DETAIL OF CONNECTION OF INTERNAL DRAINAGE TO BELOW GROUND DRAINAGE

TOC - 50.180m

ASPHALT PAVEMENT

SUB BASE COMPOSTION

CONCRETE BED & HAUNCH STRENGTH MIN C20/25 TO BE EN-206: 2013

FORMATION AND SIDEFILL

DRAIN TRENCH

LESS THAN 1000mm

CONCRETE BACKFILL

DRAIN TRENCH

D = 1000mm OR MORE

D LESS 150mm

CONCRETE BACKFILL

NOTES

1. CONCRETE TO BE GRADE GEN 3

2. JOINTS TO BE PROVIDED IN CONCRETE SURROUND AT NOT GREATER THAN 5.0m CENTRES. BUILDING REGULATIONS PART H1 PARA A11

3. WHERE THE TRENCH IS WITHIN 1m OF THE BUILDING THE TRENCH SHALL BE FILLED WITH CONCRETE UP TO THE LOWEST LEVEL OF THE FOUNDATIONS. WHERE THE TRENCH IS FURTHER THAN 1000mm FROM THE BUILDING, THE TRENCH SHALL BE FILLED WITH CONCRETE UP TO A LEVEL, BELOW THE LOWEST LEVEL OF THE FOUNDATION, EQUAL TO THE DISTANCE FROM THE BUILDING LESS 150mm.

PIPE RUNS ADJACENT TO BUILDING

BACKFILL OPTIONS ABOVE THE MODULAR UNIT FOR FIRST 100mm :

- MIN 100mm THICK SELECTED EXCAVATED MATERIAL IF SEEN SUITABLE BY THE SITE ENGINEER.
- 100 mm THICK COARSE SAND OR CLASS 6H SELECTED GRANULAR MATERIAL.
- BACKERBOARD HD (IS A PREMOULDED BOARD FOR USE AS PROTECTION AGAINST BACKFILL)

BACKFILL MATERIAL WITHIN 300mm OF THE TANK TO BE FREE FROM PARTICLES EXCEEDING 40mm IN DIAMETER, IN ACCORDANCE WITH CLASS 8 MATERIAL TO SERIES 600, VOLUME 1, MCHW. BACKFILLING TO BE CARRIED OUT IN ACCORDANCE WITH THE MANUFACTURER'S GUIDANCE.

SETTING OUT OF TANK TO SUIT TANK MANUFACTURER'S FINAL DESIGN

THE CONTRACTOR SHALL AVOID THE MOVEMENT OF CONSTRUCTION PLANT ACROSS THE STORAGE TANK WHERE POSSIBLE . WHERE THIS IS NOT POSSIBLE,CONSTRUCTION TRAFFIC TRAVELLING ACROSS THE TANK SHOULD BE RESTRICTED TO A MAXIMUM WEIGHT OF 32 TONNES PROVIDED THAT THE CONCRETE PROTECTION SLABS ARE IN PLACE AND THERE IS A MINIMUM BACKFILL COVER OF 1.0m. THE CONTRACTOR SHALL PROHIBIT THE STOCKPILING OF MATERIALS OVER THE TANK.

SSL = 50.650m

TO PROTECT THE WATERPROOF TUFLEX GEOMEMBRANE DURING BACKFILLING OPERATION, OVERLAY THE TOP AND SIDES WITH GEOTEX 300 PP NEEDLE PUNCHED NON-WOVEN PROTECTION GEOTEXTILE WITH A LAPPED JOINTS (AS SUPPLIED BY ALDERBURGH LIMITED).

BACKFILL OPTIONS AROUND THE SIDES OF MODULAR UNIT:

- 100mm THICK SELECTED EXCAVATED MATERIAL IF SEEN SUITABLE BY THE SITE ENGINEER.
- BACKERBOARD HD (IS A PREMOULDED BOARD FOR USE AS PROTECTION AGAINST BACKFILL)

TOP OF TANK LEVEL = 49.075m

ESS PLUVIAL CUBE MODULE TO BE WRAPPED WITH TUFLEX IMPERMEABLE GEOMEMBRANE WITH A mm LAP HEAT WELDED JOINTS. (AS SUPPLIED BY ALDERBURGH LIMITED).

ESS PLUVIAL CUBE MODULE (500 mm LONG x 500 mm WIDE X 1075 mm HIGH) ARRANGEMENTS AS SHOWN. TO BE INSTALLED IN ACCORDANCE WITH THE MANUFACTURER'S DETAILS AND SPECIFICATION.

PIPES CONNECTED TO THE ATTENUATION TANK USING HEAVY DUTY PIPE COLLARS (HEAT WELDED TO TULFEX IMPERMEABLE GEOMEMBRANE) WITH STAINLESS STEEL STRANGLE BANDS FOR FASTEINING AROUND THE PIPE (AS SUPPLIED BY ALDERBURGH LIMITED).

225Ø OUTLET PIPE TO MH S05 IL=48.000m

225Ø INLET PIPE FROM MH S04 IL=48.0000m

TANK BASE LEVEL = 48.000m

500

INLET/OUTLET PIPES MUST BE SUPPORTED WITH CONCRETE TO PROTECT IT DURING BACKFILLING

MODULES REQUIRE 450 mm MINIMUM BACKFILL COVER BEFORE DRIVING OVER WITH SMALL EXCAVATORS OR BOBCAT

A 3 - 5% CBR HAS BEEN ASSUMED AT SUB-BASE LEVEL SHOULD THE CBR BE TESTED AND FOUND TO BE LESS THAN 3% THEN THE ENGINEER SHALL BE NOTIFIED. ALSO, ANY SOFT SPOTS FOUND AT SUB-BASE LEVEL SHALL BE REPORTED TO THE ENGINEER

150mm THICK CONCRETE SLAB WITH 1 LAYER A393 MESH. CONCRETE TO BE MIN C35 WITH SULPHATE RESISTANCE CLASS DC2. SLAB TO EXTEND 500mm BEYOND TANK ON ALL SIDES.

TYPICAL DETAILS OF ATTENUATION TANK BASED ON ALDERBURGH PLUVIAL CUBE MODULE UNITS

No	DATE	DRAWN	REV'D ENG.	AMENDMENT
C05	13.09.23	AP	PB	CHANNEL DETAIL ADDED
C04	27.04.22	AS	EJD	TANK PROTECTION SLAB REMOVED
C03	11.02.22	AS	EJD	TANK DETAIL UPDATED
C02	02.08.21	AS	EJD	INTERCEPTOR DETAIL UPDATED
C01	16.11.21	AS	EJD	ISSUED FOR CONSTRUCTION
P3	10.08.21	AS	EJD	TANK DETAIL UPDATED
P2	18.06.21	AS	PG	ISSUED FOR COSTING
P1	??.09.20	AS	PG	ISSUED FOR TENDER

STATUS: A — PURPOSE OF ISSUE: CONSTRUCTION

COPYRIGHT:
The concepts and the information contained in this document are the copyright of Ridge and Partners LLP. Use or copying of the document in whole or in part without written permission of Ridge and Partners LLP constitutes an infringement of copyright.

RIDGE

CLIENT: GMI CONSTRUCTION

PROJECT: BENDIX STREET, NEW CROSS,MANCHESTER

DRAFTER: AS — ENGINEER: PG

TITLE: DRAINAGE DETAILS SHEET 2

PROJECT REFERENCE:

SCALE	SHEET	DRAWING No	REV
NTS	A1	D480-RDG-00-ZZ-DR-C-0103	C05