GENERAL NOTES

1. DO NOT SCALE FROM THIS DRAWING WORK TO FIGURED DIMENSIONS ONLY.
2. NO DEVIATION FROM THE DETAILS SHOWN ON THIS DRAWING IS ALLOWED WITHOUT PRIOR PERMISSION IN WRITING.
3. ALL DRAWINGS ARE TO BE READ IN CONJUNCTION WITH ALL ARCHITECTS, ENGINEERS AND SPECIALISTS DRAWINGS AND THE SPECIFICATION.
4. THE CONTRACTOR SHALL INCORPORATE ALL THE REQUIREMENTS OF THE PRE-TENDER STAGE HEALTH & SAFETY PLAN.

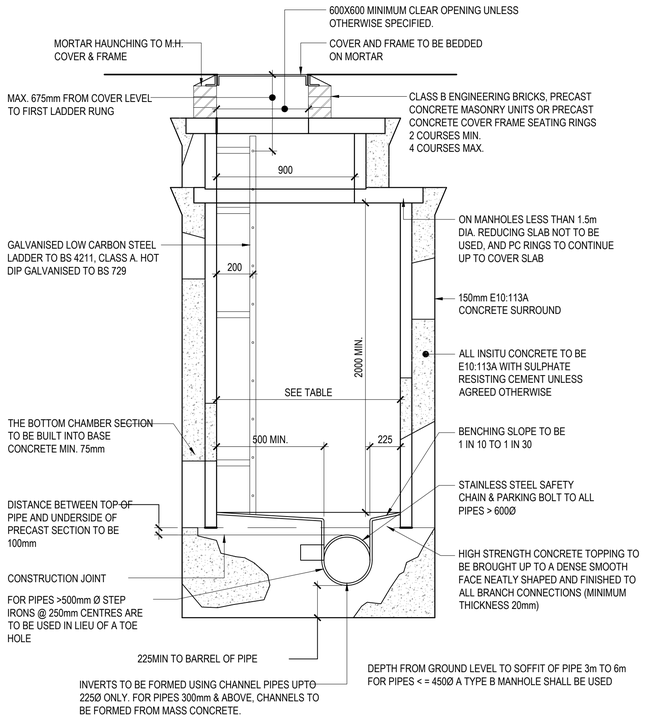

TYPICAL MANHOLE DETAIL TYPE A (SECTION)

[SCALE 1:20]

NOTE:
ADDITIONAL ROCKER PIPES MAY BE NECESSARY TO ACCOMMODATE TRANSITION OF PIPE GRADIENT TO VERTICAL DOWNPIPE

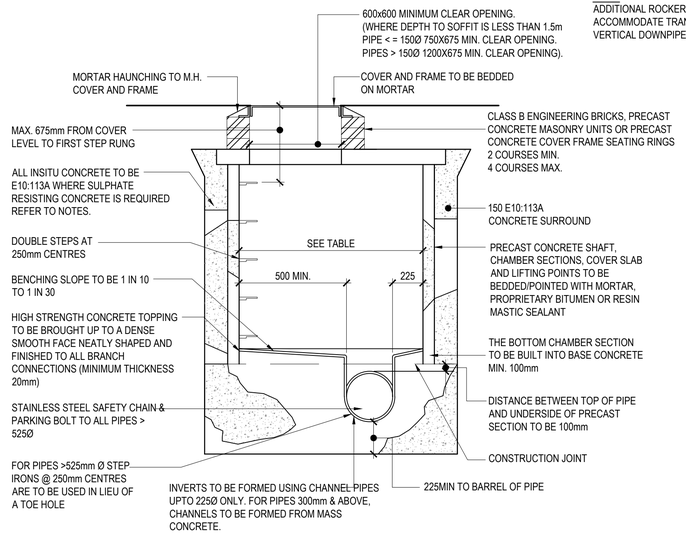

DIAMETER OF LARGEST PIPE IN MANHOLE (mm)	MIN. MANHOLE INTERNAL DIAMETER (mm)
< = 300mm (< 1.5M DEEP TO SOFFIT)	1200
> 300mm (< 1.5M DEEP TO SOFFIT)	THE LARGER OF 1800 OR (DN + 775)
< = 450mm	1200
> 450mm	THE LARGER OF 1800 OR (DN + 775)

TYPICAL MANHOLE DETAIL TYPE B (SECTION)

[SCALE 1:20]

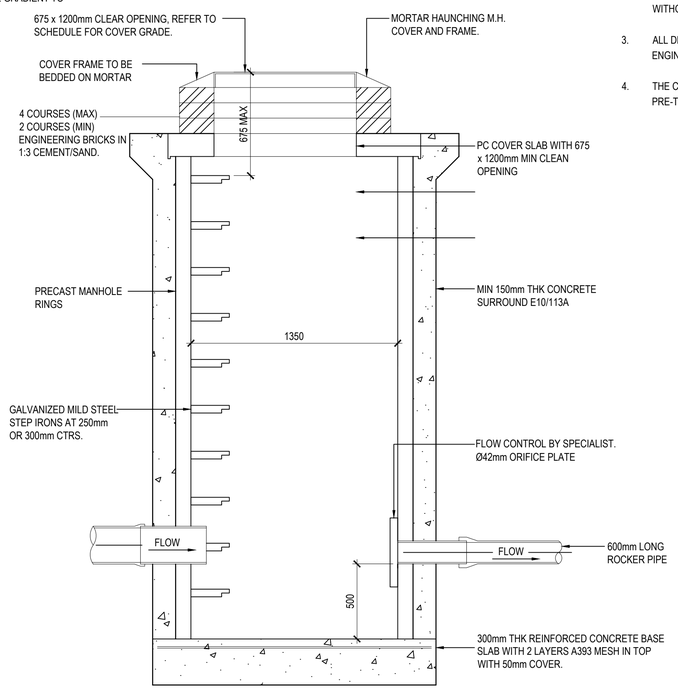

TYPICAL FLOW CONTROL CHAMBER

[SCALE 1:20]

FLOW CONTROL CHAMBER DETAIL IS INDICATIVE ONLY.
CONTRACTOR IS TO REFER TO MANUFACTURES SPECIFICATION, INSTALLATION AND CONSTRUCTION DETAILS PRIOR TO CONSTRUCTION

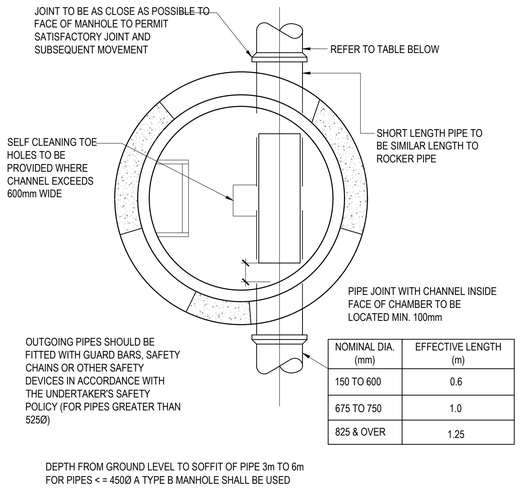

NOMINAL DIA. (mm)	EFFECTIVE LENGTH (m)
150 TO 600	0.6
675 TO 750	1.0
825 & OVER	1.25

DEPTH FROM GROUND LEVEL TO SOFFIT OF PIPE 3m TO 6m FOR PIPES < = 450Ø A TYPE B MANHOLE SHALL BE USED

TYPICAL MANHOLE DETAIL TYPE A (PLAN)

[SCALE 1:20]

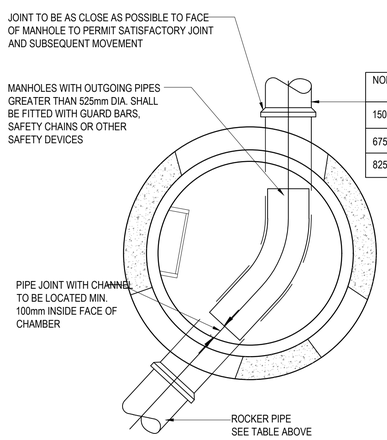

NOMINAL DIA. (mm)	EFFECTIVE LENGTH (m)
150 TO 600	0.6
675 TO 750	1.0
825 & OVER	1.25

P.C.C. CHAMBER RINGS USED FOR MANHOLES LESS THAN 1500 TO SOFFIT WITHIN HIGHWAYS FOR LOAD CLASS D 400 SHALL BE 600mm x 600mm CLEAR OPENING. ALL MAINTENANCE SHALL BE CARRIED OUT FROM THE SURFACE. NO STEP RUNGS SHALL BE PROVIDED. THE COVER OPENING SHALL BE LOCATED OVER THE OUTGOING PIPE.

TYPICAL MANHOLE DETAIL TYPE B (E/F) DEPTH TO SOFFIT OF PIPE 1.5m* TO 3.0m

[SCALE 1:20]

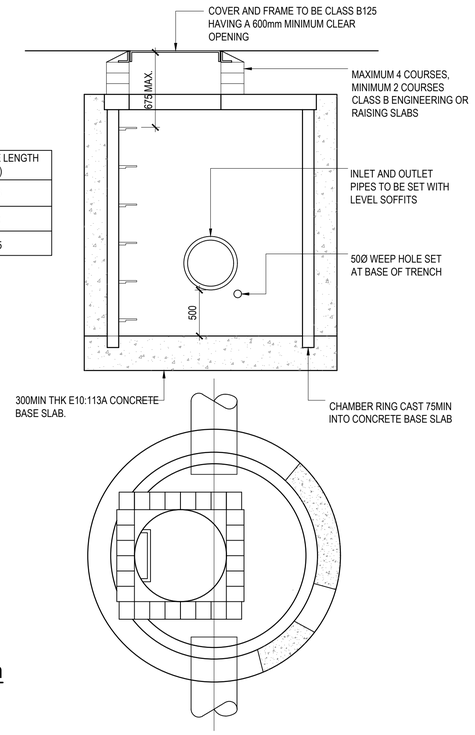

TYPICAL CATCHPIT MANHOLE PLAN & SECTION

(CHAMBER CONSTRUCTION AS FOR PCC MANHOLES)

[SCALE 1:20]

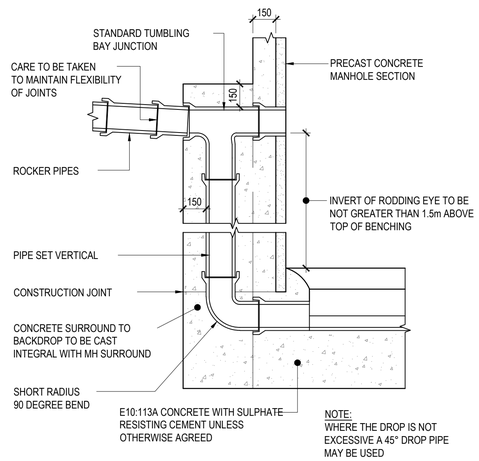

NOTE:
WHERE THE DROP IS NOT EXCESSIVE A 45° DROP PIPE MAY BE USED

TYPICAL VERTICAL BACKDROP DETAIL

[SCALE 1:20]

Rev.	Amendment	Date	By	Chkd
P01	FIRST ISSUE.	01.09.23	DB	LoG

Project
LORETO COLLEGE,
NEW BUILD PROBATION LAND

ARCH/CLIENT
LORETO COLLEGE

Title
TYPICAL DRAINAGE DETAILS
SHEET 1

WML Job No.	Drawn	Checked	Date	Scale
10939	DB	LoG	SEPT 2023	1:20 @ A1

WML CONSULTING
Civil, Structural & Geotechnical Engineers
No.8 Oak Green
Earl Road
Stanley Green Business Park
Cheadle Hulme
Cheshire SK8 6QL
Tel 0161 482 0600
Fax 0161 486 9210
e-mail info@wmlconsulting.com
www.wmlconsulting.com

Drawing No.

Project	Originator	Volume	Level	Type	Role	Number	Rev
LCNP	WML	00	FN	DR	D	5230	P01