FIXED SEATING TO BE FREE-STANDING
WITH NO FIXINGS TO BUILDING FABRIC

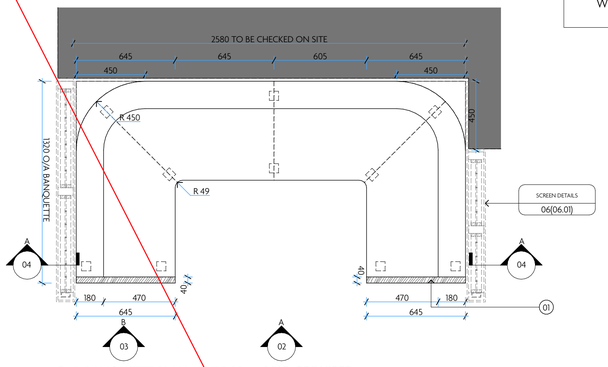

01 BANQUETTE PLAN - TYPE 05
1:20 @ A1

1 NO. REQUIRED

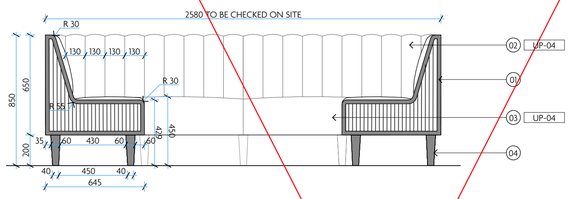

02 BANQUETTE FRONT ELEVATION A - TYPE 05
1:20 @ A1

OMITTED

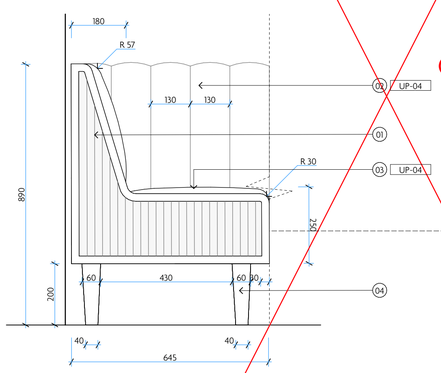

03 BANQUETTE GABLE ELEVATION B - TYPE 05
1:10 @ A1

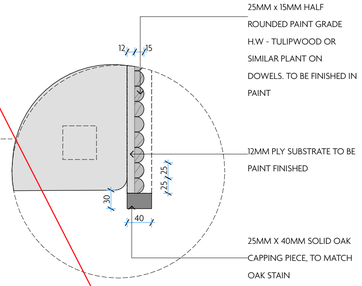

A DETAIL A
1:5 @ A1

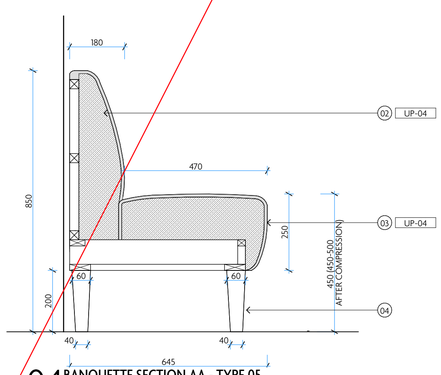

04 BANQUETTE SECTION AA - TYPE 05
1:10 @ A1

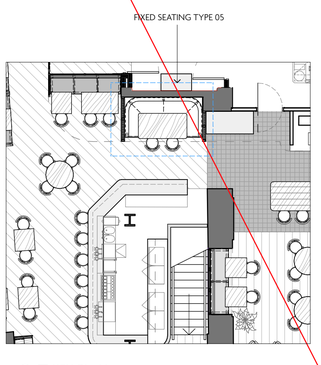

05 KEY PLAN
1:100 @ A1

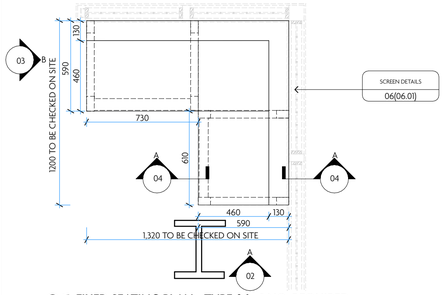

01 FIXED SEATING PLAN - TYPE 06
1:20 @ A1

1 NO. REQUIRED

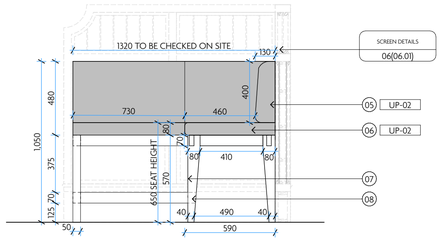

02 FIXED SEATING ELEVATION A - TYPE 06
1:20 @ A1

REFERENCE IMAGE FIXED SEATING TYPE 06

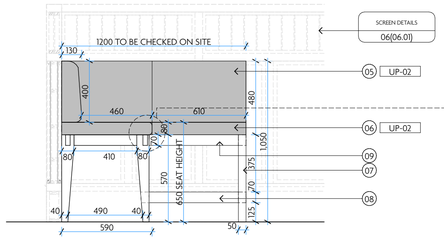

03 FIXED SEATING ELEVATION B - TYPE 06
1:20 @ A1

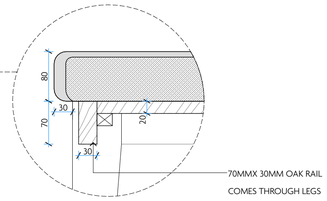

B DETAIL B
1:5@ A1

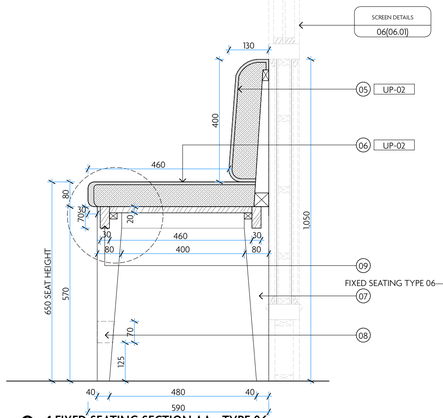

04 FIXED SEATING SECTION AA - TYPE 06
1:10 @ A1

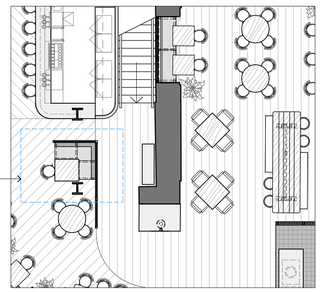

05 KEY PLAN
1:100 @ A1

UPHOLSTERY KEY:

ALL FABRIC/LEATHER TO ACHIEVE CRIB 5 FIRE RATING

UP-02

UPHOLSTERED:
SUPPLIER: FUTURA LEATHER
RANGE: SELVAGGIO VERDE

UP-04

UPHOLSTERED:
SUPPLIER: ILP LEATHER
RANGE: LAGUNA TAN IN LAGUNA COLLECTION

UP-01

UPHOLSTERED:
SUPPLIER: STUDIOTEX LTD
RANGE: CROSSGRAIN IN COLOUR RED OAK
REF: 4089-08

FIXED SEATING TO BE FREE-STANDING
WITH NO FIXINGS TO BUILDING FABRIC

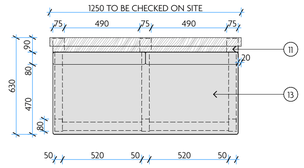

01 FIXED SEATING PLAN - TYPE 07
1:20 @ A1

1 NO. REQUIRED

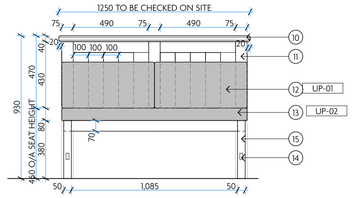

02 FIXED SEATING ELEVATION A - TYPE 07
1:20 @ A1

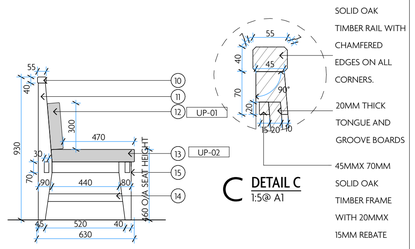

55MM X 40MM SOLID OAK TIMBER RAIL WITH CHAMFERED EDGES ON ALL CORNERS.

20MM THICK TONGUE AND GROOVE BOARDS

45MMX 70MM SOLID OAK TIMBER FRAME WITH 20MMX 15MM REBATE

C DETAIL C
1:5@ A1

03 FIXED SEATING ELEVATION B - TYPE 07
1:20 @ A1

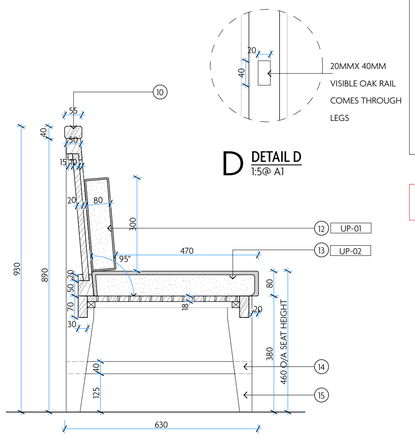

20MMX 40MM VISIBLE OAK RAIL COMES THROUGH LEGS

D DETAIL D
1:5@ A1

04 FIXED SEATING SECTION AA - TYPE 07
1:10 @ A1

GENERAL NOTES:

DO NOT SCALE: ALL DIMENSIONS MUST BE CHECKED AND VERIFIED ON SITE.

ALL DIMENSIONS ARE IN MILLIMETRES UNLESS NOTED OTHERWISE.

THE CONTRACTOR SHALL TAKE THEIR OWN DIMENSIONS AND SHALL BE RESPONSIBLE FOR THE ACCURATE ADJUSTMENT OF ANY FITTING TOGETHER OF VARIOUS PARTS.

ALL WORKS TO BE CARRIED OUT IN ACCORDANCE WITH THE CURRENT BRITISH STANDARDS, B.S. CODES OF PRACTICE AND BUILDING REGULATIONS.

CONSTRUCTION DRAWINGS TO BE SUPPLIED WITH SAMPLES OF ALL FINISHES AND MATERIALS, TO BE APPROVED BY MACAULAY SINCLAIR PRIOR TO FABRICATION/PROCUREMENT.

SITE SURVEY REQUIRED - ALL DIMENSIONS ARE INDICATIVE ONLY.

1 METER SAMPLE SECTION OF SEATING REQUIRED IN SIMILAR PROPOSED UPHOLSTERY FOR FINAL APPROVAL BY CLIENT AND MACAULAY SINCLAIR.

ALL FIXED SEATING TO BE BY SPECIALIST.

NOTES:

1. TIMBER END GABLES WITH INSET PANEL TO HAVE FINGER PANELLING (APPLIED AS PER DETAIL A) TO BE PAINT FINISHED
2. FULLY UPHOLSTERED FLUTED BACK REST WITH EQUAL SPACING AND NO LARGER THAN 130MM. ALL SEAMS TO BE STITCHED IN MATCHING THREAD. SEAT PAD SPLITS TO LINE THROUGH WITH FLUTE
3. CMFR FOAM SEAT PAD TO BE FORMED IN EQUAL SECTIONS AS INDICATED, SEAT PAD TO BE WRAPPED IN LEATHER FRONT TO BACK TO AVOID SEAM ON FRONT EDGE. ENDS TO BE FINISHED WITH LEATHER CUT TO SUIT FOAM PROFILE AND SEAM FINISHED IN TOP-STITCHED.
4. 60MM SOLID OAK SQUARE LEGS TAPERING DOWN TO 40MM.
5. TAPERED CMFR FOAM LEATHER UPHOLSTERED BACK PADS FORMED IN SECTIONS. TO LINE THROUGH WITH SEAT PAD. ENDS TO BE FINISHED WITH LEATHER PANEL CUT TO SUIT FOAM PROFILE
6. SEAT PAD TO BE FORMED IN EQUAL SECTIONS AS INDICATED, LEATHER TO WRAP STITCHED END PANEL TO CUSHION. TO BE FINISHED WITH LEATHER CUT TO SUIT FOAM PROFILE AND SEAM FINISHED IN TOP-STITCHED.
7. TAPERED FRONT & BACK LEGS TAPERING DOWN FROM 80MMX 50MM TO 40MMX 50MM WIDTH.
8. 70MMX 40MM FOOT RAIL CONSTRUCTED IN SOLID OAK. RAIL TO BE FORMED 125MM FROM F.F.L. REFER TO DETAIL B
9. 30MMX 70MM OAK RAIL TO FRONT OF FIXED SEAT. JOINT TO COME THROUGH LEGS. REFER TO DETAIL C
10. 40MMX 55MM SOLID OAK TIMBER RAIL WITH CHAMFERED EDGES.
11. 90MM DEPTH SOLID OAK TAPERED LEGS TO BACK OF FIXED SEATING.
12. HEAVY FEATHER FILLED CUSHIONS TO BE UPHOLSTERED, ALL SEAMS TO BE TOP-STITCHED IN MATCHING THREAD. SEAT PAD STITCHING AS INDICATED
13. SEAT PAD TO BE WRAPPED IN LEATHER FRONT TO BACK TO AVOID SEAM ON FRONT EDGE. ENDS TO BE FINISHED WITH LEATHER CUT TO SUIT FOAM PROFILE AND SEAM FINISHED IN TOP-STITCHED.
14. 30MMX 70MM RAIL TO FRONT & BACK OF FIXED SEAT WITH VISIBLE MORTISE AND TENON JOINT
15. 80MM DEPTH SOLID OAK TAPERED LEGS TO FRONT OF FIXED SEATING.

OAK FINISH : MID OAK STAIN WITH 10% LACQUER - SAMPLE TO BE APPROVED

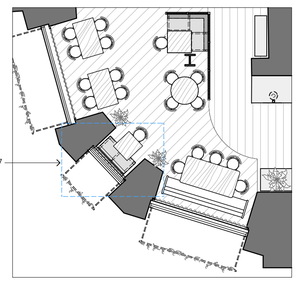

05 KEY PLAN - TYPE 07
1:10 @ A1

REV	DATE	REASON

REV	DATE	REASON
A	31.10.2023	Booth omitted

NOTES

Do not scale from this drawing. All dimensions to be checked on site prior to any manufacture and construction.

Copyright Reserved

Macaulay Sinclair

+44 (0)115 950 7313
STUDIO@MACAULAYSINCLAIR.COM
MACAULAYSINCLAIR.COM

PROJECT	Flat Iron Manchester	PROJ NO.	3809
TITLE	GF Fixed Seating Details Page 2		
SCALE @ A1	1:20/ 1:5/ 1:10 @A1	DWG NO.	03(24) REV A
DATE	02/02/2023 DRAWN BY FP	STATUS	PLANNING