smart
architectural aluminium

Alitherm Heritage

The ideal window and door solution for heritage applications such as listed building renovations where planning regulations demand a like-for-like replacement window with optimum thermal performance.

- Window Energy Rating B
- U Value 1.6 W/m^{2}K
- BS 6375 Part 1: 2009
  Resistance to Weather

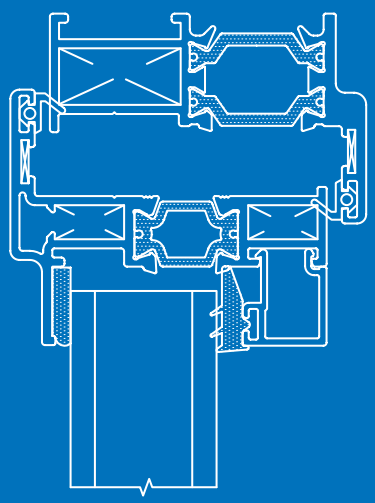

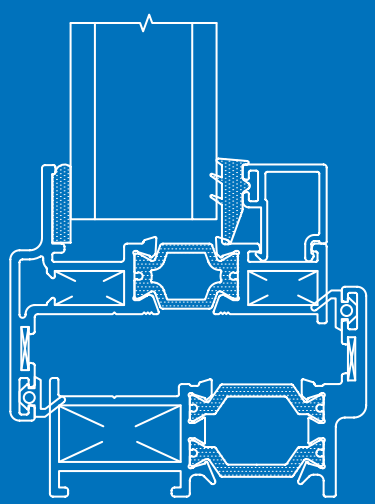

Alitherm Heritage Window

Alitherm Heritage provides the ideal solution for heritage applications such as listed building renovations and large scale replica-refurbishment projects where planning constraints are to be considered.

The Alitherm Heritage window is designed to be built as a series of horizontal modules which can be stacked using horizontal couplers to form a multi-part window featuring a specially design drip bar between modules.

Application

- Fixed windows
- Single or double sash open out casements
- Top hung open out casements

Features

- Polyamide thermal break provides enhanced thermal performance
- Designed as a direct replacement for steel windows

Finish

Single or dual colour, marine quality polyester powder coat as standard

Technical Performance

WER Rating	B
U Value	1.6 W/m²K
Air	Class 3, 600pa
Water	Class AE, 2400pa
Wind	Class E1050
Doc L 2010	Yes

Dimensions

Frame Depth	47mm
Glass	24mm

Test Certification

BS 6375 Part 1: 2009 Resistance to Weather

Recommended Design Limits

Side Hung Vent Max o/a width: 700mm

Side Hung Vent Min o/a width: 300mm

Side Hung Vent Max o/a height: 1400mm

Maximum Vent weight: 24kg

Top Hung Vent Max o/a width: 1400mm

Top Hung Vent Max o/a height: 1200mm

Top Hung Vent Min o/a height: 220mm

Maximum Vent weight: 35kg

Alitherm Heritage Door

The Smart Alitherm Heritage door is the ideal replacement for steel balcony doors on heritage applications such as building renovations or apartment conversions. The Alitherm Heritage door provides the solution for conservation areas where planning regulations require a like-for-like product replacement. Alitherm Heritage door profiles feature the system's signature slim sightlines and elegant lines that complement Smart's existing Alitherm Heritage window and mimic those of steel doors. The system has all the advantages of modern aluminium profiles that feature Polyamide thermal breaks, allowing the system to achieve a U Value of 1.8 W/m²K when installed with a suitable sealed unit.

Application

- Single or double doors

Features

- Slim sightlines
- Tape or gasket glazed
- Single point locking and face mounted shoot bolts

Technical Performance

U Value	1.8 W/m²K (using suitable glass unit)
Air	Test result pending
Water	Test result pending
Wind	Test result pending
Glass	24mm – 32mm
Typical Sightlines	59mm

Recommended Design Limits

Max Width	900mm
Max Height	2100mm

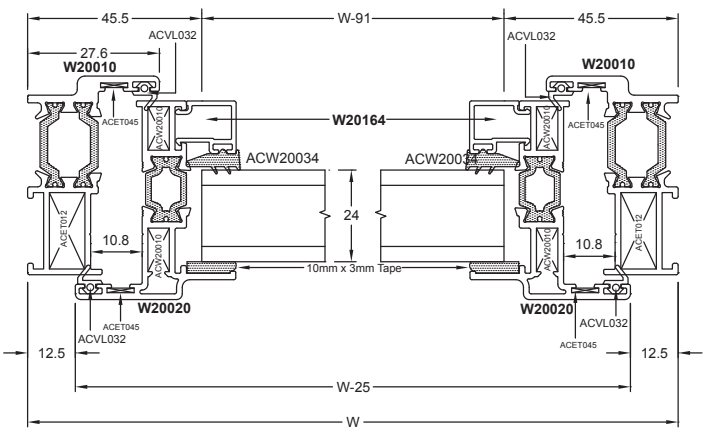

smart
architectural aluminium

Smart Systems Limited Arnolds Way, Yatton, North Somerset BS49 4QN. UK
Tel +44 (0)1934 876100 Fax +44 (0)1934 835169 sales@smartsystems.co.uk www.smartsystems.co.uk

Images and drawings are for illustrative purposes only and are not binding in specification, colour or detail.