Appendix E Proforma for Planning Applications

MANCHESTER
CITY COUNCIL

Planning Application – Waste Management Strategy

Planning Application Number:
Date Submitted: **11.10.2023**

Estimated volumes/ m^2 required by the development

Low Rise Domestic

Waste Types	Capacity Required (litres)	Number of bins required per household	Confirm what is to be provided
General refuse	140 / 240	1 x wheeled bin	
Pulpable Recycling	140 / 240	1 x wheeled bin	
Mixed Recycling	140 / 240	1 x wheeled bin	
Garden Waste	140 / 240	1 x wheeled bin	
Food Waste	23	1 x 23 litre caddy	

High Rise Apartment Developments

	Yes/No - how much space has been provided?
$0.43m^2$ has been provided per apartment for the container space. Space to manoeuvre and access containers individually has also been provided so that each container can be accessed and removed for collection individually.	

Commercial Developments

Please state number of bins you propose, showing calculations where appropriate.

General Waste - Pulpable Recycling - Mixed Recycling - Food Waste - Industrial Waste -

Has / will a contract be obtained with a licenced waste carrier?	☐

Mixed Use Developments

Are the stores for residential and commercial separate from each other?	☐

Internal Stores (Residential and Commercial)

Please provide details of internal stores / segregation of waste and recycling.

Retal Shop 1 x Wheelie Euro Bin 1100Ltr - General Waste Flat 1 and 2 3 x Wheelie Euro Bin 360Ltr -Recycle Pulpable -Food Waste -Mixed Recycle

Storage Areas for Waste Containers (Residential and Commercial)

Please provide details of container stores, attaching plans if appropriate.

Existing rear yard store - Light timber canopy/shed see Waste management strategy plan dwg. A101

Ensure all bins in the store are accessible	☒
Ensure recycling facilities are as easy to access as general refuse	☒

Please confirm details of waste store ventilation and hygiene / cleaning proposals

Ventilation -	**Sides of bin storage is open , ample natural airflow**
Hygiene -	**Hard surface - to be jet washed and cleared of any rubbish frequently to avoid litter and dirt build up**

Please provide details of who will be responsible for placing the bins at the collection point and returning them to the store / property promptly e.g. resident / management company

Shop manager/trained staff

Please ensure that you have attached:

Detailed plans of waste stores	☒
Location plans showing stores	☒
Location plans showing the proposed collection point and the route the collection vehicle will take	☒

Please ensure that you have completed this form in accordance with our GD04 Waste Storage and Collection Guidance for New Developments

020 8776 8957
sales@britishbins.co.uk
www.britishbins.co.uk

1100 ltr Wheelie Bin Specification Sheet

Features

- Manufactured and tested to EN840 - DIN30700. (EN840 is the Europe wide standard for emptying interoperability and handling safety).
- Extra strength comb lift bar.
- Made from HDPE (High –density Polyethylene) for extra strength and life.
- Full thickness “flat body” design (Some other bins, with “fluted bodies” that are much thinner, won’t last as long).
- Maximum strength additives for resistance to UV, cold, heat and chemicals. (No corners cut).
- High strength Trunnions (Din Lifting Side Lugs) supplied as standard.
- Certified compliant with EU the noise protection Directive.
- 100% recyclable at end of life.

Specifications

- Weights:- Rated maximum load 450kg. Dead weight 58kg
- Dimensions:-

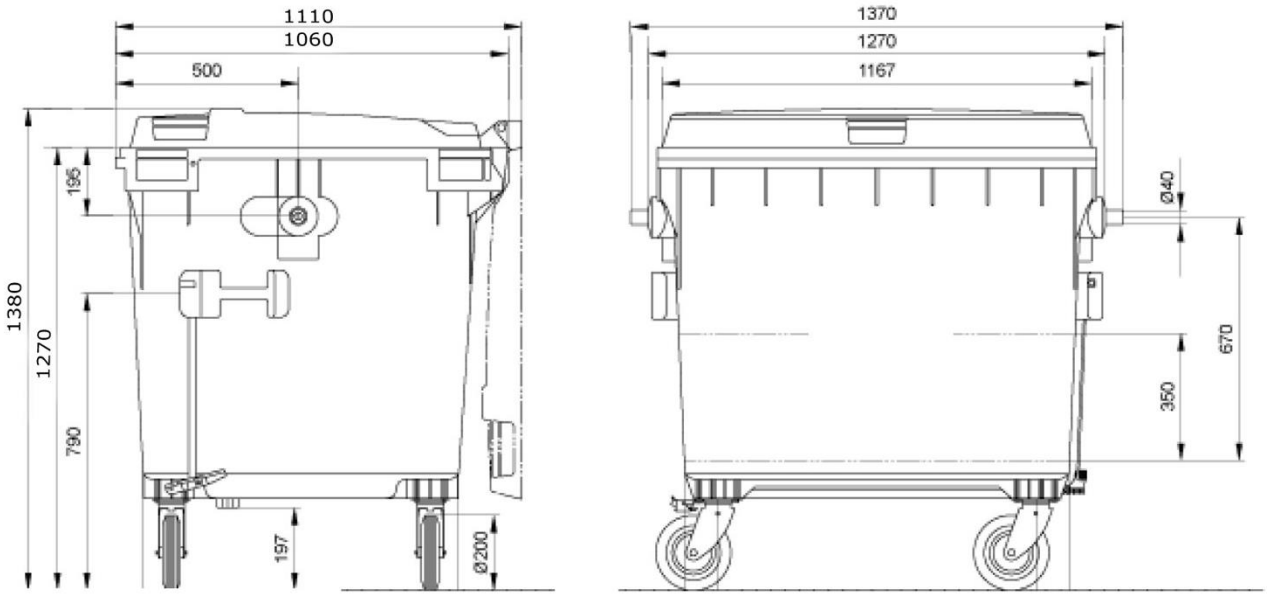

- **Standard Colours:-**
  Other colours are available for orders of 100+ units

Antracite Grey R7016
Reseda Green R6011
Traffic Red R3020
Sky Blue R5015
Zinc Yellow R1018

© BritishBins - London

020 8776 8957
sales@britishbins.co.uk
www.britishbins.co.uk

360 ltr Wheelie Bin Specification Sheet

Features

- Manufactured and tested to EN840 - DIN30700. (EN840 is the Europe wide standard for emptying interoperability and handling safety).
- Extra strength comb lift bar.
- Made from virgin material only for extra strength and life.
- Full thickness “flat body” design (Some other bins, with “fluted bodies” that are much thinner, won’t last as long).
- Maximum strength additives for resistance to UV, cold, heat and chemicals. (No corners cut).
- Solid steel galvanised wheel axle with solid wheel tyres.
- Certified compliant with EU the noise protection Directive.
- 100% recyclable at end of life.

Specifications

- Weights:- Rated maximum load 160kg. Dead weight 20kg
- Dimensions:-

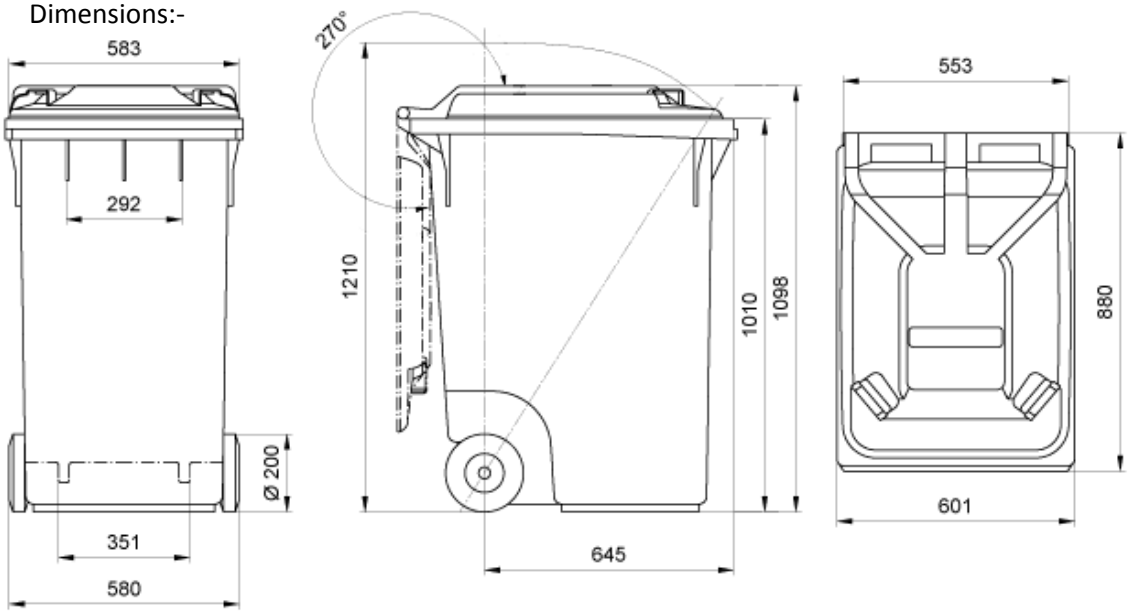

- **Standard Colours:-**
  Other colours are available for orders of 1,000+ units

Antracite Grey R7016
Reseda Green R6011
Traffic Red R3020
Sky Blue R5015
Zinc Yellow R1018

© BritishBins - London