MR46 Datasheet

High-Performance 802.11ax Wireless

The Cisco Meraki MR46 is a cloud-managed 4x4:4 802.11ax access point that raises the bar for wireless performance and efficiency. Designed for next-generation deployments in offices, schools, hospitals, shops, and hotels, the MR46 offers high throughput, enterprise-grade security, and simple management.

The MR46 provides a maximum of 2.98 Gbps* aggregate frame rate with concurrent 2.4 GHz and 5 GHz radios. A dedicated third radio provides real-time WIDS/WIPS, with automated RF optimization. A fourth integrated radio delivers Bluetooth scanning and beaconing.

With the combination of cloud management, high-performance hardware, multiple radios, and advanced software features, the MR46 makes an outstanding platform for the most demanding of uses—including high-density deployments and bandwidth or performance-intensive applications like voice and high-definition video.

MR46 and Meraki Cloud Management

Management of the MR46 is performed through the Meraki cloud, with an intuitive browser-based interface that enables rapid deployment without time-consuming training or costly certifications. Because the MR46 is self-configuring and managed over the web, it can be deployed at a remote location in a matter of minutes, even without on-site IT staff.

24x7 monitoring via the Meraki cloud delivers real-time alerts if a network encounters problems. Remote diagnostic tools enable immediate troubleshooting over

the web so that distributed networks can be managed with a minimum of hassle.

The MR46's firmware is automatically kept up-to-date via the cloud. New features, bug fixes, and enhancements are delivered seamlessly over the web. This means no manual software updates to download or missing security patches to worry about.

Product Highlights

- 4x4:4 MU-MIMO 802.11ax
- 2.98* Gbps dual-radio aggregate frame rate
- 24x7 real-time WIDS/WIPS and spectrum analytics via dedicated third radio
- Integrated Bluetooth Low Energy beacon
- Integrated scanning radio
- Enhanced transmit power and receive sensitivity
- Integrated enterprise security and guest access
- Application-aware traffic shaping
- Optimized for voice and video
- Self-configuring, plug-and-play deployment
- Sleek design blends into office environments
- Full-time Wi-Fi location tracking via dedicated third radio

Features

Dual–radio aggregate frame rate of up to 2.98 Gbps*
The 5 GHz 4x4:4 radio and the 2.4 GHz 4x4:4 radio offer a combined dual-radio aggregate frame rate of 2.98 Gbps*, with up to 2,402 Mbps in the 5 GHz band and 574 Mbps in the 2.4 GHz band. Technologies like transmit beamforming and enhanced receive sensitivity allow the MR46 to support a higher client density than typical enterprise-class access points, resulting in better performance for more clients from each AP.

* Refers to maximum over-the-air data frame rate capability of the radio chipset, and may exceed data rates allowed by IEEE 802.11ax operation.

Multi-user multiple input multiple output (MU-MIMO)
With support for features of 802.11ax, the MR46 offers MU-MIMO and OFDMA for more efficient transmission to multiple clients. Especially suited to environments with numerous mobile devices, MU-MIMO enables multiple clients to receive data simultaneously. This increases the total network performance and improves the end user experience.

Dedicated third radio delivers 24x7 wireless security and RF analytics
The MR46's dedicated dual-band scanning and security radio continually assesses the environment, characterizing RF interference and containing wireless threats like rogue access points. There's no need to choose between wireless security, advanced RF analysis, and serving client data. A dedicated third radio means that all functions occur in real time without any impact to client traffic or AP throughput.

Bluetooth Low Energy beacon and scanning radio
An integrated fourth Bluetooth® radio provides seamless deployment of Bluetooth Low Energy beacon functionality and effortless visibility of Bluetooth® devices. The MR46 enables the next generation of location-aware applications while future-proofing deployments, ensuring it's ready for new customer engagement strategies.

Automatic cloud-based RF optimization
The MR46's sophisticated and automated RF optimization means there is no need for the dedicated hardware and RF expertise typically required to tune a wireless network. The RF data collected by the dedicated third radio is continuously fed back to the Meraki cloud. This data is then used to automatically tune the channel selection, transmit power, and client connection settings for optimal performance under even the most challenging RF conditions.

Integrated enterprise security and guest access

The MR46 features integrated, easy-to-use security technologies to provide secure connectivity for employees and guests. Advanced security features, such as AES hardware-based encryption and Enterprise authentication with 802.1X and Active Directory integration, provide wired-like security while still being easy to configure. One-click guest isolation provides secure, internet-only access for visitors. PCI compliance reports check network settings against PCI requirements to simplify secure retail deployments.

Enterprise mobility management (EMM) and mobile device management (MDM) integration
Meraki Systems Manager natively integrates with the MR46 to offer automatic, context-aware security. Systems Manager's self-service enrollment helps to rapidly deploy MDM without installing additional equipment, and then dynamically tie firewall and traffic-shaping policies to client posture.

Application-aware traffic shaping
The MR46 includes an integrated layer 7 packet inspection, classification, and control engine, enabling the configuration of QoS policies based on traffic type, helping to prioritize mission-critical applications while setting limits on recreational traffic like peer-to-peer and video streaming. Policies can be implemented per network, per SSID, per user group, or per individual user for maximum flexibility and control.

Voice and video optimizations
Industry-standard QoS features are built-in and easy to configure. Wireless multimedia (WMM) access categories, 802.1p, and DSCP standards support and ensure important applications get prioritized correctly, not only on the MR46, but on other devices in the network. Unscheduled automatic power save delivery (U-APSD) and new target wait time features in 802.11ax clients ensure minimal battery drain on wireless VoIP phones.

Self-configuring, self-maintaining, always up-to-date
When plugged in, the MR46 automatically connects to the Meraki cloud, downloads its configuration, and joins the appropriate network. If new firmware is required, this is retrieved by the AP and updated automatically. This ensures the network is kept up-to-date with bug fixes, security updates, and new features.

Advanced analytics
Drilling down into the details of network usage provides highly granular traffic analytics. Visibility into the physical world can be enhanced with journey tracking through location analytics. Visitor numbers, dwell time, repeat visit rates, and track trends can all be easily monitored in the dashboard and deeper analysis is enabled with raw data available via simple APIs.

Specifications

Category	Specifications
Radios	• 2.4 GHz 802.11b/g/n/ax client access radio • 5 GHz 802.11a/n/ac/ax client access radio • 2.4 GHz and 5 GHz dual-band WIDS/WIPS, spectrum analysis, and location analytics radio • 2.4 GHz Bluetooth Low Energy (BLE) radio with beacon and scanning support • Concurrent operation of all four radios • Supported frequency bands (country-specific restrictions apply): ◦ 2.401 - 2.484 GHz ◦ 5.150 - 5.250 GHz (UNII-1) ◦ 5.250 - 5.350 GHZ (UNII-2A) ◦ 5.490 - 5.730 GHz (UNII-2C) ◦ 5.735 -5.825 GHz (UNII-3)
Antenna	• Internal antenna (5.4 dBi gain at 2.4 GHz, 6 dBi gain at 5 GHz)
802.11ax, 802.11ac Wave 2 and 802.11n Capabilities	• DL-OFDMA**, UL-OFDMA**, TWT support**, BSS coloring** • 4 x 4 multiple input, multiple output (MIMO) with four spatial streams

	• SU-MIMO, UL MU-MIMO**, and DL MU-MIMO support • Maximal ratio combining (MRC) & beamforming • 20 and 40 MHz channels (802.11n); 20, 40, and 80 MHz channels (802.11ac Wave 2); 20, 40 and 80 MHz channels (802.11ax) • Up to 1024-QAM on both 2.4 GHz and 5 GHz bands • Packet aggregation ** Feature is automatically enabled via firmware update to MR 27+
Power	• Power over Ethernet: 42.5 - 57 V (802.3at compliant) • Alternative: 12 V DC input • Power consumption: 30W max (802.3at **required**) • Power over Ethernet injector and DC adapter sold separately **Note:** Actual power consumption may vary depending on the AP usage.
Interfaces	• 1x 100/1,000/2.5G BASE-T Ethernet (RJ45) • 1x DC power connector (5.5 mm x 2.5 mm, center positive)
Mounting	• All standard mounting hardware included • Desktop, ceiling, and wall mount capable • Ceiling tile rail (9/16, 15/16 or 1 1⁄2” flush or recessed rails), assorted cable junction boxes • Bubble level on mounting cradle for accurate horizontal wall mounting
Physical Security	• Two security screw options (included) (13.5 mm long, 2.5 mm diameter, 5 mm head) • Kensington lock hard point • Concealed mount plate with anti-tamper cable bay
Environment	• Operating altitude: Up to 40,000 feet (12,192 meters) • Operating temperature: 32 °F to 104 °F (0 °C to 40 °C) • Humidity: 5% to 95% non-condensing
Reliability	• Mean time between failure (MTBF): 1,406,652 hrs at +25°C operating temperature
Physical Dimensions	• 12.05” x 5.06” x 1.74” (30.6 cm x 12.84 cm x 4.43 cm), not including desk mount feet or mount plate • Weight: 28.22 oz (800 g)
Security	• Integrated layer 7 firewall with mobile device policy management

	• Real-time WIDS/WIPS with alerting and automatic rogue AP containment with Air Marshal • Flexible guest access with device isolation • VLAN tagging (802.1q) and tunneling with IPsec VPN • PCI compliance reporting • WEP*, WPA, WPA2-PSK, WPA2-Enterprise with 802.1X, WPA3 - Personal**, WPA3 - Enterprise**, WPA3 - Enhanced Open (OWE)*** • EAP-TLS, EAP-TTLS, EAP-MSCHAPv2, EAP-SIM • TKIP and AES encryption • Enterprise mobility management (EMM) and Mobile device management (MDM) integration • Cisco ISE integration for guest access and BYOD posturing * Feature can be enabled by contacting support ** Feature supported on firmware MR 27+ and can be made available on MR 26; see the WPA3 article for more information *** Feature will be made available via a future software update
Quality of Service	• Advanced power save (U-APSD) • WMM access categories with DSCP and 802.1p support • Layer 7 application traffic identification and shaping
Mobility	• PMK, OKC, and 802.11r for fast layer 2 roaming • Distributed or centralized layer 3 roaming
Analytics	• Embedded location analytics reporting and device tracking • Global layer 7 traffic analytics reporting per network, per device, and per application
LED Indicators	• 1 power/booting/firmware upgrade status
Regulatory	• RoHS • For additional country-specific regulatory information, please contact Meraki sales
Warranty	• Lifetime hardware warranty with advanced replacement included
Ordering Information	• MR46-HW: Meraki MR46 cloud managed 802.11ax AP • MA-PWR-30W-XX: Meraki AC adapter for MR series (XX = US/EU/UK/AU) • MA-INJ-4: Meraki MR 802.3at PoE Injector (Power Cord Not Included) • MA-INJ-6: Meraki MR MultiGigabit 802.3bt Injector (Power Cord Not Included) • Note: Meraki access point license required

Compliance and Standards

Category	Standards
IEEE Standards	• 802.11a, 802.11ac, 802.11ax, 802.11b, 802.11e, 802.11g, 802.11h, 802.11i, 802.11k, 802.11n, 802.11r, and 802.11u* * Feature can be enabled by contacting support; see the Hotspot 2.0 article for more information
Safety Approvals	• CSA and CB 60950 & 62368 • Conforms to UL 2043 (plenum rating)
Radio Approvals	• Canada: FCC part 15C, 15E, RSS-247 • Europe: EN 300 328, EN 301 893 • Australia/NZ: AS/NZS 4268 • Mexico: IFT, NOM-208 • Taiwan: NCC LP0002 • For additional country-specific regulatory information, please contact Meraki sales
EMI Approvals (Class B)	• Canada: FCC part 15B, ICES-003 • Europe: EN 301 489-1-17, EN 55032, EN 55024 • Australia/NZ: CISPR 22 • Japan: VCCI
Exposure Approvals	• Canada: FCC part 2, RSS-102 • Europe: EN 50385, EN 62311, EN 62479 • Australia/NZ: AS/NZS 2772
EMC	• EN 61000

Context and Comparisons

802.11ax, 802.11ac Wave 2, and 802.11n Capabilities

MR36	MR44	MR46	MR56
DL-OFDMA, UL-OFDMA, TWT support, BSS coloring	DL-OFDMA, UL-OFDMA, TWT support, BSS coloring	DL-OFDMA, UL-OFDMA, TWT support, BSS coloring	DL-OFDMA, UL-OFDMA, TWT support, BSS coloring

2 x 2 multiple input, multiple output (MIMO) with two spatial streams	2.4 GHz: 2 x 2 multiple input, multiple output (MIMO) with two spatial streams 5 GHz: 4 x 4 multiple input, multiple output (MIMO) with four spatial streams	4 x 4 multiple input, multiple output (MIMO) with four spatial streams	8 x 8 multiple input, multiple output (MIMO) with eight spatial streams on 5 GHz 4 x 4 multiple input, multiple output (MIMO) with four spatial streams on 2.4 GHz
Maximal ratio combining (MRC) and beamforming	Maximal ratio combining (MRC) and beamforming	Maximal ratio combining (MRC) and beamforming	Maximal ratio combining (MRC) and beamforming
SU-MIMO, UL MU-MIMO, and DL MU-MIMO support	SU-MIMO, UL MU-MIMO, and DL MU-MIMO support	SU-MIMO, UL MU-MIMO, and DL MU-MIMO support	SU-MIMO, UL MU-MIMO, and DL MU-MIMO support
20 and 40 MHz channels (802.11n); 20, 40, and 80 MHz channels (802.11ac wave 2); 20, 40 and 80 MHz channels (802.11ax)	20 and 40 MHz channels (802.11n); 20, 40, and 80 MHz channels (802.11ac wave 2); 20, 40 and 80 MHz channels (802.11ax)	20 and 40 MHz channels (802.11n); 20, 40, and 80 MHz channels (802.11ac wave 2); 20, 40 and 80 MHz channels (802.11ax)	20 and 40 MHz channels (802.11n); 20, 40, and 80 MHz channels (802.11ac wave 2); 20, 40 and 80MHz channels (802.11ax)
Up to 1024-QAM on both 2.4 GHz and 5 GHz bands	Up to 1024-QAM on both 2.4 GHz and 5 GHz bands	Up to 1024-QAM on both 2.4 GHz and 5 GHz bands	Up to 1024-QAM on both 2.4 GHz and 5 GHz bands
Packet aggregation	Packet aggregation	Packet aggregation	Packet aggregation

Power

MR36	MR44	MR46	MR56
Power over Ethernet: 37 - 57 V (802.af compliant)	Power over Ethernet: 42.5 - 57 V (802.3at) **or** 37 - 57 V (802.3af) - low power mode **	Power over Ethernet: 42.5 - 57 V (802.3at compliant)	Power over Ethernet: 42.5 - 57 V (802.3at compliant)
Alternative: 12 V DC input	Alternative: 12 V DC input	Alternative: 12 V DC input	Alternative: 12 V DC input
Power consumption: 15W max (802.3af)	Power consumption: 30W max (802.3at) **or** 15W max (802.3af) - low power mode **	Power consumption: 30W max (802.3at **required**)	Power consumption: 30W max (802.3at **required**)
Power over Ethernet injector and DC adapter sold separately	Power over Ethernet injector and DC adapter sold separately	Power over Ethernet injector and DC adapter sold separately	Power over Ethernet injector and DC adapter sold separately

Note:

Actual power consumption may vary depending on the AP usage.

** Feature available via firmware update to MR 27.6+. Please see our Low Power Mode article for more information.

Interfaces

MR36	MR44	MR46	MR56
1x 10/100/1000 BASE-T Ethernet (RJ45)	1x 100/1000/2.5G BASE-T Ethernet (RJ45)	1x 100/1000/2.5G BASE-T Ethernet (RJ45)	1x 100/1000/2.5G/5G BASE-T Ethernet (RJ45)
1x DC power connector (5.5 mm x 2.5 mm, center positive)	1x DC power connector (5.5 mm x 2.5 mm, center positive)	1x DC power connector (5.5 mm x 2.5 mm, center positive)	1x DC power connector (5.5 mm x 2.5 mm, center positive)

Physical Dimensions

MR36	MR44	MR46	MR56
9.84” x 4.72” x 1.42” (25 cm x 12 cm x 3.6 cm), not including desk mount feet or mount plate	12.05" × 5.06" × 1.74" (30.6 cm × 12.84 cm × 4.43 cm), not including desk mount feet or mount plate	12.05” x 5.06” x 1.74” (30.6 cm x 12.84 cm x 4.43 cm), not including desk mount feet or mount plate	12.83” x 5.54” x 1.76” (32.6 cm x 14.079 cm x 4.47 cm), not including desk mount feet or mount plate
Weight: 17.35 oz (492 g)	Weight: 26.07 oz (739 g)	Weight: 28.22 oz (800 g)	Weight: 35.27 oz (1 kg)

RF Performance Table

2.4 GHz

Operating Band	Operating Mode	Data Rate	TX Power (conducted)
2.4 GHz	802.11b	1 Mb/s	26.0
		2 Mb/s	26.0
		5.5 Mb/s	26.0

		11 Mb/s	26.0
2.4 GHz	802.11g	6 Mb/s	26.0
		9 Mb/s	26.0
		12 Mb/s	24.0
		18 Mb/s	24.0
		24 Mb/s	23.0
		36 Mb/s	23.0
		48 Mb/s	22.0
		54 Mb/s	22.0
2.4 GHz	802.11n (HT20)	MCS0	26.0
		MCS1	26.0
		MCS2	24.0
		MCS3	24.0
		MCS4	24.0
		MCS5	22.0
		MCS6	22.0
		MCS7	21.0
2.4 GHz	802.11ac (VHT20)	MCS0	26.0
		MCS1	26.0

		MCS2	24.0
		MCS3	24.0
		MCS4	24.0
		MCS5	22.0
		MCS6	22.0
		MCS7	21.0
		MCS8	20.0
2.4 GHz	802.11ax (HE20)	MCS0	26.0
		MCS1	26.0
		MCS2	24.0
		MCS3	24.0
		MCS4	24.0
		MCS5	23.0
		MCS6	22.0
		MCS7	21.0
		MCS8	20.0
		MCS9	20.0
		MCS10	19.0
		MCS11	19.0

5 GHz

Operating Band	Operating Mode	Data Rate	TX Power
5 GHz	802.11a	6 Mb/s	26.0
		9 Mb/s	26.0
		12 Mb/s	24.0
		18 Mb/s	24.0
		24 Mb/s	23.0
		36 Mb/s	23.0
		48 Mb/s	22.0
		54 Mb/s	22.0
5 GHz	802.11n (HT20)	MCS0	26.0
		MCS1	26.0
		MCS2	24.0
		MCS3	24.0
		MCS4	24.0
		MCS5	23.0
		MCS6	22.0
		MCS7	22.0

5 GHz	802.11n (HT40)	MCS0	24.0
		MCS1	24.0
		MCS2	24.0
		MCS3	24.0
		MCS4	24.0
		MCS5	23.0
		MCS6	22.0
		MCS7	22.0
5 GHz	802.11ac (VHT20)	MCS0	26.0
		MCS1	26.0
		MCS2	24.0
		MCS3	24.0
		MCS4	24.0
		MCS5	23.0
		MCS6	22.0
		MCS7	22.0
		MCS8	21.0
5 GHz	802.11ac (VHT40)	MCS0	24.0
		MCS1	24.0

		MCS2	24.0
		MCS3	24.0
		MCS4	24.0
		MCS5	23.0
		MCS6	22.0
		MCS7	22.0
		MCS8	20.5
		MCS9	20.0
5 GHz	802.11ac (VHT80)	MCS0	24.0
		MCS1	24.0
		MCS2	24.0
		MCS3	24.0
		MCS4	24.0
		MCS5	22.0
		MCS6	22.0
		MCS7	20.0
		MCS8	19.0
		MCS9	19.0
5 GHz	802.11ax (HE20)	MCS0	26.0

		MCS1	26.0
		MCS2	24.0
		MCS3	24.0
		MCS4	24.0
		MCS5	23.0
		MCS6	22.0
		MCS7	22.0
		MCS8	21.0
		MCS9	21.0
		MCS10	19.0
		MCS11	19.0
5 GHz	802.11ax (HE40)	MCS0	24.0
		MCS1	24.0
		MCS2	24.0
		MCS3	24.0
		MCS4	24.0
		MCS5	23.0
		MCS6	22.0
		MCS7	21.5

		MCS8	20.5
		MCS9	20.0
		MCS10	18.5
		MCS11	18.5
5 GHz	802.11ax (HE80)	MCS0	24.0
		MCS1	24.0
		MCS2	24.0
		MCS3	24.0
		MCS4	24.0
		MCS5	22.0
		MCS6	22.0
		MCS7	20.0
		MCS8	19.0
		MCS9	19.0
		MCS10	17.0
		MCS11	17.0

Signal Coverage Patterns

5 GHz - Wireless

X-Y plane

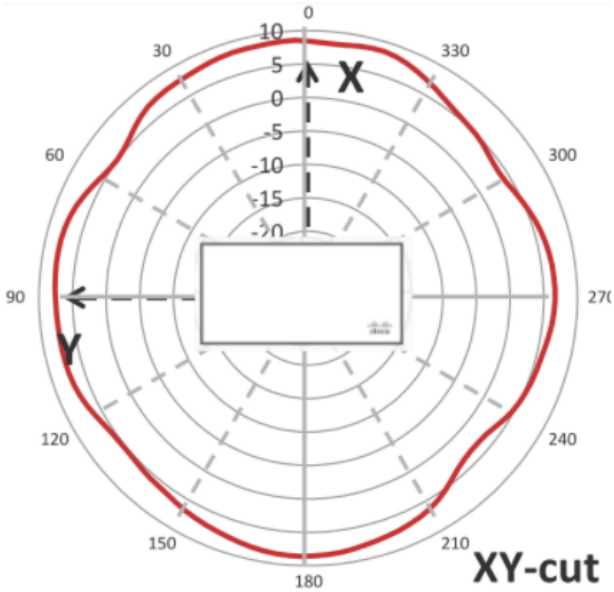

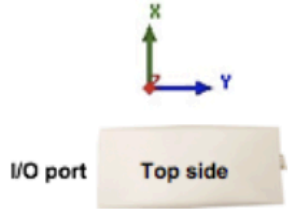

X-Z plane

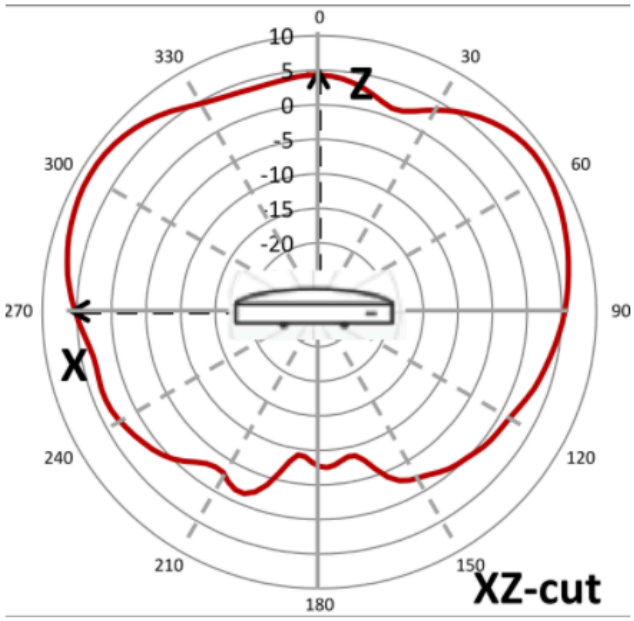

Y-Z plane

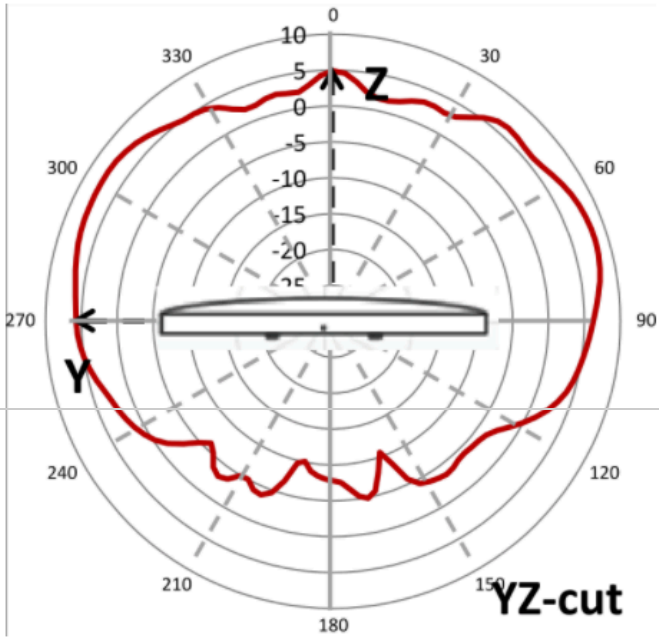

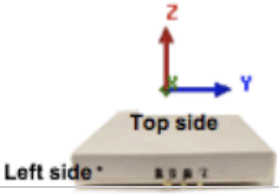

2.4 GHz - Wireless

X-Y plane

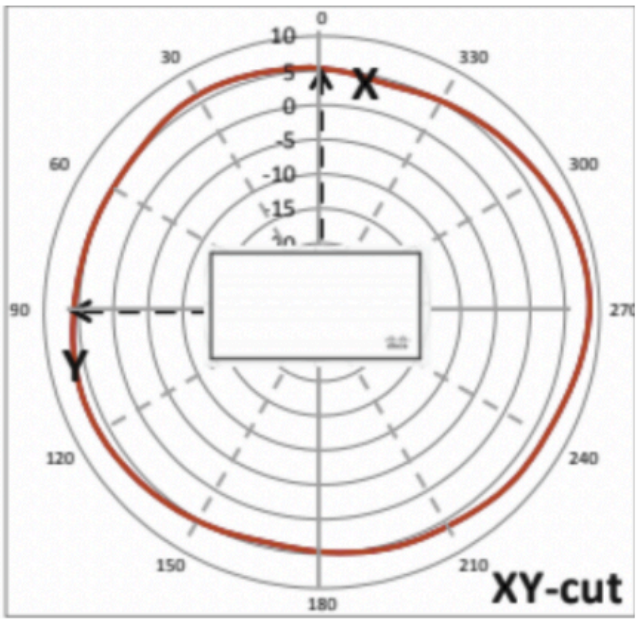

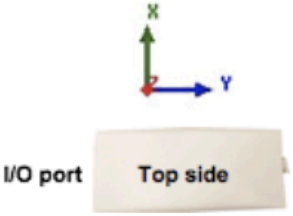

X-Z plane

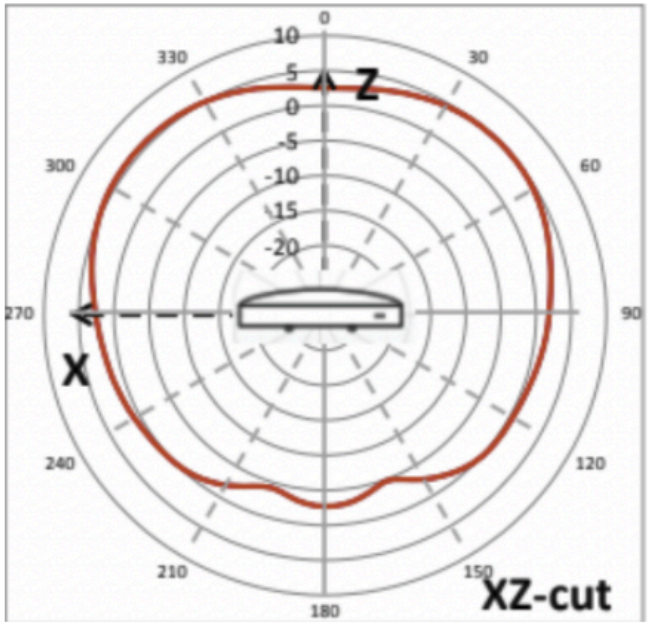

Y-Z plane

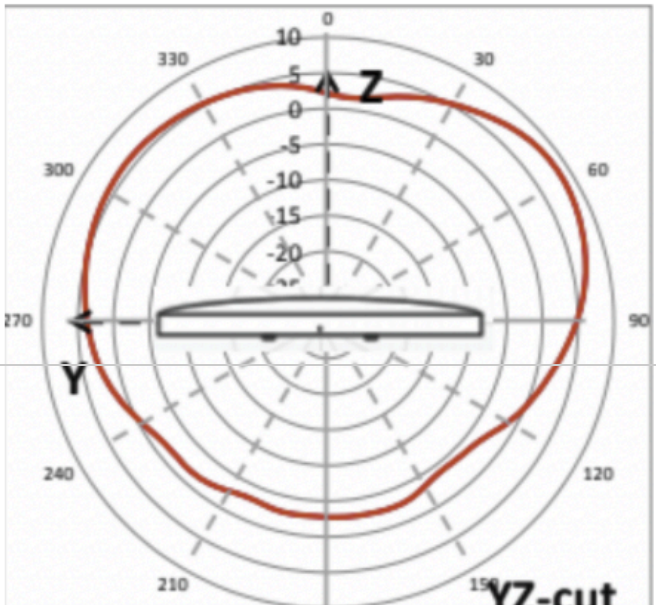

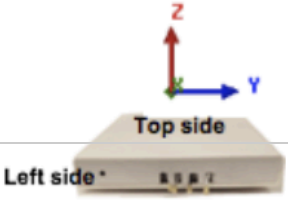

2.4 GHz - Bluetooth®

X-Y plane

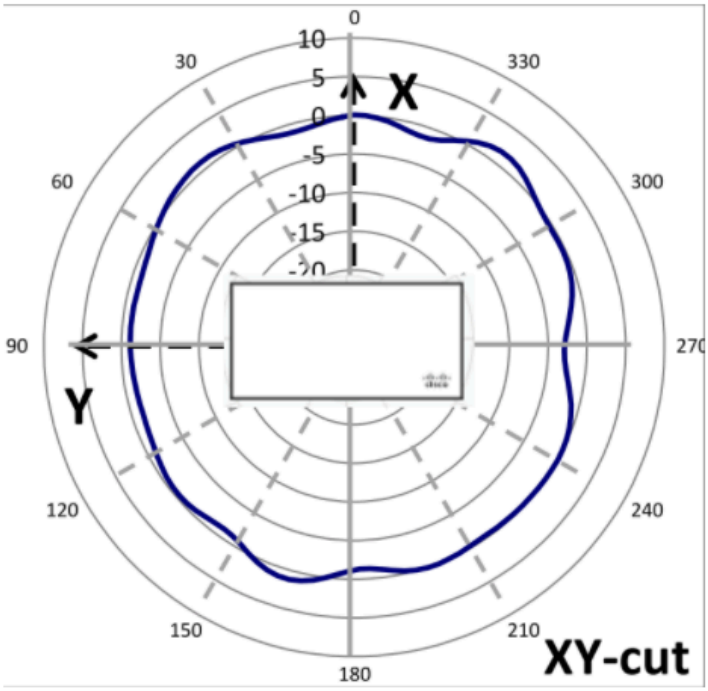

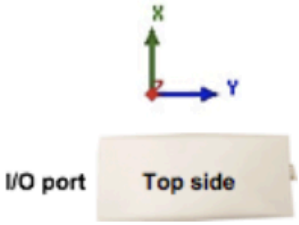

X-Z plane

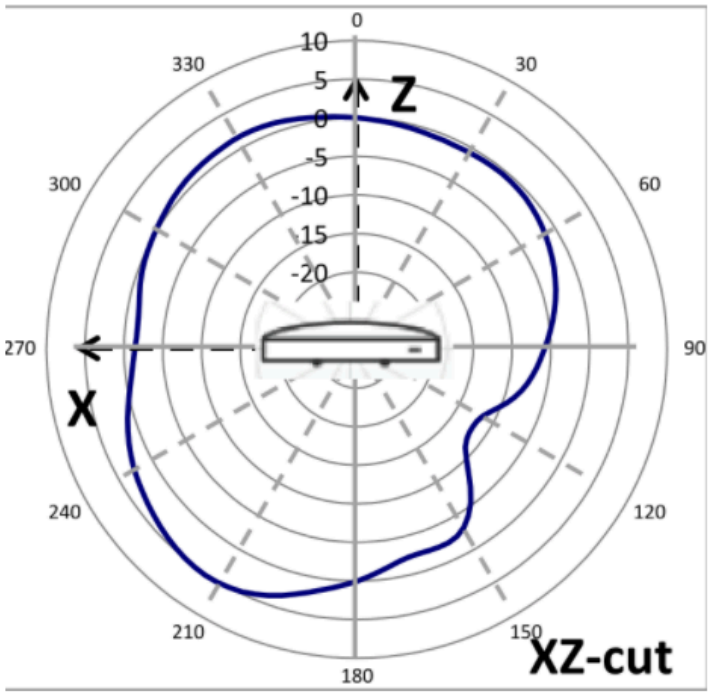

Y-Z plane

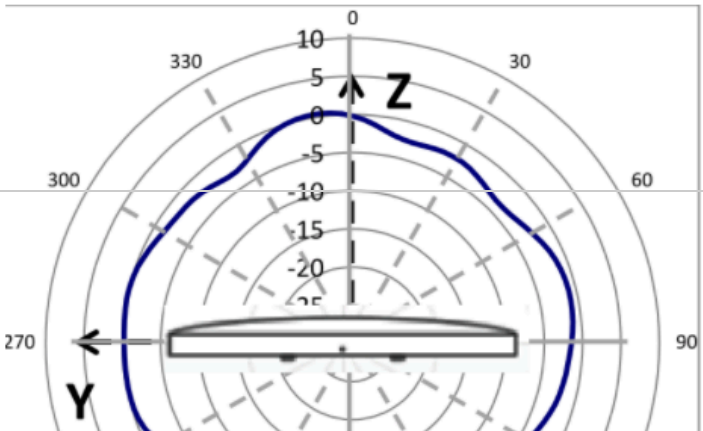

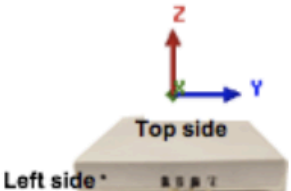

2.4 GHz - Scanning

X-Y plane

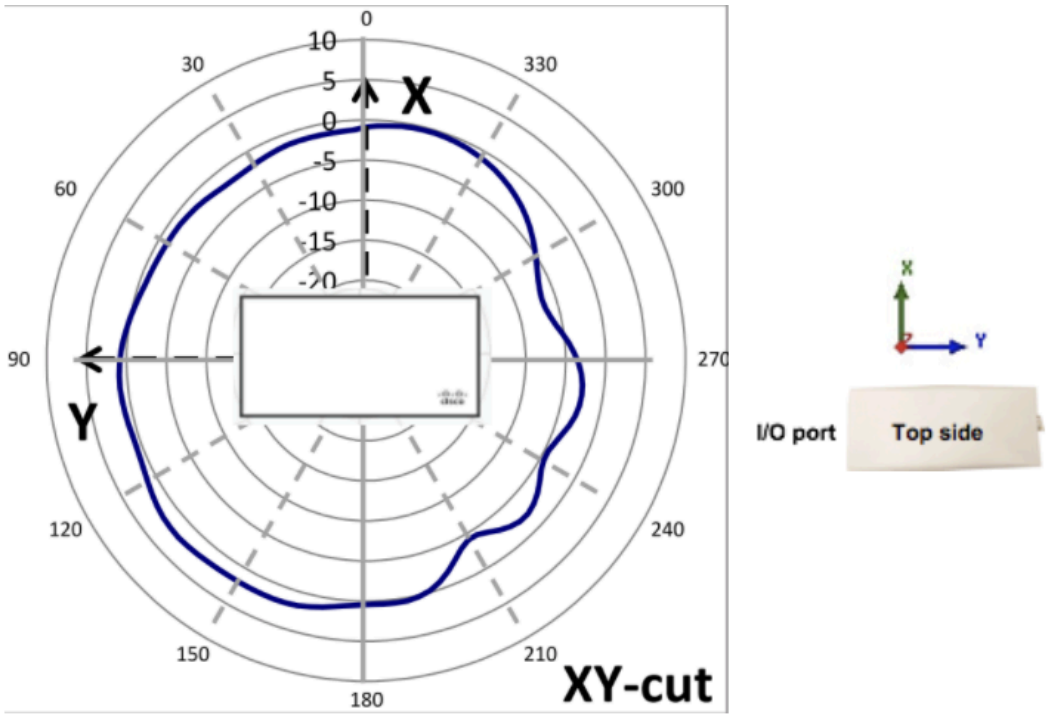

X-Z plane

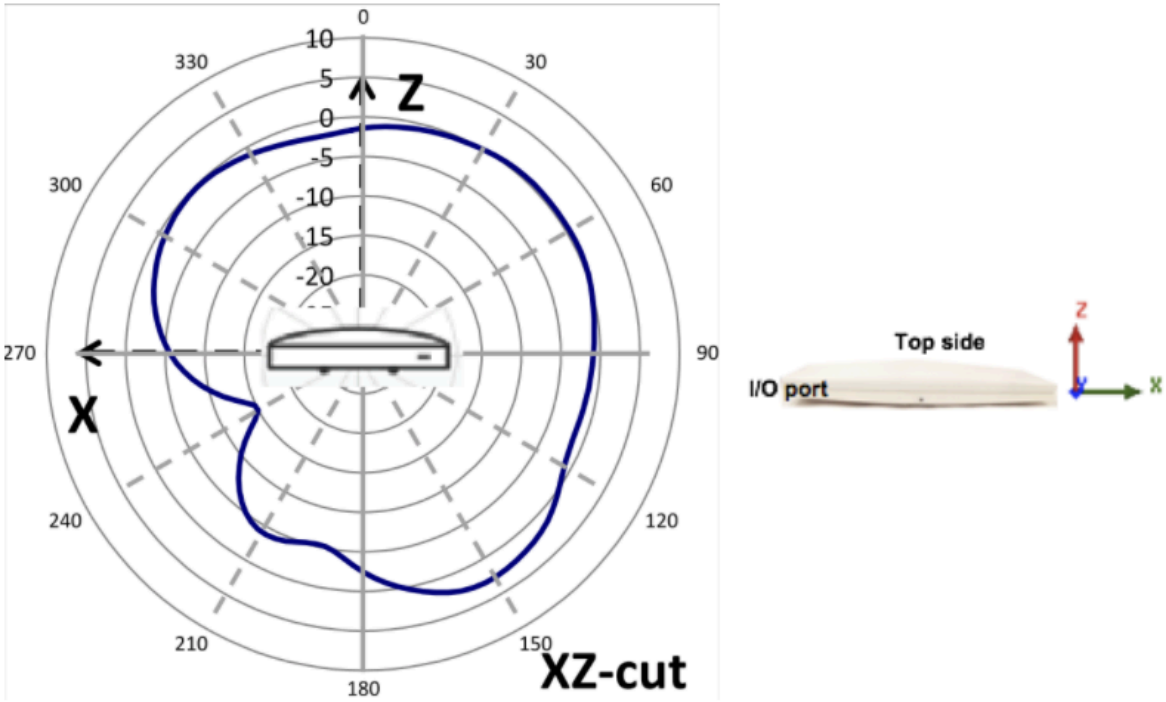

Y-Z plane

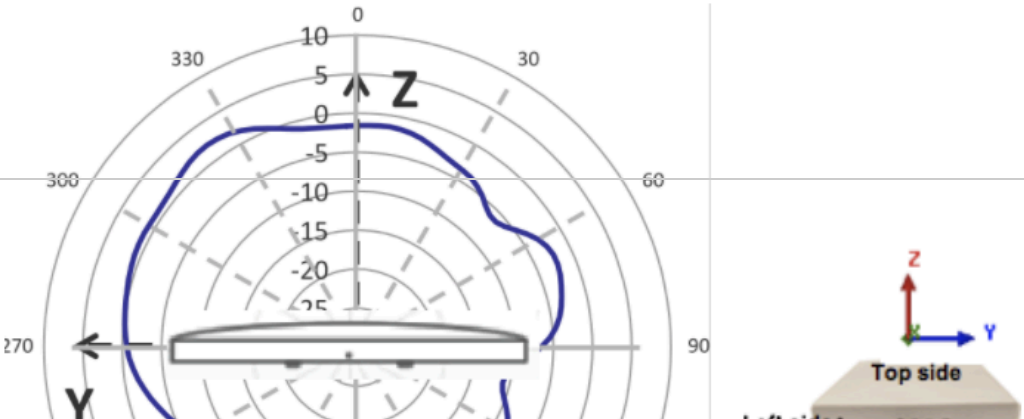

5 GHz - Scanning

X-Y plane

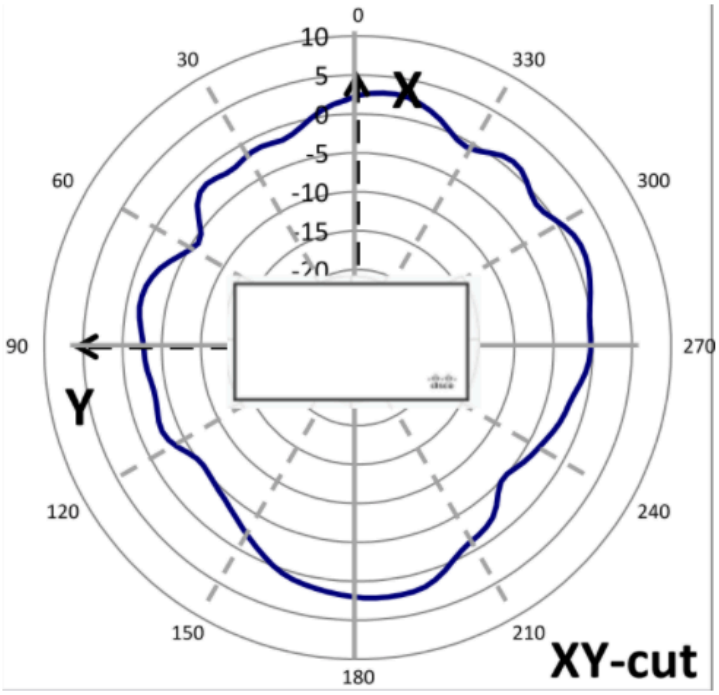

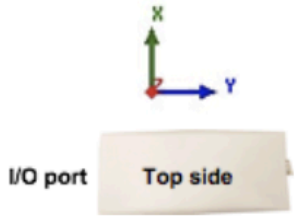

X-Z plane

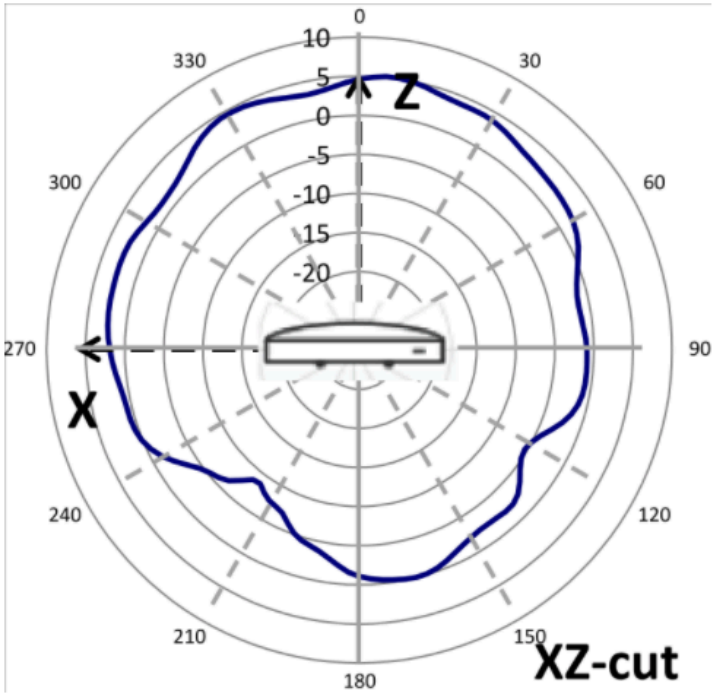

Y-Z plane

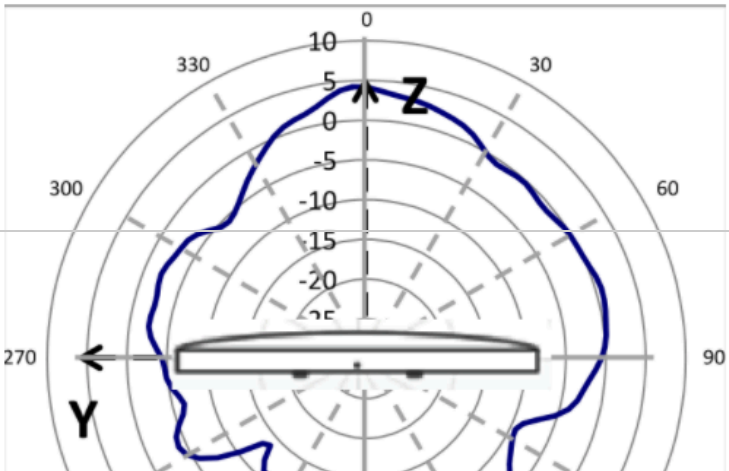

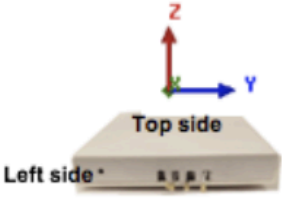

Installation Guide

For instructions on how to install and configure MR46 access points, please refer to the MR46 Installation Guide.