Arboricultural Impact Assessment

in Relation to Proposed 68 Unit Residential Development at

Downley Drive, Manchester, M4 7JU

Prepared by:

Bowland Tree Consultancy Ltd

May 2021

PROJECT DETAILS

Project No.:	BTC2202
Site:	Downley Drive, Manchester, M4 7JU
Client:	Great Places Housing Association
Council:	Manchester City Council
Survey Date:	12 April 2021
Surveyed by:	Wilson Scott FdSc
Prepared by:	Wilson Scott FdSc
Checked by:	Phill Harris MSc BSc(Hons) HND MArborA CEnv MICFor
Date of Issue:	4 May 2021
Version No:	1

Contact Details

Bowland Tree Consultancy Ltd
Unit Two
First Floor
11 Cannon Street
Preston
Lancashire
PR1 3NR

T: 01772 437150
E: info@bowlandtreeconsultancy.co.uk

DISCLAIMER

Survey Limitations: Unless otherwise stated all trees are surveyed from ground level using non-invasive techniques, in sufficient detail to gather data for and inform the design of the current project only. The disclosure of hidden crown and stem defects, in particular where they may be above a reachable height or where trees are ivy clad or located in areas of restrictive ground vegetation, cannot therefore be expected. Detailed tree safety appraisals are only carried out under specific written instructions. Comments upon evident tree safety relate to the condition of said tree at the time of the survey only. Unless otherwise stated all trees should be re-inspected annually in order to appraise their on-going mechanical integrity and physiological condition. It should, however, be recognised that tree condition is subject to change, for example due to the effects of disease, decay, high winds, development works, etc. Changes in land use or site conditions (e.g. development that increases access frequency) and the occurrence of severe weather incidents are also significant considerations with regard to tree structural integrity, and trees should therefore be re-assessed in the context of such changes and/or incidents and inspected at intervals relative to identified and varying site conditions and associated risks.

Where trees are located wholly or partially on neighbouring private third-party land then said land is not accessed and our inspection is therefore restricted to what can reasonably be seen from within the site. Stem diameters and other measurements of trees located on such land are estimated. Any subsequent comments and judgments made in respect of such trees are based on these restrictions and are our preliminary opinion only. Recommendations for works to neighbouring third-party trees are only made where a potential risk to persons and/or property has been identified during our survey or, if applicable, where permissible works are required to implement a proposed development. Where significant structural defects of third-party trees are identified and associated management works are considered essential to negate any risk of harm and/or damage then we will inform the relevant Council of the matter. Where a more detailed assessment is considered necessary then appropriate recommendations are set out in the Tree Survey Schedule.

Where tree stem locations are not included on the plan(s) provided then they are plotted by the arboriculturist at the time of the survey using, where appropriate and/or practicable, a combination of measurement triangulation and GPS co-ordination. Where this is not possible then locations are estimated. Restrictions in these respects are detailed in the report.

This document is intended as a guide to identify key tree related constraints to site development only, and the potential influence of trees upon existing or proposed buildings or other structures resulting from the effects of their roots abstracting water from shrinkable load-bearing soils is not considered herein. The tree survey information in its current form should not therefore be considered sufficient to determine appropriate foundation depths for new buildings. Accordingly, an updated survey, with reference to the current NHBC Standards Chapter 4.2 - Building Near Trees, must therefore be prepared for the specific purpose of informing suitable foundation depths subsequent to planning approval being granted. The advice of a structural engineer must also be sought with regard to appropriate foundation depths for new buildings.

Copyright & Non-Disclosure Notice: The content and layout of this report are subject to copyright owned by Bowland Tree Consultancy Ltd, save to the extent that copyright has been legally assigned to us by another party or is used by Bowland Tree Consultancy Ltd under license. This report may not be copied or used without our prior written agreement for any purpose other than those indicated.

Third Parties: Any disclosure of this document to a third party is subject to this disclaimer. The report was prepared by Bowland Tree Consultancy Ltd at the instruction of and for use by our client. This report does not in any way constitute advice to any third party who is able to access it by any means. Bowland Tree Consultancy Ltd excludes to the fullest extent lawfully permitted all liability whatsoever for any loss or damage arising from reliance on the contents of this report.

CONTENTS **Page**

1.0 INTRODUCTION 1
Terms of Reference 1
Scope and Purpose of Report 1
Site Visit, Data Collection and Tree Plans 1
2.0 STATUTORY PROTECTION IN RESPECT OF TREES AND ASSOCIATED WILDLIFE 2
Tree Preservation Orders and Conservation Area Designations 2
Protected Species 2
Felling Licences 2
3.0 THE SITE AND THE SURROUNDINGS 2
4.0 THE TREE POPULATION 3
5.0 THE DEVELOPMENT PROPOSAL AND ITS PROJECTED ARBORICULTURAL IMPACTS 3
The Development Proposal 4
Projected Arboricultural Losses Relating to the Proposal 4
Compensation for Projected Tree Losses as Part of Site Landscaping 4
6.0 RECOMMENDATIONS FOR SUCCESSFUL TREE RETENTION IN THE CONTEXT OF DEVELOPMENT 5
Root Protection Areas and Construction Exclusion Zones 5
Underground Utilities and Drainage 5
Arboricultural Method Statement and Tree Protection Plan 6
7.0 OTHER RECOMMENDATIONS 6
Non-Development Related Tree Works and Recommendations 6
Tree Work Related Consents 6
Arboricultural Contractors 6
Contractors and Subsequently Identified Tree Defects 6
New Tree Planting 6
Landscaping Within and Close to Retained Trees' RPAs 7
Retained Tree Management 7
8.0 SUMMARY AND CONCLUSIONS 7
REFERENCES 8

APPENDICES

APPENDIX ONE: ..... TREE SURVEY SCHEDULE & BS5837:2012 - TABLE 1
APPENDIX TWO: ..... TEMPORARY PROTECTIVE FENCING SPECIFICATION

PLANS

PLAN ONE: ..... TREE CONSTRAINTS PLAN
PLAN TWO: ..... TREE IMPACT PLAN
PLAN THREE: ..... LANDSCAPE PROPOSAL PLAN

1.0 INTRODUCTION

Terms of Reference

1.1 Bowland Tree Consultancy Ltd were instructed to:

a) Survey, as individuals or by group, all trees having reasonable potential to affect or to be adversely affected by the proposed development of the site under consideration;
b) Prepare a tabulated Tree Survey Schedule based on guidance specified BS5837:2012 - Trees in Relation to Design, Demolition and Construction – Recommendations;
c) Evaluate the potential tree related impacts and design conflicts of the proposals, based on the supplied development proposal plan;
d) Advise on removal, retention and management options for the trees in the current context and in the context of the proposed development;
e) Annotate the proposed site plan to produce a Tree Constraints Plan and a Tree Impact Plan, identifying tree retention categories, crown spreads, Root Protection Areas, trees to be removed, trees to be retained, etc.;
f) Advise on suitable retained tree protection measures required during development; and
g) Produce an Arboricultural Impact Assessment report outlining the main tree related issues and reasonably foreseeable tree impacts in relation to the proposals and indicating suitable mitigation provisions and retained tree protection measures.

Scope and Purpose of Report

1.2 By detailing foreseeable tree related issues this report is intended to assist the Local Planning Authority (LPA), in this case Manchester City Council, in their review of the proposed development and, as such, should be supplied to them in support of the planning application to which it pertains.

1.3 Essentially, the report provides an initial analysis of the impacts that the proposed development is projected to have on trees located both within the site and, where practicable, on land immediately adjacent. It also offers guidance on suitable retained tree management and mitigation for projected losses, along with advice on appropriate tree protection measures in the context of the proposed development in accordance with current guidance.

Site Visit, Data Collection and Tree Plans

1.4 Further to the instruction a tree survey was carried out on 12 April 2021, and all data collected is set out in the attached tabulated Tree Survey Schedule (TSS) at Appendix One which, for ease of interpretation, should be read alongside the appended BS5837:2012 Table 1.

1.5 The survey identified eleven individual trees (prefixed ‘T’) and eight groups of trees (prefixed ‘G’) which have been numbered accordingly on the appended Tree Constraint’s Plan (TCP) and Tree Impact Plan (TIP). The TCP details the existing site with the readily definable tree constraints and the TIP details the existing site with an overlay of the proposed development, along with the readily definable tree constraints and projected impacts. Both the site plan and overlaid proposal plan were provided in electronic format by the client, Great Places Housing Association. In turn, for the purpose of this report, it is presumed that the provided plans’ details are accurate.

1.6 The purpose of the TCP and the TIP are to give an initial indication of the constraints that the trees present to site development and the associated projected impacts of the proposals, and should subsequently be used by the LPA’s tree specialist to preliminarily assess if the proposed development is viable in accordance with BS5837:2012 and, along with the information provided in this report, as a basis for the LPA to request further details regarding specific matters relating to trees at suitable stages in the planning process.

2.0 STATUTORY PROTECTION IN RESPECT OF TREES AND ASSOCIATED WILDLIFE

Tree Preservation Orders and Conservation Area Designations

2.1 The Town & Country Planning Act (1990) (the Act) and associated Regulations empower Local Planning Authorities (LPAs) to protect trees in the interests of amenity by making Tree Preservation Orders (TPOs). The Act also affords protection for trees of over 75 mm diameter that stand within the curtilage of a Conservation Area (CA). Subject to certain exemptions, an application must be made to the LPA in question to carry out works upon or to remove trees that are subject to a TPO, whilst six weeks' notice of intention must be given to carry out works upon or to remove trees within a CA that are not protected by a TPO.

2.2 According to Manchester City Council's website the site does not stand within a CA. However, the council's website does not give details of TPO protection and it is therefore essential to contact Manchester City Council's planning office in order to check for the presence of any statutory tree protection prior to carrying out any tree works that are not directly related to the implementation of a detailed (i.e. full) planning permission.

Protected Species

2.3 Bird nesting season runs from March to August inclusive. Nesting birds are afforded statutory protection under the Wildlife & Countryside Act (1981) (as amended) and their potential presence should therefore be considered when clipping hedges, removing climbing plants and pruning and removing trees. Hedges provide valuable nesting sites for many birds and clipping should therefore be avoided during March to July. Trees, hedges and ivy should be inspected for nests prior to pruning or removal and any work likely to destroy or disturb active nests should be avoided until the young have fledged.

2.4 All bat species and their roosts are protected under Schedule 5 of the Wildlife & Countryside Act (1981) (as amended) and under Schedule 2 of the Conservation of Habitats and Species Regulations 2010 (as amended). In this respect, it should be noted that it is possible that unidentified bat habitat features may be located high in tree crowns and all personnel carrying out tree works at the site should therefore be vigilant and mindful of the possibility that roosting bats may be present in trees with such features. If any bat roosts are identified, then it is essential that works are halted immediately and that a suitably qualified and experienced ecologist investigates and advises on appropriate actions prior to works continuing.

Felling Licences

2.5 Subject to certain exemptions the Forestry Act (1967) requires that a 'Felling Licence' be obtained to remove growing trees amounting to more than five cubic metres of timber in a calendar quarter. Felling Licences are administered by the Forestry Commission and contravention of the associated controls can incur substantial penalties. A felling licence is, however, not required for the felling of trees immediately required for the purpose of carrying out development authorised by a full planning permission granted under the Town and Country Planning Act 1990.

3.0 THE SITE AND THE SURROUNDINGS

3.1 The site under consideration is located in an area of residential character approximately 1.6 kilometres east of Manchester City Centre. The site is bounded by the Rochdale Canal to the north, edges of existing dwellings on Downley Drive and Kingham Drive to the east, Woodward Place to the south and St Vincent Street to the west

3.2 The western portion of the site is currently vacant and secured by fencing, comprising predominantly of overgrown shrubland with a limited amount of hard standing. The eastern portion of the site is comprised of grassland with a limited number of trees. An unadopted path cuts through the site from St Vincent Street to the north to Downley Drive to the South.

3.3 The topographical survey plan provided indicates that the ground levels within the site boundaries vary by up to approximately 2 metres, from the lowest point toward the south-western boundary to the highest point to the north of the site and an east facing banking approximately 1.5 metres in height on the eastern boundary extending down to the neighbouring properties, as detailed on the TCP.

4.0 THE TREE POPULATION

4.1 As noted previously, eleven individual trees and eight groups of trees were surveyed for the purpose of this appraisal. They range from young to mature in age, with heights of up to 14.5 metres, maximum diametrical crown spreads of up to 16.5 metres, and stem diameters of up to 570mm millimetres. Detailed tree dimensions and other pertinent information are included in the Tree Survey Schedule (TSS) at Appendix One.

4.2 In respect of the survey it should be noted that tree quality is categorised within the existing context without taking any site development proposals into account. However, recommendations for works included in the TSS take both current site-usage into consideration and the proposed site development where there is definable development related issues with regard to specific trees.

4.3 Under the UK's planning system trees are a material consideration in the planning and development process. Nonetheless, only trees of a suitable quality and value should be considered a material constraint to development. In this respect the TSS includes a column ('Cat. Grade') listing the trees' respective retention values, where they are rated either 'A', 'B', 'C' or 'U', as per BS5837:2012 Table 1 (Appendix One). 'A' category trees are those considered to be of 'high quality' and, accordingly, the most suitable for retention, whilst 'B' category trees are those considered to be of 'moderate quality', and 'C' category trees are those considered to be of 'low quality' with a correlated low retention value. In turn, 'U' category trees are those that are considered to be 'unsuitable for retention'.

Table A: BS5837-2012 Retention Categories of the Surveyed Trees & Groups

	Ret. Cats.	Tree/Group Numbers	Totals
Those of a moderate or high quality that should be afforded appropriate consideration in the context of development	**'A'**	-	-
	'B'	T11, G5, G6	*1 Tree* *2 Groups*
Those of a low quality that should not be considered a material constraint to development	**'C'**	T1, T2*, T3, T4, T5, T7, T8, T9, T10, G1*, G4, G7, G8	*9 Trees* *4 Groups*
Those that should be removed for sound management reasons regardless of site proposals	**'U'**	T6 G2, G3	*1 Tree* *2 Groups*
			= 11 Trees & 8 Groups in Total

Note: Trees/groups identified with an asterisk are evidently located in the neighbouring public highway and subsequently under the ownership of Manchester City Council

4.4 As detailed in Table A, above, one tree and two groups, equating to five trees in total, were categorised as moderate quality (i.e. 'B' category) and nine trees and four groups, equating to 22 trees in total, were categorised as low quality (i.e. 'C' category), whilst one tree and two groups were categorised as unsuitable for long term retention (i.e. 'U' category) due poor physiological condition and/or displacement of built structures.

5.0 THE DEVELOPMENT PROPOSAL AND ITS PROJECTED ARBORICULTURAL IMPACTS

The Development Proposal

5.1 The information provided to date by the client, Great Places Housing Association, the proposed development is for the construction of a 68-unit residential development, comprising of 23 houses plus 45 apartments within a four-storey building, alongside associated landscaping, boundary treatments, car parking, and cycle parking.

5.2 In this respect it is noted that two vehicular access points are proposed, with the first to connect with Woodward Place to the south-east and the existing hammerhead turning area off Downley Drive and the second to connect the proposed car-parking with St Vincent Street to the site's north-west (see TIP). It is also proposed that the existing hammerhead turning area off Kingham Drive to the site's east is to be utilised in regard to vehicular access provision.

Projected Arboricultural Losses Relating to the Proposal

5.3 As detailed in Table B, below, it is projected that construction of the development as proposed will require the removal of one moderate quality (i.e. 'B' category) group of trees, equating to five trees in total, and nine low quality (i.e. 'C' category) trees, three low quality groups and part of one further low quality groups, equating to 18 trees in total. In addition, as previously stated, one tree and two groups within the site boundaries are considered unsuitable for long term retention (i.e. 'U' category) due to poor physiological condition and/or displacement of boundary and built structures.

Table B: Arboricultural Impacts of Proposed Development & Other Tree Removal Proposals

	Ret. Cats.	Removals necessary to implement development	Removals recommended regardless of development	Total no. of tree removals
Those of a high quality that should be afforded appropriate consideration in the context of development	**'A'**	-	-	-
Those of a moderate quality that should be afforded appropriate consideration in the context of development	**'B'**	G5, G6		*2 Groups*
Those of a low quality that should be afforded appropriate consideration in the context of development	**'C'**	T1, T3, T4, T5 T7, T8, T9, T10, G1 (part)*, G4, G7, G8	-	*8 Trees* *3 Groups* *1 Part Group*
Those that should be removed for sound management reasons regardless of plans	**'U'**	-	T6 G2, G3	*1 Tree* *2 Groups*
Totals		*9 Trees* *5 Groups* *1 Part Group*	*1 Tree* *2 Groups*	***= 9 Trees, 7 Groups & 1 Part Group in Total***

Note: Trees/groups identified with an asterisk are evidently located in the neighbouring public highway and subsequently under the ownership of Manchester City Council, and any works to these trees will therefore require consultation with the identified owner(s)

5.4 With regard to the projected losses, it should be noted that one of the two trees that will require removal from low quality (i.e. 'C' category) group G1 is located within the neighbouring public highway (i.e. Woodward Place) and, from information provided by the client, is subsequently understood, to be under the ownership of Manchester City Council. As such, it will be essential to come to an agreement regarding the removal of this tree with the applicable department(s) at Manchester City Council and, if its removal is approved, to also agree on specific details with regard to compensatory tree planting.

Compensation for Projected Tree Losses as Part of Site Landscaping

5.5 It is understood, from information provided by the planners at Manchester City Council to the project agents, Deloitte, that the LPA expect a replacement ratio of three-for-one for all high,

moderate and low quality trees removed. In turn, this equates to the provision of 69 new trees in total for the projected loss of the four moderate quality trees and the 19 low quality trees.

5.6 Consequently, as indicated on the Landscape Proposal Plan (appended at Plans Three), as prepared by Stephen Martlew Landscape Architecture, a total of 69 new trees, along with various shrubs and several lengths of hedging, are proposed as a component of the development's landscaping scheme. Accordingly, the provision and delivery of the high quality landscape scheme as proposed, is projected to adequately compensate for the identified necessary losses.

6.0 RECOMMENDATIONS FOR SUCCESSFUL TREE RETENTION IN THE CONTEXT OF DEVELOPMENT

Root Protection Areas and Construction Exclusion Zones

6.1 Adequate protection of the Root Protection Areas (RPAs) of retained trees during construction is essential if their long-term viability is to be assured. RPAs, which are calculated through a method provided in BS5837:2012, are ground areas that should be protected by temporary protective fencing as Construction Exclusion Zones (CEZs) throughout the development process, thereby keeping the trees' root zones free from disturbance. Consequently, the RPA distances, as detailed in the TSS (see 6.2) and on the TIP, give an idea of the on-site below-ground constraints in respect of tree roots and assist in planning for appropriate tree retention in relation to feasible development.

6.2 The TSS includes two columns listing RPAs of individually surveyed trees and, where applicable, the largest tree in any surveyed groups as overall areas in square metres and as radial distances. The radial RPAs are indicated as magenta coloured circles on the TIP.

6.3 With regard to CEZs the design, materials and construction of the fencing should be appropriate for the intensity and type of site construction works, should conform to at least section 6.2 of BS5837:2012, and should be secured by the imposition of a suitably worded planning condition. A default Temporary Protective Fencing Specification is included at Appendix Two.

Underground Utilities and Drainage

6.4 The installation of underground utilities in close proximity to trees can cause serious damage to their roots. As such, it is essential that utilities be routed outside RPAs unless there is no other available option. Where RPAs cannot be avoided then guidelines set out in the National Joint Utilities Group publication 'Volume 4: NJUG Guidelines for the Planning, Installation and Maintenance of Utility Apparatus in Proximity to Trees (Issue 2) – Operatives Handbook' should be followed (e.g. trenches of a very limited width to be hand dug or the use of directional drilling).

6.5 To date, no service plan showing proposed service and/or drainage runs, other than the diverted culvert, have been provided in respect of the development under consideration. Nonetheless, the proposed site plan provided indicates that, if correctly planned, there should be sufficient space to run the services and drainage outside the RPAs of the trees proposed for retention. In turn, in order to ensure that this advice is adhered to, the provision of a service plan, with all service runs and drainage routed outside retained tree RPAs, can be conditioned to a planning approval.

Arboricultural Method Statement and Tree Protection Plan

6.6 Government guidance recommends that, where considered expedient by the LPA, an Arboricultural Method Statement (AMS) and a Tree Protection Plan (TPP) be prepared detailing special mitigation construction issues in relation to the development under consideration. Essentially, the AMS and TPP describe and detail the procedures, working methods and protective measures to be used in relation to retained trees in order to ensure that they are adequately protected during the construction process.

6.7 Consequently, in order to ensure that the retained trees are adequately protected throughout the development process, then the production of and adherence to an AMS and a TPP, can be conditioned to a planning approval.

7.0 OTHER RECOMMENDATIONS

Non-Development Related Tree Works and Recommendations

7.1 Any general management pruning works for retained trees that are stated to be non-development related, as detailed in the TSS, are recommended in accordance with prudent arboricultural management and should therefore be carried out regardless of any site development proposals and potential changes in land usage. All tree works should be carried out in accordance with BS3998:2010 - Tree Work – Recommendations.

Tree Work Related Consents

7.2 No tree pruning or removal works should commence on site until necessary consents have been obtained from the LPA as part of a planning approval or in respect of any statutory tree protection (e.g. TPOs).

Arboricultural Contractors

7.3 All tree works should be carried out by suitably qualified and experienced arboricultural contractors carrying appropriate public liability insurance cover and be implemented to the minimum current CE and UK industry standards and in accordance with industry codes of practice. Only certificated personnel should, in accordance with The Control of Pesticides Regulations, apply any pesticides.

Contractors and Subsequently Identified Tree Defects

7.4 Tree contractors should be made aware that, should any significant tree defects become apparent during operations that would not have been immediately obvious to the surveyor, then such defects should be notified immediately to the client and subsequently confirmed to the consultant within five working days.

New Tree Planting

7.5 All tree planting at the site should be carried out in accordance with BS8545:2014 Trees: from nursery to independence in the landscape – Recommendations, and in accordance with the guidance detailed in section 5.6 and Table A.1 of BS5837:2012. In turn, these details should form the basis of the tree planting plan, as discussed at paragraph 5.3, the provision of which and adherence to can be conditioned to a planning approval.

Landscaping Within and Close to Retained Trees' RPAs

7.6 Any landscaping carried out within and close to retained trees' RPAs should be carried out in strict accordance with the guidance detailed in section 8 of BS5837:2012. As is the case with 7.5, above, a requirement for these works to conform with the current guidance detailed in BS5837:2012 can be conditioned to a planning approval.

Retained Tree Management

7.7 Any tree risk management appraisals and subsequent recommendations made in this report were based on observations and site circumstances at the time of the survey. Trees are dynamic living organisms whose structure is constantly changing and even those evidently in good condition can succumb to damage and/or stress.

7.8 In this respect, it should be noted that, under the Occupiers' Liability Act (1957 & 1984), site occupants have a duty of care to take reasonable steps to prevent or minimise the risk of personal injury and/or damage to property from any tree located within the curtilage of the land they occupy. In turn, it is accepted that these steps should normally include commissioning a qualified and experienced arboriculturist to survey their trees in order to identify any risk of harm to persons or damage to property that they may present and, where unacceptable risks are identified, taking suitable remedial action to negate those risks.

8.0 SUMMARY AND CONCLUSIONS

8.1 Eleven individual trees and eight groups of trees were surveyed in respect of a proposed 68-unit residential development with associated landscaping, boundary treatment, car parking, and cycle parking.

8.2 Two groups were categorised as moderate quality, ten trees and four groups were categorised as low quality, and one tree and two groups were categorised as unsuitable for long term retention regardless of the proposals.

8.3 However, it should be noted that one of the trees from a low quality of groups that is projected to require removal is located within the neighbouring council owned highway verge to the site's south, and it will subsequently be essential to negotiate the removal and replacement of this trees with the applicable council department(s).

8.4 In this respect it is understood that that the LPA expect a replacement ratio of three-for-one for all high, moderate and low quality trees removed, thereby equating to the provision of 69 new trees for the projected losses necessary to construct the proposed development.

8.5 As indicated on the Landscape Proposal Plan a total of 69 new trees, plus various shrubs and several lengths of hedging, are proposed as a component of the site's landscaping scheme.

8.6 As such, the provision of the proposed new tree planting as part of the site's landscaping scheme is projected to adequately compensate for necessary tree losses at a three-for-one ratio.

8.7 In turn, the delivery of the high quality landscaping scheme as aforementioned can be conditioned through the imposition of a suitably worded planning condition.

8.8 In addition to the above it is also concluded that, in order to ensure successful existing tree preservation over the long-term, it is essential that the retained trees are protected in strict accordance with current Government guidance and the recommendations included herein.

8.9 Accordingly, in order to ensure adequate protection of retained trees, these factors should be included in a suitably detailed Arboricultural Method Statement and Tree Protection Plan, the provision of which and adherence to can be conditioned to a planning permission.

8.10 Furthermore, it should also be noted that all site works must be carried out in strict accordance with any advice and recommendations made by the project ecologist where applicable and, in turn, in accordance with current government guidance relating to biodiversity, wildlife and development.

8.11 An appraisal of the documentation provided to date identified that the proposed works will require the removal of two moderate quality groups, nine low quality trees and part of one low quality group and the full extent three low quality groups.

REFERENCES

BS8545:2014 - Trees: From Nursery to Independence in the Landscape – Recommendations. BSI British Standards, London.
BS3998:2010 - Tree Work - Recommendations. BSI British Standards, London.
BS5837:2012 - Trees in Relation to Design, Demolition and Construction – Recommendations. BSI British Standards, London.
National House Building Council (2017). NHBC Standards Chapter 4.2 - Building Near Trees. NHBC, Amersham.
National Joint Utilities Group (2007). Volume 4: NJUG Guidelines For The Planning, Installation And Maintenance Of Utility Apparatus In Proximity To Trees (Issue 2) – Operatives Handbook.

TREE SURVEY SCHEDULE FOR ARBORICULTURAL IMPACT ASSESSMENT				
Site:	Downley Drive, Manchester, M4 7JU	**Surveyor:**	Wilson Scott FdSc	**Page:** 1 of 4
Client:	Great Places Housing Association	**Survey Date:**	12 April 2021	
		Job Reference:	BTC2202	

No.	Species	Height	Stem Diam.	Branch Spread		Branch & Canopy Clearances	Life Stage	PC	General Observations and Comments	Management Recommendations	ERC	Cat. Grade	RPA (m²)	RPA Radius (m)
T1	Goat Willow	8	1x280 1x150 (ts)	N E S W	4 4 0 3	2-NW 3	SM	M	▪ Stem located approximately 0.5m from v-mesh security fence. ▪ Twin stemmed from approximately 1m, then splits into multiple stems from a height of approximately 3m. ▪ Several recent pruning wounds up to approximately 150mm diameter to stem from at a height of approximately 2m.	▪ Remove tree in order to construct development as proposed.	20+	C1	46	3.81
T2	White Willow	10	440	N E S W	5 4 6 6	2-S 3	EM	G	▪ Located outside red line boundary. ▪ Moderate stem lean south. ▪ One snap-out wound of approximately 50mm diameter at a height of approximately 3m to south. ▪ Not projected to be impacted by works within proposed site.	▪ Pruning works to raise the canopy to approximately 4.5m height over existing turning head are recommended in order to prevent canopy contact of passing vehicles accessing the proposed site. NB: Tree located outside redline ownership boundary and, as such, client to obtain permission from relevant tree owner(s) prior to pruning works being carried out.	20+	C1	88	5.28
T3	Common Ash	14.5	570	N E S W	8 4 8.5 8	5-NE 5	M	M	▪ Minor stem curvature at 1.6m, corrects to vertical above fully occluded pruning wound. ▪ Eastern canopy reduced due to suppression from edge of group G4.	▪ Remove tree in order to construct development as proposed.	10+	C1	147	6.84
`T4	Common Ash	14	350	N E S W	1 1.5 6 6	4-E 5	EM	M	▪ Minor damage to stem base. ▪ Stem bifurcates at a height of approximately 3.5m ▪ Significant crown bias south/south-west	▪ Remove tree in order to construct development as proposed.	10+	C1	55	4.2
T5	Common Ash	10	300	N E S W	3 4 2 3	2-W 4	EM	G	▪ Crown biased south. ▪ Small amount of deadwood up to 50mm in diameter.	▪ Remove tree in order to construct development as proposed.	10+	C1	41	3.6

Headings and Abbreviations:

No.	Allocated sequential reference number - Tree ('T'), Group ('G'), Woodland ('W') or Hedge ('H') reference number - refer to plan and to numbered tags where applicable
Species:	Common name
Height:	In metres, to half nearest metre – where possible approximately 80% are measured using an electronic clinometer and the remainder estimated against the measured trees. In the case of Groups and Woodlands the measurement listed is that of the highest tree
Stem Diam.:	Stem diameter in millimetres, to nearest 10mm - measured and calculated as per Annex C of BS5837:2012. MS = multi-stemmed, TS = twin-stemmed
Branch Spread:	Crown radius measured (or estimated where considered appropriate) from the four cardinal points (north, east, south and west) to give an accurate visual representation of the crown
Branch & Canopy Clearances:	Existing height above ground level, in metres, of first significant branch and direction of growth (e.g. 2.5-N) and of canopy at lowest point – to inform on crown to height ratio, potential for shading, etc.
Life Stage:	Estimated age class - Y = young, SM = semi-mature, EM = early-mature, M = mature, PM = post-mature
PC:	Physiological Condition - a measure of the tree'(s)' overall vitality, i.e. D = Dead, MD = Moribund, P = Poor, M = Moderate, G = Good
General Observations and Comments:	Comments relating to the tree'(s)' overall condition and any other pertinent factors including structural defects, current and potential direct structural damage, physiological decline, poor form, etc.
Management Recommendations:	Either Preliminary or In Consideration of the Proposal - In the case of Arboricultural Constraints Surveys the recommended management works only take exiting site and tree circumstances and conditions into account and not proposed developments. Arboricultural Impact Assessment and Method Statement related Surveys take the proposed development into consideration with recommendations made accordingly. More than one option may be given if considered appropriate
ERC:	Estimated Remaining Contribution - in years as per BS5837:2012 (i.e. <10, 10+, 20+, 40+)
Cat. Grade:	Category Grading - tree retention value listed as U, A, B or C - in accordance with BS5837:2012 Table 1
RPA m²:	Root Protection Area in m² - calculated area around the tree that must be appropriately protected throughout the development process in order avoid root damage
RPA Radius (m):	Root Protection Area Radius - in metres measured from the centre of the stem to the line of tree protection
# (Estimated Dimensions):	Where trees are located off-site, or are inaccessible for any other reason, and accurate measurements or other information cannot be taken then the information provided is estimated and is duly suffixed with a "#" symbol

Bowland Tree Consultancy Ltd

TREE SURVEY SCHEDULE FOR ARBORICULTURAL IMPACT ASSESSMENT				
Site:	Downley Drive, Manchester, M4 7JU	**Surveyor:**	Wilson Scott FdSc	**Page:** 2 of 4
Client:	Great Places Housing Association	**Survey Date:**	12 April 2021	
		Job Reference:	BTC2202	

No.	Species	Height	Stem Diam.	Branch Spread		Branch & Canopy Clearances	Life Stage	PC	General Observations and Comments	Management Recommendations	ERC	Cat. Grade	RPA (m²)	RPA Radius (m)
T6	Common Ash	11	360	N E S W	5 3 6 1	4-N 4	EM	M/P	▪ Partially occluded shear fracture wound of approximately 2m long by up to 50mm wide on north side of stem. ▪ Canopy displaying signs of a reduction in vitality consistent with colonisation by Ash Dieback Disease. ▪ Moderate amount of deadwood up to 50mm diameter.	▪ Remove tree due to significantly limited future potential for growth.	<10	U	59	4.32
T7	Common Ash	9	320	N E S W	5 3 4 1	4-N 4	SM	M/P	▪ Fire damage to north-eastern side of stem base. ▪ Slight stem lean west.	▪ Remove tree in order to construct development as proposed.	10+	C1	46	3.84
T8	Crab Apple	9	1x180 1x170 2x150 1x140 (ms)	N E S W	3 3 3 3	2-N 1.5	SM	M	▪ Multi-stemmed from ground level. ▪ Tight fork unions with included bark tissues. ▪ Multiple occluded pruning wounds up to 75mm in diameter	▪ Remove tree in order to construct development as proposed.	20+	C1	46	3.84
T9	Common Ash	7	1x160 1x120 (ts)	N E S W	5 3 4 1	4-N 4	SM	M/G	▪ Evidence of tarmac uplift on north to north-east side of lower stem. ▪ Snapped stem at a height of approximately 1m, up to approximately 100mm diameter on south side of stem. ▪ Upper canopy in contact with lamppost.	▪ Remove tree in order to construct development as proposed.	10+	C1	18	2.4
T10	Cockspur Thorn	2.5	110	N E S W	0.5 2 2 2	N/A 1	Y	M/G	▪ Rooted at base of adjacent tree T9. ▪ Northern canopy reduced due to suppression from T9.	▪ Remove tree in order to construct development as proposed.	10+	C1	5	1.32
T11	Silver Birch	12	390	N E S W	4 4 4 4	4-S 2	EM	G	▪ Stem approximately 0.5m from wooden panel boundary fence and brick wall. ▪ Slight stem lean east. ▪ Proposed parking area projected to partly encroach by approximately 4% into RPA, however, this is not projected to impact upon long term overall physiological and/or structural condition providing the remaining RPA is afforded adequate protection.	▪ Retain tree in context of proposal. ▪ Ensure protection of Root Protection Area (RPA), as far as practicable in context of proposed development, through establishment of Construction Exclusion Zone (CEZ) in accordance with appended specification.	20+	B1	57	4.36

No.	Species	Height	Stem Diam.	Branch Spread		Branch & Canopy Clearances	Life Stage	PC	General Observations and Comments	Management Recommendations	ERC	Cat. Grade	RPA (m²)	RPA Radius (m)
G1	4no. Wild Cherry	≤ 8	≤ 310	N E S W	≤ 4 ≤ 4 ≤ 4.5 ≤ 4	3-E 3	EM	M	▪ Loosely spaced linear group. ▪ Two trees to east stand outside red line boundary in neighbouring area of land that is understood to be under Manchester City Council ownership. ▪ Planting pits slightly uplifted on all trees. ▪ All stems displaying gum exuding lesions. ▪ Recent branch failure at a height of approximately 3m to western most tree. ▪ Moderate amount of deadwood up to 100mm diameter.	▪ Remove two central trees from group in order to construct development as proposed (see TIP). NB: Client to obtain permission from relevant tree owner(s) in order to remove impacted tree that is located within neighbouring council owned land (see TIP). ▪ Retain two trees in group in context of proposed development (see TIP). ▪ Prune canopies of retained remaining tree within site to attain clearance of approximately 4.5m over proposed road and 3m over proposed footway. ▪ Protect RPA of retained tree within site through establishment of CEZ in accordance with appended specification.	20+	C1	≤ 43	≤ 3.72
G2	1no. Goat Willow, 1no. Hybrid Black Poplar	≤ 5	≤ 1x210 1x200 1x170 1x120 1x80 (ms)#	N E S W	≤ 2 ≤ 1 ≤ 1.5 ≤ 3	N/A ≥ 0	Y	M	▪ Loosely spaced self-seeded group. ▪ Stems and branches growing through and in contact with v-mesh security fence. ▪ Unsuitable for retention due to conflict with boundary fence.	▪ Remove group due to significantly limited future potential for growth.	<10	U	≤ 43	≤ 3.68
G3	2no. Buddleia	≤ 4.5	≤ 80	N E S W	≤ 1 ≤ 1 ≤ 0 ≤ 1	N/A ≥ 3	Y	G	▪ Tightly spaced self-seeded group. ▪ Stems and branches growing through and in contact with v-mesh security fence. ▪ Unsuitable for retention due to conflict with boundary fence.	▪ Remove group due to significantly limited future potential for growth.	<10	U	≤ 3	≤ 0.96
G4	2no. Silver Birch, 1no. Common Elder	≤ 12	≤ 380	N E S W	≤ 4 ≤ 5 ≤ 6 ≤ 6	5-NE ≥ 3	EM	M/G	▪ Moderately spaced group. ▪ Lawnmower damage to stem bases.	▪ Remove group in order to construct development as proposed.	20+	C1	≤ 65	≤ 5.46
G5	2no. Common Hornbeam	≤ 11	≤ 1x410 1x390 (ts)	N E S W	≤ 4 ≤ 5.5 ≤ 6.5 ≤ 6	2-S ≥ 1	SM	G	▪ Moderately spaced group. ▪ Historical fully occluded pruning wounds to approximately 150mm diameter on most northern tree.	▪ Remove group in order to construct development as proposed.	20+	B1	≤ 65	≤ 4.56

TREE SURVEY SCHEDULE FOR ARBORICULTURAL IMPACT ASSESSMENT				
Site:	Downley Drive, Manchester, M4 7JU	**Surveyor:**	Wilson Scott FdSc	**Page:** 4 of 4
Client:	Great Places Housing Association	**Survey Date:**	12 April 2021	
		Job Reference:	BTC2202	

No.	Species	Height	Stem Diam.	Branch Spread		Branch & Canopy Clearances	Life Stage	PC	General Observations and Comments	Management Recommendations	ERC	Cat. Grade	RPA (m²)	RPA Radius (m)
G6	2no. Fastigiate Hornbeam	≤ 10	≤ 330	N E S W	≤ 4 ≤ 4 ≤ 4 ≤ 4	2-N N/A	SM	G	▪ Closely spaced pair. ▪ Several tight fork unions with included bark tissue. ▪ Tree to the south Approximately 150mm diameter branch failure at a height of approximately 2m, with subsequent reaction growth present.	▪ Remove group in order to construct development as proposed.	40+	B2	≤ 57	≤ 4.26
G7	2no. Lawson Cypress	≤ 12	≤ 1x370 1x340 1x160 (ms)	N E S W	≤ 3.5 ≤ 3.5 ≤ 3.5 ≤ 3.5	1.5-E ≥ 2	EM	G	▪ Closely spaced pair. ▪ Tight stem unions with included bark tissues on both trees. ▪ Partially occluded branch damage at a height of approximately 1m on north side of both trees up to approximately 100mm diameter.	▪ Remove group in order to construct development as proposed.	10+	C2	≤ 64	≤ 4.51
G8	4no. Common Ash	≤ 7	≤ 120	N E S W	≤ 2 ≤ 2 ≤ 2 ≤ 2	N/A ≥ 3	Y	M	▪ Closely spaced linear group adjacent to footpath.	▪ Remove group in order to construct development as proposed.	10+	C1/2	≤ 7	≤ 1.44

BS5837:2012 Table 1 – Cascade Chart for Tree Quality Assessment

Category and definition	Criteria (including subcategories where appropriate)			Identification on plan
Trees unsuitable for retention (see Note)				
Category U Those in such a condition that they cannot realistically be retained as living trees in the context of the current land use for longer than 10 years	▪ Trees that have a serious, irremediable, structural defect, such that their early loss is expected due to collapse, including those that will become unviable after removal of other category U trees (e.g. where, for whatever reason, the loss of companion shelter cannot be mitigated by pruning) ▪ Trees that are dead or are showing signs of significant, immediate, and irreversible overall decline ▪ Trees infected with pathogens of significance to the health and/or safety of other trees nearby, or very low quality trees suppressing adjacent trees of better quality *Note: Category U trees can have existing or potential conservation value which it might be desirable to preserve; see BS5837:2012 paragraph 4.5.7.*			Red
	1. Mainly arboricultural qualities	**2. Mainly landscape qualities**	**3. Mainly cultural values, including conservation**	
Trees to be considered for retention				
Category A **Trees of high quality** with an estimated remaining life expectancy of at least 40 years	Trees that are particularly good examples of their species, especially if rare or unusual; or those that are essential components of groups or formal or semi-formal arboricultural features (e.g. the dominant and/or principal trees within an avenue)	Trees, groups or woodlands of particular visual importance as arboricultural and/or landscape features	Trees, groups or woodlands of significant conservation, historical, commemorative or other value (e.g. veteran trees or wood-pasture)	Green
Category B Those of moderate quality and value: those in such a condition as to make a significant contribution. A minimum of 20 years is suggested.	Trees that might be included in the high category, but are downgraded because of impaired condition. Examples include the presence of remediable defects including unsympathetic past management and minor storm damage	Trees present in numbers, usually as groups or woodlands, so they form distinct landscape features which attract a higher collective rating than they might as individuals. But which are not, individually, essential components of formal or semi-formal arboricultural features. For example, trees of moderate quality within an avenue that includes better, A category specimens. Or trees which are internal to the site, therefore individually having little visual impact on the wider locality	Trees with clearly identifiable conservation or other cultural benefits	Blue
Category C Those trees of low quality and value: currently in adequate condition to remain until new planting could be established - a minimum of 10 years is suggested - or young trees with a stem diameter below 150 mm	Trees not qualifying in higher categories	Trees present in groups or woodlands, but without this conferring on them significantly greater landscape value, and/or trees offering low or only temporary screening benefit	Trees with very limited conservation or other cultural benefits	Grey
	Note – Whilst C category trees will usually not be retained where they would impose a significant constraint on development, young trees with a stem diameter of less than 150mm should be considered for relocation			

- TEMPORARY PROTECTIVE FENCING SPECIFICATION -

Construction Exclusion Zones (CEZs), enclosed by **Temporary Protective Fencing**, as detailed below and to be agreed with the Local Planning Authority (LPA), shall:

1. be retained in place throughout the development process, as specified in the 'Temporary Protective Fencing Construction' section below and detailed in BS5837:2012 Figure 2 (overleaf);
2. be sited in the area(s) defined by the Root Protection Areas or, if applicable, the Construction Exclusion Zones, as detailed on the associated Tree Plan;
3. be erected prior to any construction, demolition or excavation works and remain in place for the duration of the project;
4. preclude any delivery of site accommodation and/or materials and/or plant machinery;
5. preclude all construction related activity, with the sole exception of specified arboricultural works and any other works to be carried out under supervision that have been agreed by all parties; and
6. preclude the storage of all development related materials and substances including fuels, oils, additives, cement and/or any other deleterious substance.

Any incursion into CEZs must be by prior arrangement, following consultation with the LPA.

Temporary Protective Fencing Construction

1. Temporary protective fencing panels shall be weldmesh "Heras" panels of at least 2.0 metres in height.
2. The panels shall butt together and be securely fixed to a scaffold framework, as per 3 to 5 below.
3. The scaffold framework shall comprise of upright poles of at least 3.0 metres in length driven no less than 0.6 metres into the ground at maximum 3.0 metre centres with horizontal and diagonal poles fixed to the uprights, as per 4 to 5 below.
4. The two horizontal rail poles shall be attached to the uprights at heights of 0.6 and 1.8 metres with 3 no. clamps to each joint.
5. The diagonal scaffold pole struts be clamped to the top rail of the scaffold framework at a 45º angle and extend back into the CEZ and clamped to a 0.7 metre length of scaffold tube that shall be driven no less than 0.5m into the ground.
6. No fixing shall be made to any tree and all possible precautions shall be taken to prevent damage to tree roots when locating posts.
7. A 600mm x 300mm warning sign reading "TREE PROTECTION AREA KEEP OUT" (see Figure 1, below) shall be fixed to every 10.0 metre length of protective fencing.
8. On completion and prior to any demolition or construction works, site preparation, excavation or delivery of plant and materials, the LPA shall inspect and approve the Temporary Protective Fencing.

Figure 1: CEZ Warning Sign

– TREE PROTECTION AREA –
KEEP OUT!

(TOWN & COUNTRY PLANNING ACT 1990)
THE TREES ENCLOSED BY THIS FENCE ARE PROTECTED BY PLANNING CONDITIONS AND/OR SUBJECTS OF A 'TREE PRESERVATION ORDER', THE CONTRAVENTION OF WHICH MAY LEAD TO CRIMINAL PROSECUTION

THE FOLLOWING MUST BE OBSERVED BY ALL PERSONNEL:

- **THE PROTECTIVE FENCING MUST NOT BE MOVED**
- **NO PERSON SHALL ENTER THE CONSTRUCTION EXCLUSION ZONE**
- **NO MACHINE, PLANT OR VEHICLES SHALL ENTER THE EXCLUSION ZONE**
- **NO MATERIALS SHALL BE STORED IN THE EXCLUSION ZONE**
- **NO SPOIL SHALL BE DEPOSITED IN THE EXCLUSION ZONE**
- **NO EXCAVATION SHALL OCCUR IN THE EXCLUSION ZONE**
- **NO FIRES SHALL BE LIT IN THE EXCLUSION ZONE**

ANY INCURSION INTO THE EXCLUSION ZONE MUST BE WITH THE WRITTEN PERMISSION OF THE LOCAL PLANNING AUTHORITY

Figure 2: BS5837:2012 Default specification for protective barrier

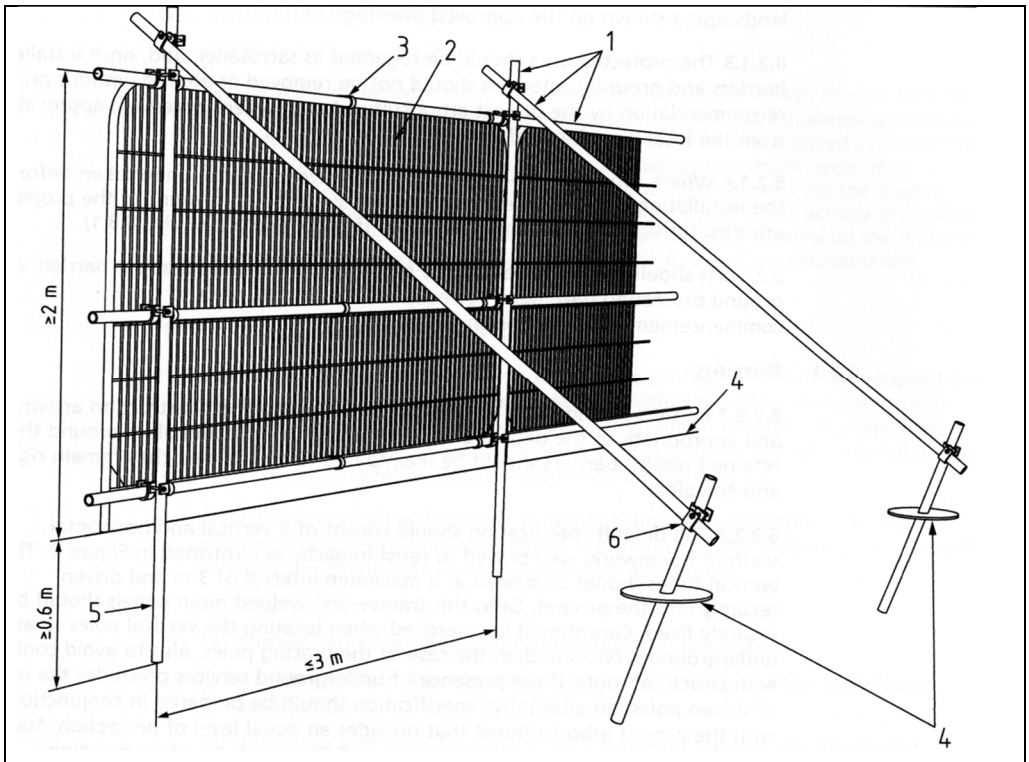

Key

1. Standard scaffold poles.
2. Heavy gauge 2 metre tall galvanised tube and welded mesh infill panels
3. Panels secured to uprights and cross members with wires ties
4. Ground level
5. Uprights driven into the ground until secure (minimum depth 0.6 metres)
6. Standard scaffold clamps

Temporary Ground Protection

1. Any necessary Temporary Ground Protection areas shall conform to Figure 3, below, unless otherwise agreed with the LPA.
2. The Ground Protection Area shall be left undisturbed and covered by a semi-permeable geotextile membrane which shall, in turn, be covered by a compressible layer consisting of a material such as woodchip.
3. Side-butting scaffold boards shall then be fitted to cover the Ground Protection Area.
4. On completion of installation, and prior to any demolition or construction works, site preparation, excavation or delivery of plant and materials, the Consulting Arboriculturist or the LPA Tree Officer, as agreed, shall inspect the Temporary Ground Protection.
5. The Temporary Ground Protection shall remain in place until completion of the project and only removed following receipt of written permission from the LPA.

Figure 3: Temporary Ground Protection – Recommended Construction

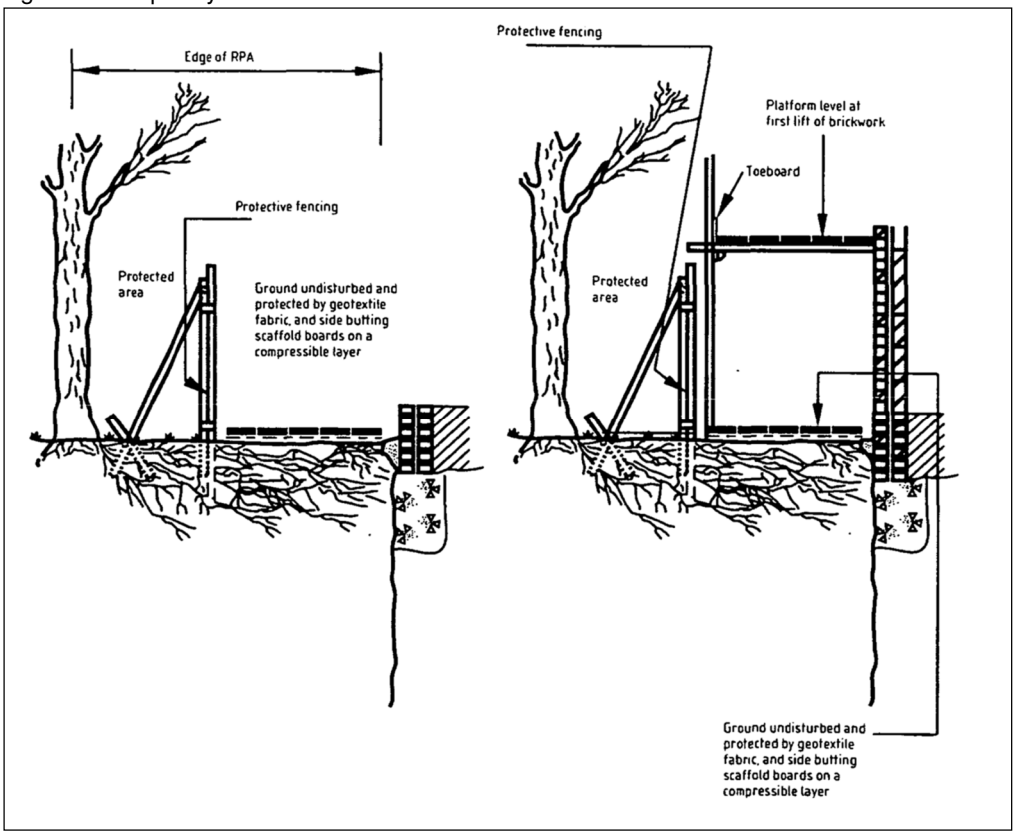

Important: The original version of this plan was produced in colour, which is essential to the plan's interpretation and usability. As such, a monochrome copy should not be relied upon

KEY

T = Individual Tree
G = Group of Trees

Please refer to associated Tree Survey Schedule and appendices for specific details in respect of items below:

Tree Categorisations:

Those to be Considered for Retention:

Category 'A' Tree/Group
Those of a High Quality with an Estimated Remaining Life Expectancy of at Least 40 Years

Category 'B' Tree/Group
Those of a Moderate Quality with an Estimated Remaining Life Expectancy of at Least 20 Years

Category 'C' Tree/Group
Those of Low Quality with an Estimated Remaining Life Expectancy of at Least 10 Years, or Young Trees

Those Considered Unsuitable for Retention:

Category 'U' Tree/Group
Those in Such a Condition that they Cannot Realistically be Retained as Living Trees in the Context of the Current Land Use for Longer Than 10 Years

Note: The stem location of and the full extents of groups G1 to G3 were not plotted on the topographical survey based site plan provided, and their locations were subsequently plotted by the arboricultural surveyor using GPS siting and estimation at the time of the survey. As such, the plotted location of these trees cannot therefore be considered to be wholly accurate

Root Protection Areas (RPAs):

RPAs
Area(s) of Ground Around Trees that Should be Protected Throughout Development Works with Protective Fencing to form a Construction Exclusion Zone - see Temporary Protective Fencing Specification

Project:
DOWNLEY DRIVE
MANCHESTER
M4 7JU

Client:
GREAT PLACES HOUSING ASSOCIATION

Title:
TREE CONSTRAINTS PLAN
in Relation to Proposed Residential Development

Scale:	1:500@A3
Date:	April 2021
Drawn by:	WS
Checked by:	PH

Bowland Tree Consultancy Ltd
e: info@bowlandtreeconsultancy.co.uk
t: 01772 437150

Ref: BTC2202-TCP Rev:

Important: The original version of this plan was produced in colour, which is essential to the plan's interpretation and usability. As such, a monochrome copy should not be relied upon

KEY

T = Individual Tree
G = Group of Trees

Please refer to associated Tree Survey Schedule and appendices for specific details in respect of items below:

Tree Categorisations:

Those to be Considered for Retention:

Category 'A' Tree/Group *Those of a High Quality with an Estimated Remaining Life Expectancy of at Least 40 Years*

Category 'B' Tree/Group *Those of a Moderate Quality with an Estimated Remaining Life Expectancy of at Least 20 Years*

Category 'C' Tree/Group *Those of Low Quality with an Estimated Remaining Life Expectancy of at Least 10 Years, or Young Trees*

Those Considered Unsuitable for Retention:

Category 'U' Tree/Group *Those in Such a Condition that they Cannot Realistically be Retained as Living Trees in the Context of the Current Land Use for Longer Than 10 Years*

Note: The stem locations of and the full extents of groups G1 to G3 were not plotted on the topographical survey based site plan provided, and their locations were subsequently plotted by the arboricultural surveyor using GPS siting and estimation at the time of the survey. As such, the plotted location of these trees cannot therefore be considered to be wholly accurate
Note 2: Trees with their identifying numbers labelled in grey are proposed for removal in the context of the proposed development

Root Protection Areas (RPAs):

RPAs
Area(s) of Ground Around Trees that Should be Protected Throughout Development Works with Protective Fencing to form a Construction Exclusion Zone - see Temporary Protective Fencing Specification

Project:
DOWNLEY DRIVE
MANCHESTER
M4 7JU

Client:
GREAT PLACES HOUSING ASSOCIATION

Title:
TREE IMPACT PLAN
in Relation to Proposed 68 Unit Residential Development

Scale:	1:500@A2
Date:	May 2021
Drawn by:	WS
Checked by:	JL

Bowland Tree Consultancy Ltd
e: info@bowlandtreeconsultancy.co.uk
t: 01772 437150

Ref: BTC2202-TIP Rev:

HOUSING AREA PLANTING

Proposed trees
FRONT GARDENS 10-12cm girth standards.
Winter flowering Cherry (Prunus subhirtella Autumnalis Rosea) 8no
Amelanchiar lamarkii
10-12 cm girth standards. 6no

REAR GARDENS
FRUIT TREES Malus /Pyrus (Apple /Pear) /Damson
Prunus institia Shropshire prune
Bare rooted single staked feathered trees 2-2.5m. 16 no

Acer campestre (Field Maple) 4no
Flowering Cherry (Prunus avium Plena) to the side of Woodward Place 12-14cm standards single staked and tied. 4no.

Ilex aquifolium 1.5m -1.75m container grown.4no

Low medium groundcover and aromatic herbaceous planting to front gardens.Defensive shrub planting to rear of Woodward Place (Pyracantha / Prunus lusitanica)

Turf or amenity seed mix to verges with bulb planting. fine lawn hard wearing grass seed mix to garden areas.

Macadam to highway areas and making good of canal towpath

EXISTING TREES ON SITE-tree numbers as per TEP tree survey.

Retained trees - 5

Removed trees23

Proposed trees 69

PLANTING -APARTMENTS
Aromatic herbs and herbaceous planting next to seating area.

Moisture tolerant planting (shrubs and grasses) to rain garden areas alongside parking.

Defensive planting to canalside frontage as per apartment block detail.

Turf or amenity seed mix to lawn with bulb planting.

Meadow seed mix to edge of shrub planting,

Proposed tree planting

Alder Alnus glutinosa "Laciniata" bare root 14-16cm girth standards single staked.13no

Hairy Birch Betula pubescens multi stemmed rootballed underground guyed 3-4m. height 3 stems minimum of equal diameter.14no

PLANNING SUBMISSION

REVISIONS
A-Lighting /pedestrian crossings on turning heads added. 19/ 03 /2021
B-Exisitng tree numbers revised. 20/04/2021

Stephen Martlew Landscape Architecture
Unit 2 8a Loom Street Manchester M4 6AN
TELEPHONE 0161 907 3226

DRAWING TITLE	Landscape General Arrangement		
DRAWING No	1907/p/01		
PROJECT	DOWNLEY DRIVE		
CLIENT	Great Places /Buttress		
SCALE	**1:250 @ A 1**	REVISION	B
DATE	March 2021	REVISED	
DRAWN	PG	CHECKED	SM