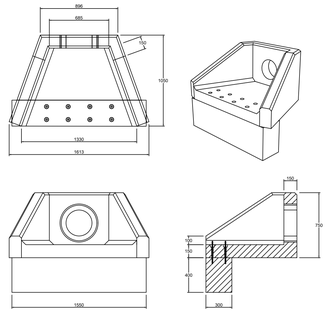



## CROSS SECTION THROUGH SUDS PONDS




## TYPICAL HEADWALL DETAIL

STANDARD NOTES

1. THIS DRAWING IS TO BE READ IN CONJUNCTION WITH ALL RELEVANT ARCHITECT'S AND ENGINEER'S DRAWINGS AND THE SPECIFICATIONS.
2. THIS DRAWING SHOULD NOT BE SCALED.
3. ALL DIMENSIONS ARE TO BE VERIFIED BY THE CONTRACTOR ON SITE.
4. ALL DISCREPANCIES SHOULD BE REPORTED TO C.A./E.A. PRIOR TO THE COMMENCEMENT OF WORKS.

© CIVIC ENGINEERS LIMITED

| DATE | REV | DESCRIPTION | DRAWN | CHKD |
|---|---|---|---|---|
| 18.10.23 | P01 | ISSUED FOR INFORMATION | TC | JF |

PROJECT
ELECTRIC PARK
POLLARD STREET
PHASE 1

TITLE
DRAINAGE DETAILS
SHEET 6

Civic Engineers
MANCHESTER LONDON LEEDS GLASGOW
Exeter's Warehouse, 77 Quay Street, Manchester, M3 3HZ. Tel: 0161 228 6775
Knollys Mount, 33 Alfred Street, London SE1 3HZ. Tel: 020 7357 0917
1 Saxe Mill Street, Wood Lane, Leeds, LS13 1BW. Tel: 0113 2181 582
Glasgow
www.civicengineers.com

| CE PROJECT No. | SCALE @ A0 | DATE CREATED | DRAWN | CHECKED |
|---|---|---|---|---|
| 969-03 | 1:25 | OCT 23 | TC | -- |

DRAWING STATUS: INFORMATION
STATUS CODE: -
DRAWING No.: 969-03-CIV-XX-XX-D-C-31007
REV: P01

FILE LOCATION PATH: P:\PROJECTS HOT\969-03 ELECTRIC PARK POLLARD STREET PHASE 1\004 BIM\CIVILS\DRAWINGS\969-03-CIV-XX-XX-D-C-31005_DRAINAGE DETAILS SHEET 5.DWG