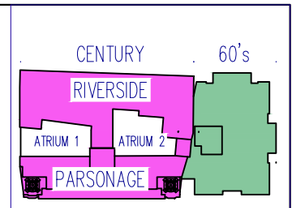

EXTERNAL BUILDING BLOCK PLAN

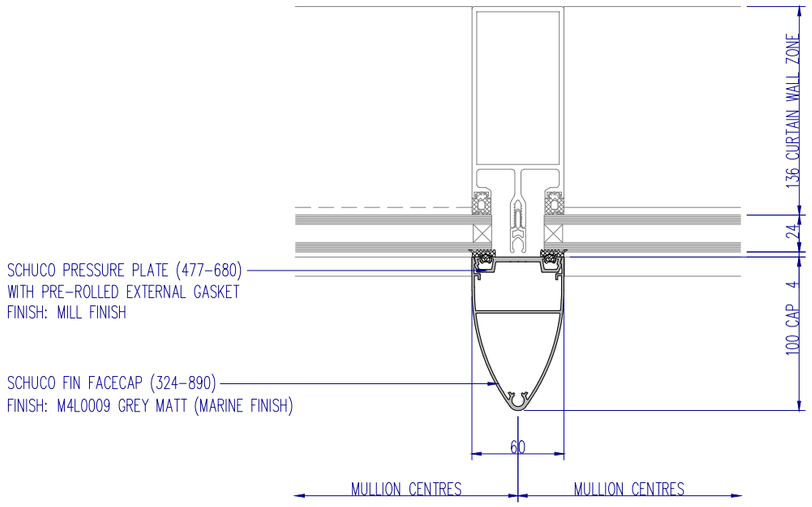

TYPICAL CURTAIN WALL FACECAP REPLACEMENT
FEATURE FIN FACECAP

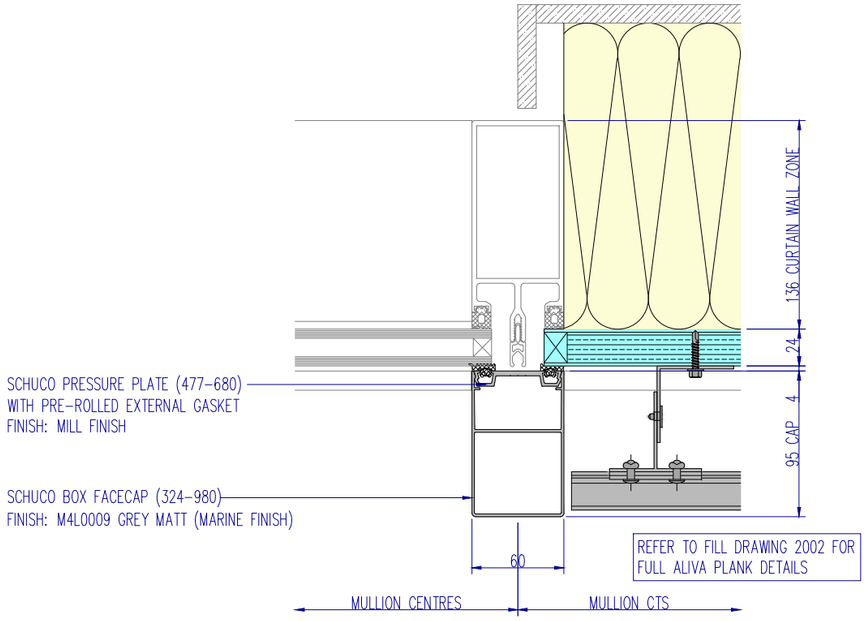

REFER TO FILL DRAWING 2002 FOR
FULL ALIVA PLANK DETAILS

TYPICAL CURTAIN WALL FACECAP REPLACEMENT
FEATURE BOX FACECAP

FILL UK Ltd
UNIT 5
MEADOWBROOK INDUSTRIAL ESTATE
MAXWELL WAY,
CRAWLEY, RH10 9SA
TEL: 020 3859 0705
Email: office@fill-uk.com

NOTES:

REVISION:	DESCRIPTION:	DATE:	DRAWN:
C01	ISSUED FOR CONSTRUCTION	08/09/23	THALL

PROJECT NAME:	PROJECT NUMBER:	CLIENT:
CENTURY BUILDINGS, MANCHESTER	20-M254	CREST NICHOLSON

DRAWING TITLE:
SYSTEM DRAWINGS
REPLACEMENT CURTAIN WALL FEATURE CAPS

DRAWING SCALE:	DRAWING SHEET:	DRAWN BY:	DRAWN DATE:
1:4	A3	T HALL	27/07/2023

DRAWING NUMBER:
M254- FILL-60-ZZ-DR-W-2007
PROJECT | ORIGINATOR | VOLUME | LEVEL | TYPE | ROLE | NUMBER

REVISION: C01