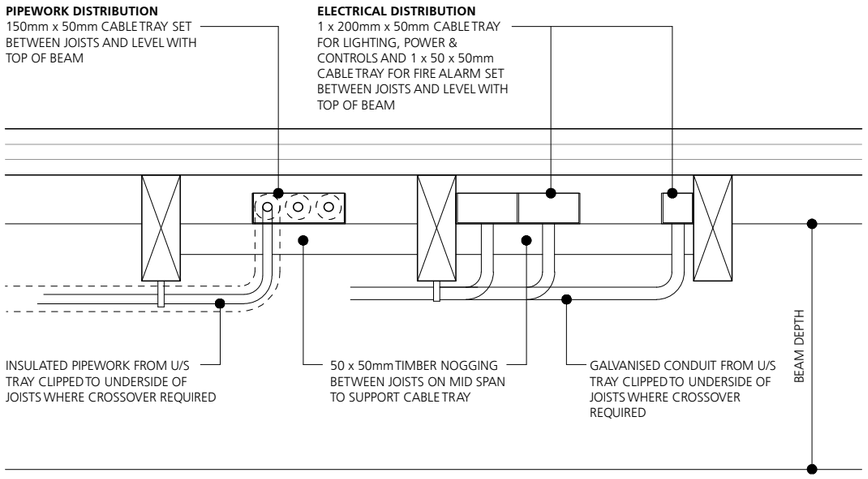

SECTION THROUGH JOISTS

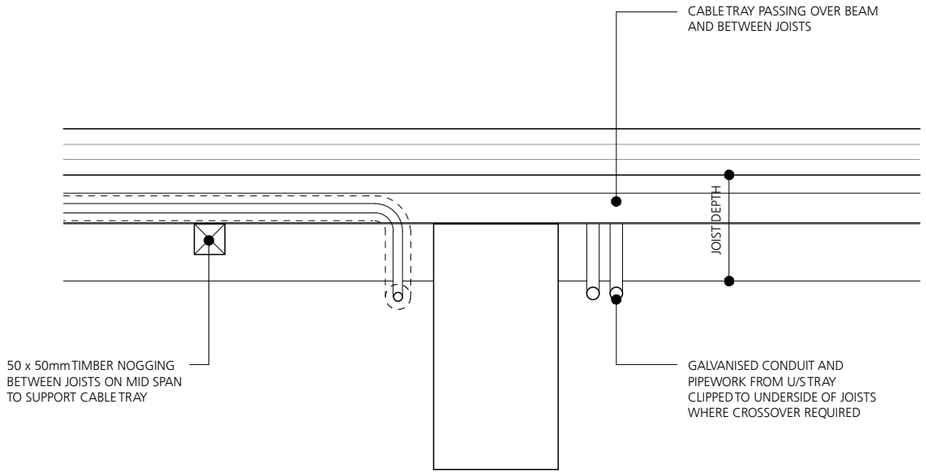

SECTION THROUGH BEAM

0 0.5
metres

Jonathan Davidson Architects
Architecture & Industrial Design
47 Hilton Street
MANCHESTER
M1 2EF
t: 0161 711 0835
e: inbox@jdavidsonarchitects.com
w: www.jdavidsonarchitects.com

Client	Capital & Centric
Project	**Neptune Mill** **Chapeltown St, Manchester**
Scale	1:10 @ A3
Date	Feb2024
Document	**Planning Drawing** **Containment Strategy**
Status	For information
Doc Ref	353 PD 6001 P1