Flap Valves

- Lightweight range of flap valves
- Standard range stocked and available for quick delivery
- Bespoke valves can be custom built to customer's requirements
- Available – wall, spigot or flange mounted
- Low cracking heads
- Easy and quick installation – no need for grout between frame and wall
- Robust and rigid construction
- UV stable
- Fully recyclable
- Materials are corrosion resistant
- Little to no maintenance required
- Manufactured to DIN 19569-4

HDPE Flap Valves from Fernco provide a high strength, low cost solution, preventing backflow through drain or sewerage pipes.

Flap Valves are one-way valves which are installed at the open end of a pipe line or culvert. Their purpose is to allow downstream water to exit the pipe via a one-way flap door, whilst preventing rising water levels outside of the pipe from entering the pipe and flowing back up the system and flooding the protected area. Both lightweight, corrosion resistant our Flap Valves act as Non-Return Valves and check valves for the prevention of reverse flows.

Traditional Flap Valves are manufactured from Cast Iron and whilst Fernco has access to these, our standard range of Flap Valve are manufactured from HDPE, a high strength, thick plastic material which provides a whole host of benefits.

Available in various forms for most installation methods, Fernco Flap Valves can be wall mounted, spigot mounted or available as flange mounted on request.

Fernco Flap Valves incorporate various seals to ensure leakage into the pipe system is prevented. An integrated lip seal made from EPDM creates a watertight seal between the flap and the body of the valve. All Flap Valves are also provided with a strip of self-adhesive neoprene to provide a seal between the valve and the wall (wall mounted Flap Valve) or pipe (spigot Flap Valve).

HDPE Flap Valves - Cracking Head

Standard Flap Valves				Tidal Flap Valves			
Nominal Diameter	Opening Pressure (Cracking Head) Above Water (mm)	Opening Pressure (Cracking Head) Under Water (mm)	Inclination (°)	Nominal Diameter	Opening Pressure (Cracking Head) Above Water (mm)	Opening Pressure (Cracking Head) Under Water (mm)	Inclination (°)
100	10	10	0	100	20	10	10
125	10	10	0	125	20	10	10
150	10	10	0	150	20	10	10
200	10	10	0	200	20	10	10
250	10	10	0	250	20	10	10
300	10	10	0	300	20	10	10
400	10	10	0	400	20	10	10
500	10	10	0	500	20	10	10
600	10	10	0	600	20	10	10

Wall Mounted Flap Valves

HDPE construction

Product Code	Description	A Total Valve Width (mm)	B Total Valve Height (mm)	C Flap width (mm)	Pressure (mwc)	Weight (Kg)
FV100	100mm Wall Mounted Flap Valve	190	230	145	10	1.7
FV125	125mm Wall Mounted Flap Valve	215	255	165	15	2.0
FV150	150mm Wall Mounted Flap Valve	240	280	190	10	2.2
FV200	200mm Wall Mounted Flap Valve	290	330	240	10	2.8
FV250	250mm Wall Mounted Flap Valve	340	380	290	10	3.5
FV300	300mm Wall Mounted Flap Valve	390	430	340	10	4.3

Product Code	Description	A Total Valve Circumf. (Ø)	B Total Valve Height (mm)	C Flap Circumf. (Ø)	Pressure (mwc)	Weight (Kg)
FV400	400mm Wall Mounted Flap Valve	610	640	470	6	9.3
FV500	500mm Wall Mounted Flap Valve	710	740	570	4	12.1
FV600	600mm Wall Mounted Flap Valve	810	855	670	3	15.6

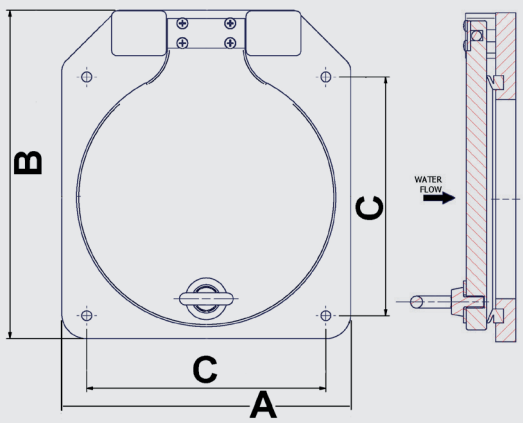

DN100 - 300 version

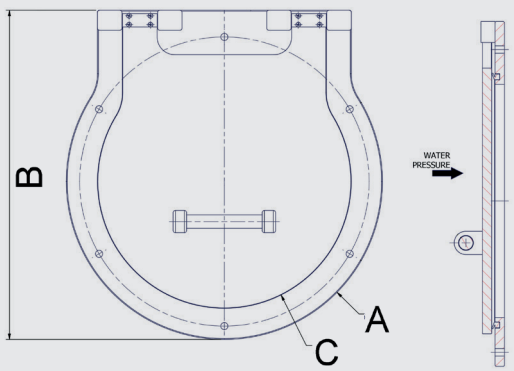

DN400 - 600 version

Wall Mounted Flap Valves

Mounting Sets

Product Code	Description	Size Range (mm)	Bolts (qty)	Chemical Anchor Capsules (qty)
FVMS-01	Flap Valve Mounting Set M8 x4	100-300	4	4
FVMS-02	Flap Valve Mounting Set M12 x6	350-500	6	6
FVMS-03	Flap Valve Mounting Set M12 x7	600	7	7
FVMS-04	Flap Valve Mounting Set M12 x8	750 - 800	8	8
FVMS-05	Flap Valve Mounting Set M12 x9	900	9	9
FVMS-06	Flap Valve Mounting Set M12 x10	1000-1200	10	10

Mounting Sets include:

- M8 capsules & fixings for DN100-300 sizes or M12 capsules & fixings for DN400 sizes and larger;
- Chemical resin capsules;
- Stainless Steel 1.4401 (316) anchor fixings;

Spigot Mounted Flap Valves

HDPE construction

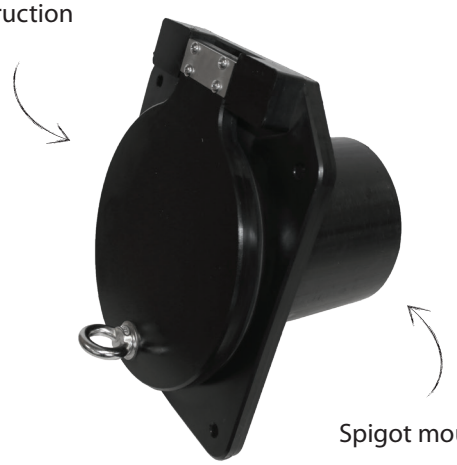

Spigot mount

Product Code	Description	Spigot Diameter	H (mm)	W (mm)	D (mm)	Weight (Kg)
FV100S	100mm Spigot Mounted Flap Valve	80	230	190	250	3.5
FV125S	125mm Spigot Mounted Flap Valve	110	255	215	250	4
FV150S	150mm Spigot Mounted Flap Valve	140	280	240	250	4
FV200S	200mm Spigot Mounted Flap Valve	180	330	290	250	5
FV225S	225mm Spigot Mounted Flap Valve	200	380	340	250	7
FV250S	250mm Spigot Mounted Flap Valve	225	380	340	250	7
FV300S	300mm Spigot Mounted Flap Valve	280	430	390	250	8
FV350S	350mm Spigot Mounted Flap Valve	315	640	610	250	11
FV400S	400mm Spigot Mounted Flap Valve	355	640	610	250	11
FV450S	450mm Spigot Mounted Flap Valve	400	740	710	250	14
FV500S	500mm Spigot Mounted Flap Valve	450	740	710	250	14
FV600S	600mm Spigot Mounted Flap Valve	560	850	810	250	18

Fitting Instructions

Fitting Instructions

Transport

The Flap Valve is to be moved horizontally with flap facing up on a pallet of matching size. The Flap Valve can be lifted with 'soft' suitable slings, using only the lifting points provided (flaps over 25kg only).

- All necessary lifting should be carried out by fully trained personnel
- Only lift the Flap Valve by means of lifting slings and a lifting bar

Storage

- It is recommended to store the Flap Valve horizontally and free of dust, dirt and moisture.

Maintenance

The Flap Valve is constructed in a way that a minimum of maintenance is required.
For a correct functioning of the Flap Valve it is recommended to carry out a visual check annually.

The following parts require attention in particular and need to be cleaned if necessary:

- Sealing (dirt and wear) Sealing EPDM
- In an aggressive environment or in a situation where there is a large amount of silt or debris, it is strongly recommended to increase the inspection interval to suit the location of the Flap Valve.

Installation

General

The wall mounted Flap Valve is mounted to concrete or brick walls using Stainless Steel bolts, nuts, washers and chemical anchor attachments - mounting set sold as separate item to flap valve.

Preparation Prior to Mounting Wall Mounted Flap Valve

Check the mounting supplies:

- EPDM self adhesive seal (5mm thick)
- Chemical anchor capsules and accessories, or mechanical anchors.

On some large flap valves, it may assist installation to remove the flap from the frame before commencing, by removing the necessary bolts.

Check the concrete wall:

1. Check the concrete wall before installing the Flap Valve to ensure the wall is smooth and flat.
   For this application, it may be necessary to remove concrete from the bottom corners of the culvert, to ensure that the corners are square.
2. Correct any deviation. Any possible gravel pockets must be filled out and concrete remains must be removed.

Applying the EPDM seal to the back plate to the Flap valve

100-500mm diameter

For Flap valves in this size range, a pre-cut EPDM seal is supplied, which is self adhesive.
The Flap valve is to be clean from grease, dirt and dust, and the seal is to be fully aligned with the mounting holes.

600mm diameter+

1. Before placing the EPDM seal, ensure that the mounting face is clean and smooth.
2. Fit the seal on the back of the frame.
3. Cut through the holes in the EPDM corresponding to the holes in the flap valve.

Mounting with Chemical Anchor Bolts

1. With suitable lifting slings, lift the Flap valve up and adjust to ensure that it is vertical and level.
2. Lower the Flap Valve into the right position.
3. Check and adjust the Flap valve into the correct position, ensuring that the Flap valve invert is level with the invert of the pipe invert.
4. Mark the mounting holes for the upper corners onto the wall.
5. Remove the Flap Valve and drill the holes to the required depth for the chemical anchors.
   Follow the instructions supplied by the manufacturer of the chemical anchors ensure that the holes are drilled to the correct depth and that the holes are fully cleaned out and free of dust.
   The curing time should be considered precisely.
   ONLY USE THE MOUNTING ACCESSORIES SUPPLIED WITH THE FLAP VALVE.
6. Insert the chemical anchor capsules into the pre-drilled holes.
7. Re-position the Flap Valve to previous position, adjust as necessary.
8. With mounting accessories supplied and suitable electric drill, following chemical anchor instructions insert mounting bolts. The curing time should be considered precisely.
9. After curing time has elapsed fasten hexagon nuts to mounting bolts apply copper grease on anchors and nuts, (use copper grease to prevent the nuts getting stuck on the anchor) and tighten the nuts by hand.
   NOTE: Do not allow the bolts to take the weight of the flap, they have only been installed to assist positioning of the Flap Valve.
10. Check the Flap valve again for correct position.
11. Mark the remaining holes and remove the Flap Valve.
12. Drill remaining holes as above.
13. Re-position the Flap Valve and continue inserting mounting bolts.
14. When all mounting bolts, washers, and nuts are installed, tighten by hand.
15. Once resin has fully cured, tighten bolts to manufacturer's recommended torque compressing the seal evenly to ensure a good seal between the Flap valve and the wall.

General Information

Quality, Standards and Approvals

Fernco has been certified by the British Standards Institution (BSI) as a company of assessed capability, with a quality management system which meets the requirements of BS EN ISO 9001:2015

Fernco UK, part of a global group of companies, are the leaders in wastewater connection innovation; utilising the most advanced methods and techniques for precision-manufactured products, all of which comply with or exceed relevant British and European standards to ensure reliability and sustainability.

Environment

Fernco operate Environmental Management Systems which are certified to ISO 14001: 2015.

Supply

Fernco are proud members of the Builders Merchants Federation (BMF). All Fernco products are supplied through a national and global network of distribution and merchant partners. For stockist details, contact Fernco.

Technical Support

Fernco have a team of product experts on hand to support all customers with technical support and advice.

Contact Fernco Technical Department:

Tel: +44 (0) 1226 344100

Email: technical@fernco.co.uk

Enquiries

UK Sales:

Tel: +44 (0) 1226 340 888

Email: sales@fernco.co.uk

International Sales:

Tel: +44 (0) 1226 344 105

Email: export.dept@fernco.co.uk