GENERAL NOTES

DO NOT SCALE FROM THIS DRAWING WORK TO FIGURED DIMENSIONS ONLY.

NO DEVIATION FROM THE DETAILS SHOWN ON THIS DRAWING IS ALLOWED WITHOUT PRIOR PERMISSION IN WRITING.

ALL DRAWINGS ARE TO BE READ IN CONJUNCTION WITH ALL ARCHITECTS, ENGINEERS AND SPECIALISTS DRAWINGS AND THE SPECIFICATION.

THE CONTRACTOR SHALL INCORPORATE ALL THE REQUIREMENTS OF THE PRE-TENDER STAGE HEALTH AND SAFETY PLAN.

THIS DRAWING IS TO BE READ IN CONJUNCTION WITH WML DRAINAGE DETAIL DRAWINGS FOR DETAILS OF MATERIALS AND WORKMANSHIP REFER TO THE SPECIFICATION.

THE CONTRACTOR IS RESPONSIBLE FOR CHECKING INVERT LEVELS AND POSITIONS OF ALL EXISTING DRAINS, SEWERS, INSPECTION CHAMBERS AND MANHOLES SHOWN ON THIS DRAWING IMMEDIATELY ON SITE ESTABLISHMENT. ANY DISCREPANCIES MUST BE REPORTED TO WML CONSULTING IMMEDIATELY.

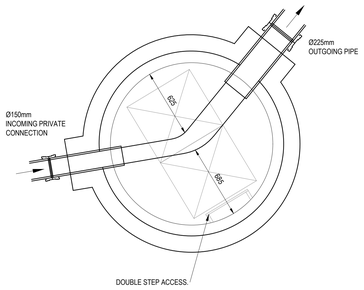

MANHOLE REF	SETTING OUT	COVER LEVEL	INVERT LEVEL	DEPTH TO SOFFIT	MANHOLE DIAMETER	MANHOLE COVER	MANHOLE TYPE	COVER SLAB OPENING
F1	E:381020.085 N:387627.995	51.623m	50.429m	0.969m	1.500m	1200x675 D400 150mm DEEP	PCC TYPE 4	1200x675

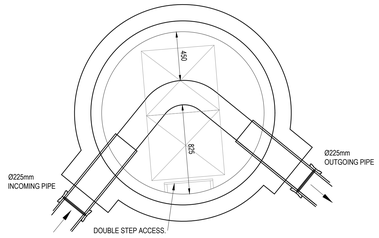

MANHOLE REF	SETTING OUT	COVER LEVEL	INVERT LEVEL	DEPTH TO SOFFIT	MANHOLE DIAMETER	MANHOLE COVER	MANHOLE TYPE	COVER SLAB OPENING
F2	E:381024.850 N:387633.465	51.479m	50.284m	0.970m	1.500m	1200x675 D400 150mm DEEP	PCC TYPE 4	1200x675

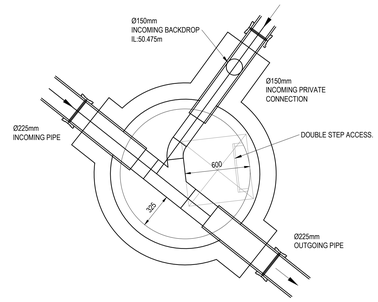

MANHOLE REF	SETTING OUT	COVER LEVEL	INVERT LEVEL	DEPTH TO SOFFIT	MANHOLE DIAMETER	MANHOLE COVER	MANHOLE TYPE	COVER SLAB OPENING
F3	E:381045.570 N:387617.545	51.945m	49.830m	1.890m	1.200m	600x600 D400 150mm DEEP	PCC TYPE 1	750x600

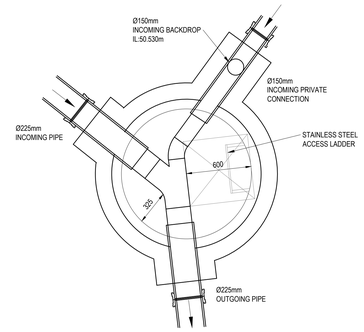

MANHOLE REF	SETTING OUT	COVER LEVEL	INVERT LEVEL	DEPTH TO SOFFIT	MANHOLE DIAMETER	MANHOLE COVER	MANHOLE TYPE	COVER SLAB OPENING
F4	E:381060.475 N:387605.620	52.261m	49.561m	2.475m	1.200m	600x600 D400 150mm DEEP	PCC TYPE 1	750x600

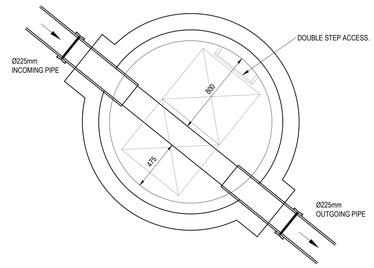

MANHOLE REF	SETTING OUT	COVER LEVEL	INVERT LEVEL	DEPTH TO SOFFIT	MANHOLE DIAMETER	MANHOLE COVER	MANHOLE TYPE	COVER SLAB OPENING
F5	E:381049.640 N:387687.715	50.248m	48.775m	1.248m	1.500m	1200x675 D400 150mm DEEP	PCC TYPE 4	1200x675

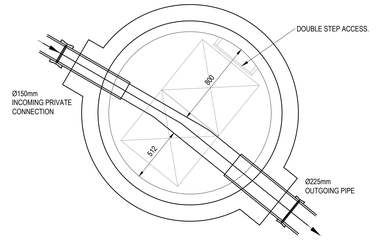

MANHOLE REF	SETTING OUT	COVER LEVEL	INVERT LEVEL	DEPTH TO SOFFIT	MANHOLE DIAMETER	MANHOLE COVER	MANHOLE TYPE	COVER SLAB OPENING
F5.12	E:381037.265 N:387697.860	50.550m	48.985m	1.340m	1.500m	1200x675 D400 150mm DEEP	PCC TYPE 4	1200x675

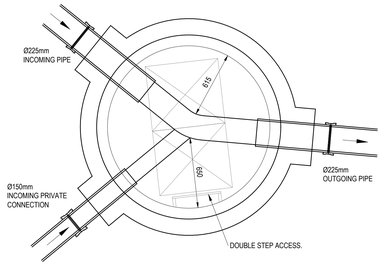

MANHOLE REF	SETTING OUT	COVER LEVEL	INVERT LEVEL	DEPTH TO SOFFIT	MANHOLE DIAMETER	MANHOLE COVER	MANHOLE TYPE	COVER SLAB OPENING
F6	E:381060.600 N:387678.865	50.019m	48.530m	1.264m	1.500m	1200x675 D400 150mm DEEP	PCC TYPE 4	1200x675

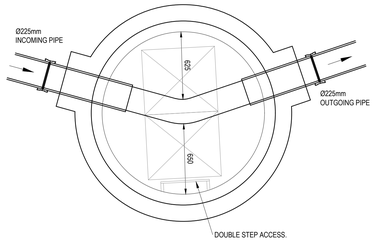

MANHOLE REF	SETTING OUT	COVER LEVEL	INVERT LEVEL	DEPTH TO SOFFIT	MANHOLE DIAMETER	MANHOLE COVER	MANHOLE TYPE	COVER SLAB OPENING
F7	E:381065.600 N:387678.430	49.892m	48.493m	1.174m	1.500m	1200x675 D400 150mm DEEP	PCC TYPE 4	1200x675

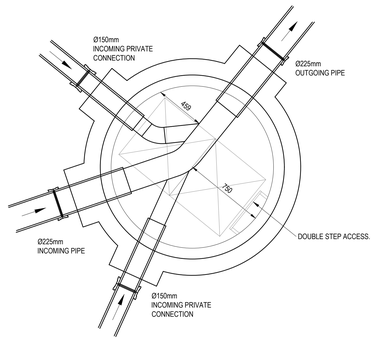

MANHOLE REF	SETTING OUT	COVER LEVEL	INVERT LEVEL	DEPTH TO SOFFIT	MANHOLE DIAMETER	MANHOLE COVER	MANHOLE TYPE	COVER SLAB OPENING
F8	E:381070.335 N:387680.035	49.802m	48.315m	1.262m	1.500m	1200x675 D400 150mm DEEP	PCC TYPE 4	1200x675

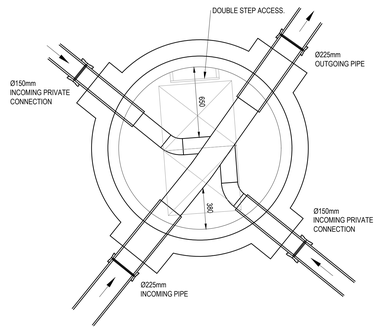

MANHOLE REF	SETTING OUT	COVER LEVEL	INVERT LEVEL	DEPTH TO SOFFIT	MANHOLE DIAMETER	MANHOLE COVER	MANHOLE TYPE	COVER SLAB OPENING
F9	E:381091.665 N:387706.705	49.065m	47.545m	1.295m	1.500m	1200x675 D400 150mm DEEP	PCC TYPE 4	1200x675

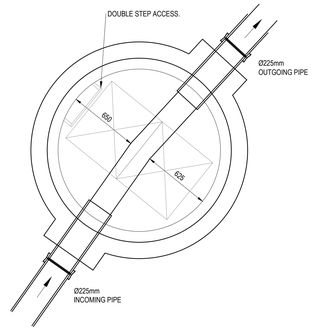

MANHOLE REF	SETTING OUT	COVER LEVEL	INVERT LEVEL	DEPTH TO SOFFIT	MANHOLE DIAMETER	MANHOLE COVER	MANHOLE TYPE	COVER SLAB OPENING
F10	E:381100.325 N:387718.760	48.640	46.932m	1.483m	1.500m	1200x675 D400 150mm DEEP	PCC TYPE 4	1200x675

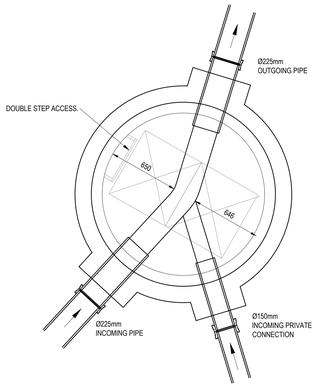

MANHOLE REF	SETTING OUT	COVER LEVEL	INVERT LEVEL	DEPTH TO SOFFIT	MANHOLE DIAMETER	MANHOLE COVER	MANHOLE TYPE	COVER SLAB OPENING
F11	E:381100.325 N:387718.760	48.228	46.283m	1.717m	1.500m	1200x675 D400 150mm DEEP	PCC TYPE 4	1200x675

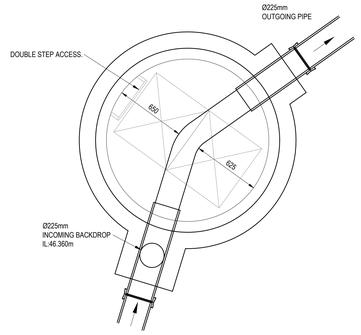

MANHOLE REF	SETTING OUT	COVER LEVEL	INVERT LEVEL	DEPTH TO SOFFIT	MANHOLE DIAMETER	MANHOLE COVER	MANHOLE TYPE	COVER SLAB OPENING
F12	E:381110.030 N:387735.705	47.770	45.519m	2.026m	1.500m	1200x675 D400 150mm DEEP	PCC TYPE 4	1200x675

ROCKER PIPES TO BE INSTALLED ON ALL RIGID PIPES. JOINT TO BE AS CLOSE AS POSSIBLE TO FACE OF ALL MANHOLES TO PERMIT SATISFACTORY JOINT AND SUBSEQUENT MOVEMENT.

THE RECOMMENDED LENGTH OF THE NEXT PIPE (ROCKER PIPE) AWAY FROM THE MANHOLE FROM SEWERS FOR ADOPTION (6TH EDITION) SHOULD BE AS SHOWN IN THE TABLE BELOW:

NOMINAL DIA. (mm)	EFFECTIVE LENGTH (m)
150 TO 600	0.6
675 TO 750	1.0
825 & OVER	1.25

WHERE LADDERS ARE USED, SEATING RINGS TO BE TURNED 180° TO ENSURE 600x600 ACCESS IS MAINTAINED WITH THE INCLUSION OF LADDERS.

ALL LATERAL CONNECTIONS TO BE MADE AT SOFFIT LEVEL TO THE MAIN CHANNEL

SUBJECT TO APPROVAL FROM AND UNITED UTILITIES

FINAL CONSTRUCTION

WML DRAWINGS ARE FINAL CONSTRUCTION RECORD DRAWINGS INCORPORATING ANY AS-BUILT INFORMATION SUPPLIED BY THE CONTRACTOR

Rev.	Amendment	Date	By	Chkd
R01	FINAL CONSTRUCTION ISSUE.	11.01.24	DB	LoG

Project
GLENDENE,
WYTHENSHAWE

CLIENT
BTP ARCHITECTS

Title
SECTION 104 - MANHOLE SCHEDULE SHEET 3
FOUL WATER

Drawn	Checked	Date	Scale
DB	LoG	SEPT 21	AS NOTED @ A0

WML CONSULTING
Chartered Civil and Structural Engineers
No.8 Oak Green
Earl Road
Stanley Green Business Park
Cheadle Hulme
Cheshire SK8 6QL
Tel: 0161 482 0600
Fax: 0161 486 9210
e-mail info@wmlconsulting.com
www.wmlconsulting.com

Project	Originator	Volume	Level	Type	Role	Number	Rev
9003	WML	ZZ	XX	DR	C	1023	R01

GENERAL NOTES

DO NOT SCALE FROM THIS DRAWING WORK TO FIGURED DIMENSIONS ONLY.

NO DEVIATION FROM THE DETAILS SHOWN ON THIS DRAWING IS ALLOWED WITHOUT PRIOR PERMISSION IN WRITING.

ALL DRAWINGS ARE TO BE READ IN CONJUNCTION WITH ALL ARCHITECTS, ENGINEERS AND SPECIALISTS DRAWINGS AND THE SPECIFICATION.

THE CONTRACTOR SHALL INCORPORATE ALL THE REQUIREMENTS OF THE PRE-TENDER STAGE HEALTH AND SAFETY PLAN.

THIS DRAWING IS TO BE READ IN CONJUNCTION WITH WML DRAINAGE DETAIL DRAWINGS FOR DETAILS OF MATERIALS AND WORKMANSHIP REFER TO THE SPECIFICATION.

THE CONTRACTOR IS RESPONSIBLE FOR CHECKING INVERT LEVELS AND POSITIONS OF ALL EXISTING DRAINS, SEWERS, INSPECTION CHAMBERS AND MANHOLES SHOWN ON THIS DRAWING IMMEDIATELY ON SITE ESTABLISHMENT. ANY DISCREPANCIES MUST BE REPORTED TO WML CONSULTING IMMEDIATELY.

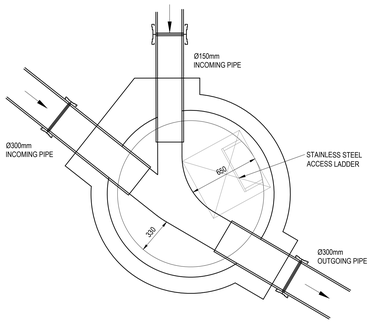

MANHOLE REF	SETTING OUT	COVER LEVEL	INVERT LEVEL	DEPTH TO SOFFIT	MANHOLE DIAMETER	MANHOLE COVER	MANHOLE TYPE	COVER SLAB OPENING
C1	E:381060.460 N:387603.335	52.330m	49.424	2.606m	1.350m	600x600 D400 150mm DEEP	PCC TYPE 1	750x600

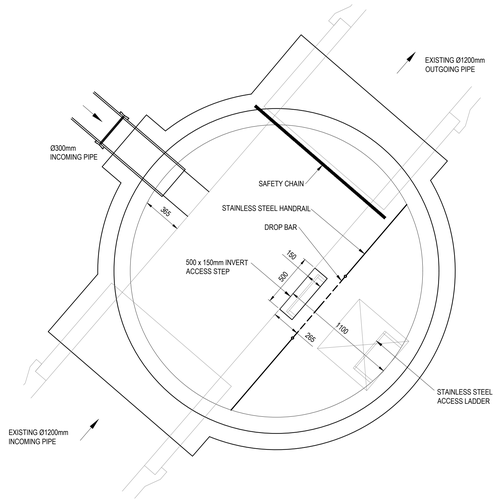

MANHOLE REF	SETTING OUT	COVER LEVEL	INVERT LEVEL	DEPTH TO SOFFIT	MANHOLE DIAMETER	MANHOLE COVER	MANHOLE TYPE	COVER SLAB OPENING
C2	E:381065.025 N:387599.425	52.423m	49.400	2.723	2.700m	600x600 D400 150mm DEEP	PCC TYPE 2	750x600

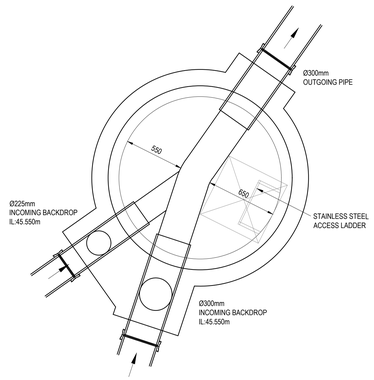

MANHOLE REF	SETTING OUT	COVER LEVEL	INVERT LEVEL	DEPTH TO SOFFIT	MANHOLE DIAMETER	MANHOLE COVER	MANHOLE TYPE	COVER SLAB OPENING
C3	E:381113.195 N:387737.890	47.646m	44.042m	3.304m	1.500m	600x600 D400 150mm DEEP	PCC TYPE 1	750x600

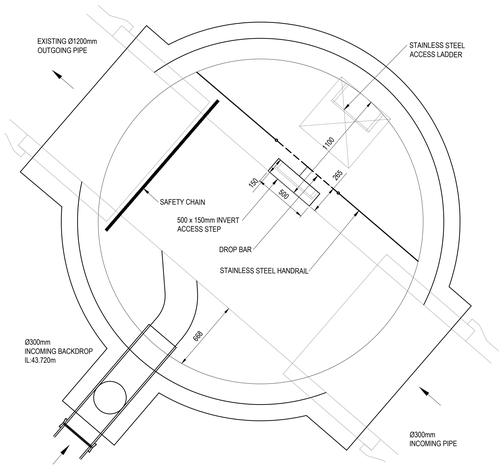

MANHOLE REF	SETTING OUT	COVER LEVEL	INVERT LEVEL	DEPTH TO SOFFIT	MANHOLE DIAMETER	MANHOLE COVER	MANHOLE TYPE	COVER SLAB OPENING
C4	E:381116.025 N:387742.005	47.395m	42.220	3.825	3.000m	1200x675 D400 150mm DEEP	PCC TYPE 2	750x600

ROCKER PIPES TO BE INSTALLED ON ALL RIGID PIPES. JOINT TO BE AS CLOSE AS POSSIBLE TO FACE OF ALL MANHOLES TO PERMIT SATISFACTORY JOINT AND SUBSEQUENT MOVEMENT.

THE RECOMMENDED LENGTH OF THE NEXT PIPE (ROCKER PIPE) AWAY FROM THE MANHOLE FROM SEWERS FOR ADOPTION (6TH EDITION) SHOULD BE AS SHOWN IN THE TABLE BELOW:

NOMINAL DIA. (mm)	EFFECTIVE LENGTH (m)
150 TO 600	0.6
675 TO 750	1.0
825 & OVER	1.25

WHERE LADDERS ARE USED, SEATING RINGS TO BE TURNED 180° TO ENSURE 600x600 ACCESS IS MAINTAINED WITH THE INCLUSION OF LADDERS.

ALL LATERAL CONNECTIONS TO BE MADE AT SOFFIT LEVEL TO THE MAIN CHANNEL.

SUBJECT TO APPROVAL FROM AND UNITED UTILITIES

FINAL CONSTRUCTION

WML DRAWINGS ARE FINAL CONSTRUCTION RECORD DRAWINGS INCORPORATING ANY AS-BUILT INFORMATION SUPPLIED BY THE CONTRACTOR

Rev.	Amendment	Date	By	Chkd
R01	FINAL CONSTRUCTION ISSUE.	11.01.24	DB	LoG

Project
GLENDENE,
WYTHENSHAWE

CLIENT
BTP ARCHITECTS

Title
SECTION 104 - MANHOLE SCHEDULE SHEET 4
COMBINED WATER

Drawn	Checked	Date	Scale
DB	LoG	SEPT 21	AS NOTED @ A0

WML CONSULTING
Chartered Civil and Structural Engineers
No.8 Oak Green
Earl Road
Stanley Green Business Park
Cheadle Hulme
Cheshire SK8 6QL
Tel: 0161 482 0600
Fax: 0161 486 9210
e-mail info@wmlconsulting.com
www.wmlconsulting.com

Project	Originator	Volume	Level	Type	Role	Number	Rev
9003	WML	ZZ	XX	DR	C	1024	R01

NOTE:

THE SETTING OUT CO-ORDINATES SHOWN ON THIS DRAWING ARE BASED ON THE OS GRID.

DRAWING KEY:

- DENOTES EXISTING GROUND PROFILE
- DENOTES PROPOSED ACCESS ROAD PROFILE
- DENOTES ADOPTABLE SURFACE WATER SEWER
- DENOTES ADOPTABLE FOUL WATER SEWER
- DENOTES ADOPTABLE COMBINED WATER SEWER

GENERAL NOTES

DO NOT SCALE FROM THIS DRAWING WORK TO FIGURED DIMENSIONS ONLY.

NO DEVIATION FROM THE DETAILS SHOWN ON THIS DRAWING IS ALLOWED WITHOUT PRIOR PERMISSION IN WRITING.

ALL DRAWINGS ARE TO BE READ IN CONJUNCTION WITH ALL ARCHITECTS, ENGINEERS AND SPECIALISTS DRAWINGS AND THE SPECIFICATION.

THE CONTRACTOR SHALL INCORPORATE ALL THE REQUIREMENTS OF THE PRE-TENDER STAGE HEALTH AND SAFETY PLAN.

THIS DRAWING IS TO BE READ IN CONJUNCTION WITH WML DRAINAGE DETAIL DRAWINGS FOR DETAILS OF MATERIALS AND WORKMANSHIP REFER TO THE SPECIFICATION.

THE CONTRACTOR IS RESPONSIBLE FOR CHECKING INVERT LEVELS AND POSITIONS OF ALL EXISTING DRAINS, SEWERS, INSPECTION CHAMBERS AND MANHOLES SHOWN ON THIS DRAWING IMMEDIATELY ON SITE ESTABLISHMENT. ANY DISCREPANCIES MUST BE REPORTED TO WML CONSULTING IMMEDIATELY.

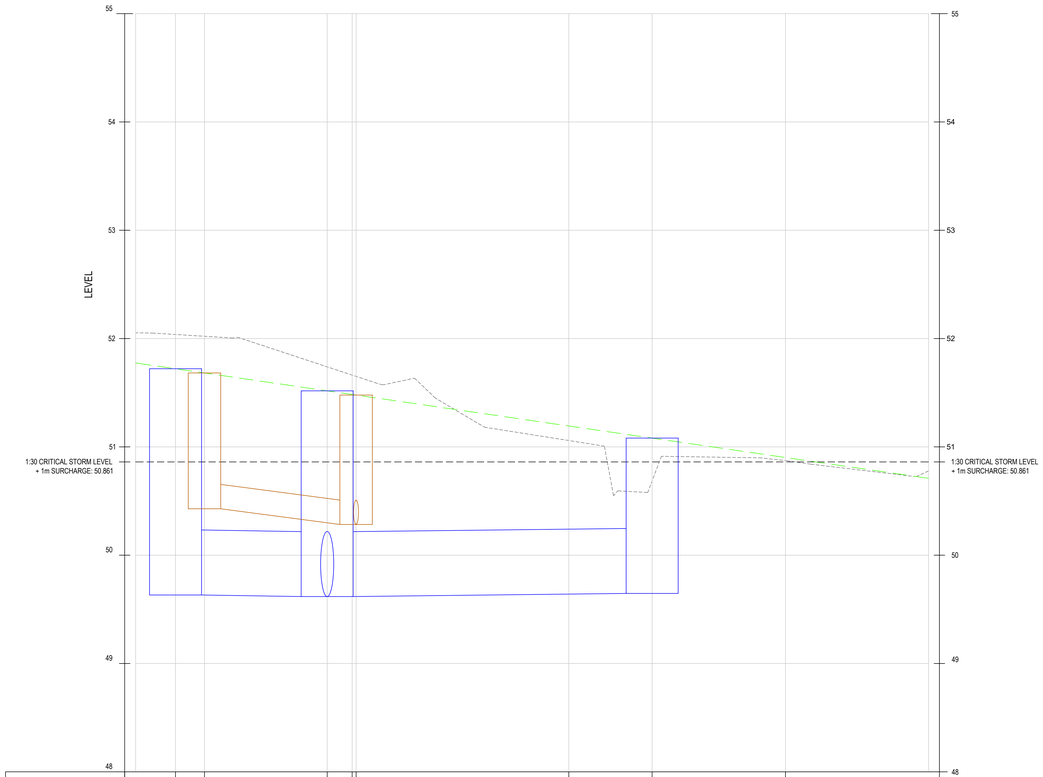

CHAINAGE	1.845	3.180	8.845	10.000 10.180	20.000	33.845	36.000
EXISTING LEVELS				51.653	51.059		50.874
PROPOSED LEVELS				51.484	51.193		50.902
HORIZONTAL GEOMETRY							
VERTICAL GEOMETRY	G=-1:34.4 L=36.602						
SURFACE WATER DRAIN		NEW MH S2 Ø2400mm CL: 50.680 IL: 49.633 DTS: 1.447m NEW Ø600 @ 1:466 CONC PUBLIC SURFACE SEWER CLASS S BED & SURROUND		NEW MH S3 Ø2400mm CL: 51.548 IL: 49.618 DTS: 1.330m NEW Ø600 @ 1:517 CONC PUBLIC SURFACE SEWER CONCRETE SURROUND		NEW MH S1 Ø2400mm CL: 51.022 IL: 49.647 DTS: 0.775m	
FOUL WATER DRAIN		NEW MH F1 Ø1500mm CL: 51.623 IL: 50.429 DTS: 0.969m NEW Ø225 @ 1:48 ESVC PUBLIC FOUL SEWER CONCRETE SURROUND		NEW MH F2 Ø1500mm CL: 51.479 IL: 50.284 DTS: 0.970m			

ACCESS ROAD 1 - ALIGNMENT 1 LONGITUDINAL SECTION

[SCALE 1:100 @ A0]

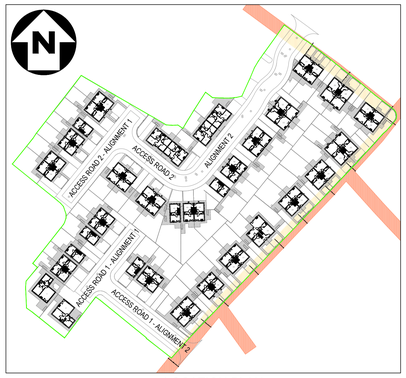

LOCATION PLAN

[SCALE 1:1000]

SUBJECT TO APPROVAL FROM AND UNITED UTILITIES

FINAL CONSTRUCTION

WML DRAWINGS ARE FINAL CONSTRUCTION RECORD DRAWINGS INCORPORATING ANY AS-BUILT INFORMATION SUPPLIED BY THE CONTRACTOR

Rev.	Amendment	Date	By	Chkd
R01	FINAL CONSTRUCTION ISSUE.	11.01.24	DB	LoG

Project: GLENDENE, WYTHENSHAWE

CLIENT: BTP ARCHITECTS

Title: SECTION 104 - LONG SECTIONS SHEET 1

Drawn	Checked	Date	Scale
DB	LoG	SEPT 21	1:200 @ A0

WML CONSULTING
Chartered Civil and Structural Engineers

No.8 Oak Green
Earl Road
Stanley Green Business Park
Cheadle Hulme
Cheshire SK8 6QL
Tel: 0161 482 0600
Fax: 0161 486 9210
e-mail info@wmlconsulting.com
www.wmlconsulting.com

Project	Originator	Volume	Level	Type	Role	Number	Rev
9003	WML	ZZ	XX	DR	C	1031	R01

NOTE:

THE SETTING OUT CO-ORDINATES SHOWN ON THIS DRAWING ARE BASED ON THE OS GRID.

DRAWING KEY:

- DENOTES EXISTING GROUND PROFILE
- DENOTES PROPOSED ACCESS ROAD PROFILE
- DENOTES ADOPTABLE SURFACE WATER SEWER
- DENOTES ADOPTABLE FOUL WATER SEWER
- DENOTES ADOPTABLE COMBINED WATER SEWER

GENERAL NOTES

DO NOT SCALE FROM THIS DRAWING WORK TO FIGURED DIMENSIONS ONLY.

NO DEVIATION FROM THE DETAILS SHOWN ON THIS DRAWING IS ALLOWED WITHOUT PRIOR PERMISSION IN WRITING.

ALL DRAWINGS ARE TO BE READ IN CONJUNCTION WITH ALL ARCHITECTS, ENGINEERS AND SPECIALISTS DRAWINGS AND THE SPECIFICATION.

THE CONTRACTOR SHALL INCORPORATE ALL THE REQUIREMENTS OF THE PRE-TENDER STAGE HEALTH AND SAFETY PLAN.

THIS DRAWING IS TO BE READ IN CONJUNCTION WITH WML DRAINAGE DETAIL DRAWINGS FOR DETAILS OF MATERIALS AND WORKMANSHIP REFER TO THE SPECIFICATION.

THE CONTRACTOR IS RESPONSIBLE FOR CHECKING INVERT LEVELS AND POSITIONS OF ALL EXISTING DRAINS, SEWERS, INSPECTION CHAMBERS AND MANHOLES SHOWN ON THIS DRAWING IMMEDIATELY ON SITE ESTABLISHMENT. ANY DISCREPANCIES MUST BE REPORTED TO WML CONSULTING IMMEDIATELY.

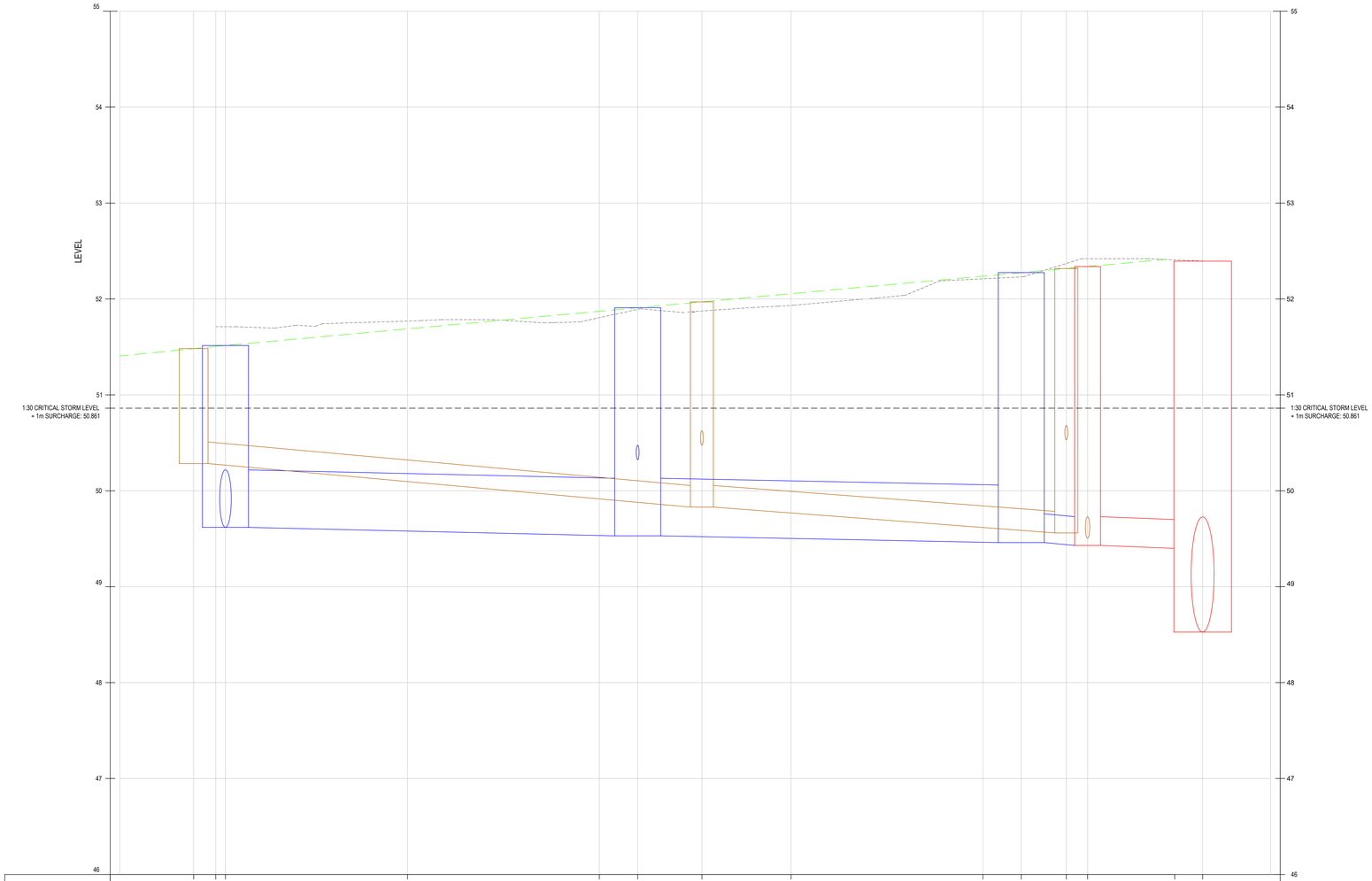

| | | |

NOTE:

THE SETTING OUT CO-ORDINATES SHOWN ON THIS DRAWING ARE BASED ON THE OS GRID.

DRAWING KEY:

- DENOTES EXISTING GROUND PROFILE
- DENOTES PROPOSED ACCESS ROAD PROFILE
- DENOTES ADOPTABLE SURFACE WATER SEWER
- DENOTES ADOPTABLE FOUL WATER SEWER
- DENOTES ADOPTABLE COMBINED WATER SEWER

GENERAL NOTES

DO NOT SCALE FROM THIS DRAWING WORK TO FIGURED DIMENSIONS ONLY.

NO DEVIATION FROM THE DETAILS SHOWN ON THIS DRAWING IS ALLOWED WITHOUT PRIOR PERMISSION IN WRITING.

ALL DRAWINGS ARE TO BE READ IN CONJUNCTION WITH ALL ARCHITECTS, ENGINEERS AND SPECIALISTS DRAWINGS AND THE SPECIFICATION.

THE CONTRACTOR SHALL INCORPORATE ALL THE REQUIREMENTS OF THE PRE-TENDER STAGE HEALTH AND SAFETY PLAN.

THIS DRAWING IS TO BE READ IN CONJUNCTION WITH WML DRAINAGE DETAIL DRAWINGS FOR DETAILS OF MATERIALS AND WORKMANSHIP REFER TO THE SPECIFICATION.

THE CONTRACTOR IS RESPONSIBLE FOR CHECKING INVERT LEVELS AND POSITIONS OF ALL EXISTING DRAINS, SEWERS, INSPECTION CHAMBERS AND MANHOLES SHOWN ON THIS DRAWING IMMEDIATELY ON SITE ESTABLISHMENT. ANY DISCREPANCIES MUST BE REPORTED TO WML CONSULTING IMMEDIATELY.

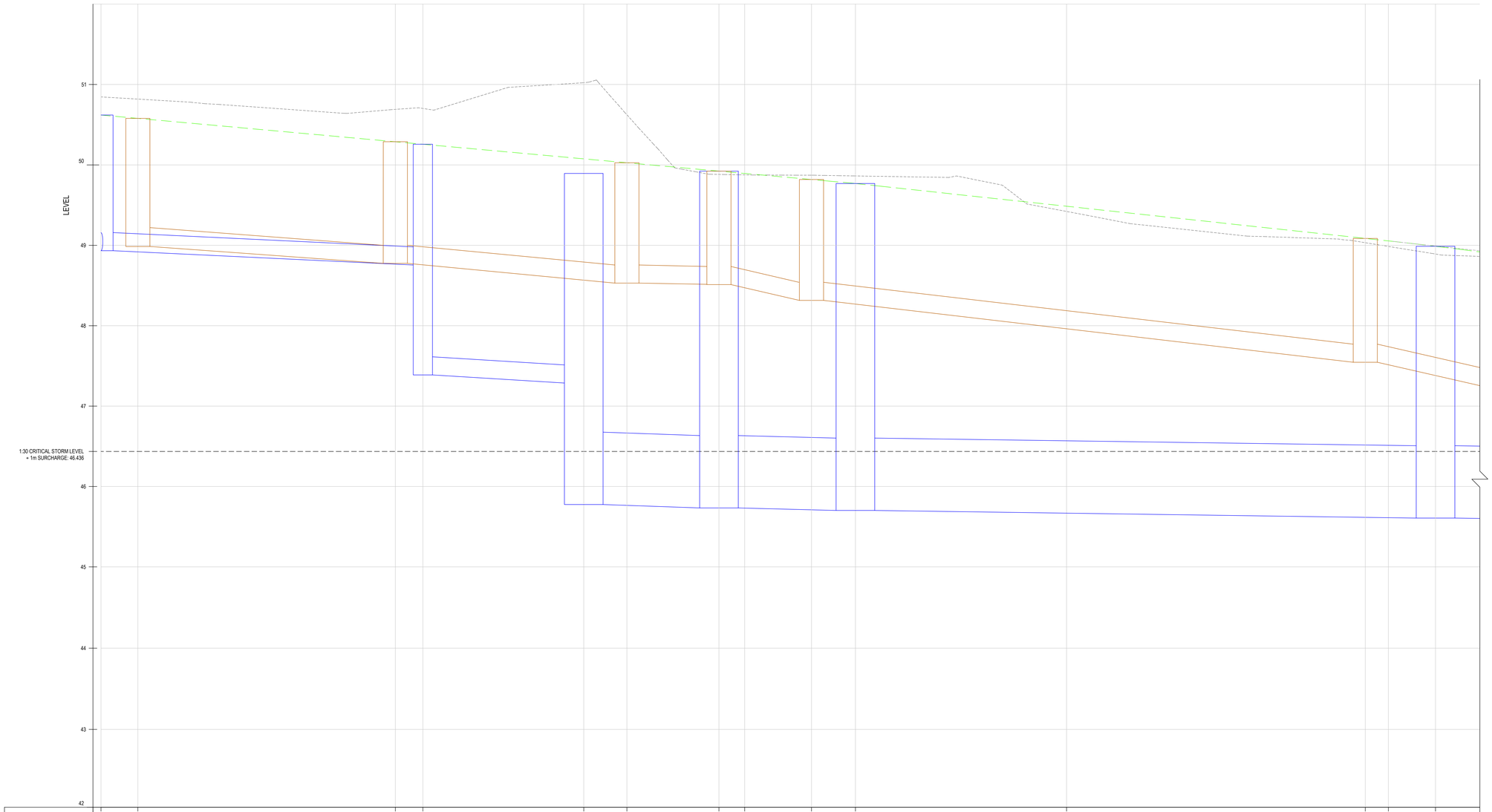

CHAINAGE	0.000, 2.290, 18.290, 20.000, 30.000, 32.681, 38.400, 40.000, 44.151, 46.882, 60.000, 78.566, 80.000, 82.931
EXISTING LEVELS	50.102, 49.876, 49.421, 48.986
PROPOSED LEVELS	50.658, 50.301, 50.257, 50.078, 49.924, 49.894, 49.801, 49.765, 49.733, 49.486, 49.205, 49.203, 48.993
HORIZONTAL GEOMETRY	L=17.550; L=12.318; R=10.7 L=16.886; L=35.955
VERTICAL GEOMETRY	Gi=1:55.1 L=45.111; L=3.4 R=1000.0 K=10.0; Go=1:46.4 L=31.773
SURFACE WATER DRAIN	NEW MH S5.8 Ø1500mm CL: 50.658 IL: 48.933 DTS: 1.500m; NEW Ø225 @ 1:112 ESVC PUBLIC SURFACE SEWER CLASS S BED & SURROUND; NEW MH S5 Ø1200mm CL: 50.239 IL: 47.388 DTS: 2.626m; NEW Ø225 @ 1:113 ESVC PUBLIC SURFACE SEWER CLASS S BED & SURROUND; NEW MH S6 Ø2400mm CL: 50.068 IL: 45.776 DTS: 3.392m; NEW Ø900 @ 1:209 CONC PUBLIC SURFACE SEWER CLASS S BED & SURROUND; NEW MH S7 Ø2400mm CL: 49.912 IL: 45.733 DTS: 3.279m; NEW Ø900 @ 1:290 CONC PUBLIC SURFACE SEWER CLASS S BED & SURROUND; NEW MH S8 Ø2400mm CL: 49.774 IL: 45.702 DTS: 3.172m; NEW Ø900 @ 1:379 CONC PUBLIC SURFACE SEWER CLASS S BED & SURROUND; NEW MH S9 Ø2400mm CL: 48.981 IL: 45.607 DTS: 2.474m
FOUL WATER DRAIN	NEW MH F5.12 Ø1500mm CL: 50.550 IL: 48.985 DTS: 1.340m; NEW Ø225 @ 1:76 ESVC PUBLIC FOUL SEWER CLASS S BED & SURROUND; NEW MH F5 Ø1500mm CL: 50.248 IL: 48.775 DTS: 1.248m; NEW Ø225 @ 1:57 ESVC PUBLIC FOUL SEWER CLASS S BED & SURROUND; NEW MH F6 Ø1500mm CL: 50.019 IL: 48.530 DTS: 1.264m; NEW Ø225 @ 1:45 ESVC PUBLIC FOUL SEWER CLASS S BED & SURROUND; NEW MH F7 Ø1500mm CL: 49.892 IL: 48.493 DTS: 1.174m; NEW Ø225 @ 1:50 ESVC PUBLIC FOUL SEWER CLASS S BED & SURROUND; NEW MH F8 Ø1500mm CL: 49.802 IL: 48.315 DTS: 1.262m; NEW Ø225 @ 1:44 ESVC PUBLIC FOUL SEWER CLASS S BED & SURROUND; NEW MH F9 Ø1500mm CL: 49.065 IL: 47.545 DTS: 1.295m; N ESVC CLASS
COMBINED WATER DRAIN	

ACCESS ROAD 2 - ALIGNMENT 2

[SCALE 1:100]

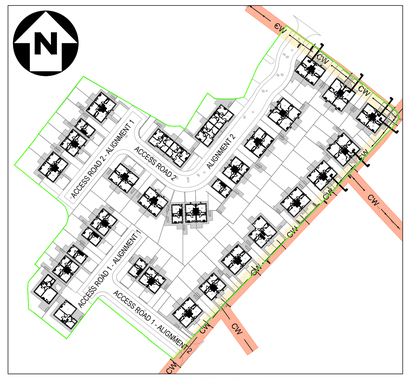

LOCATION PLAN

[SCALE 1:1000]

SUBJECT TO APPROVAL FROM AND UNITED UTILITIES

FINAL CONSTRUCTION

WML DRAWINGS ARE FINAL CONSTRUCTION RECORD DRAWINGS INCORPORATING ANY AS-BUILT INFORMATION SUPPLIED BY THE CONTRACTOR

Rev.	Amendment	Date	By	Chkd
R01	FINAL CONSTRUCTION ISSUE.	11.01.24	DB	LoG

Project: GLENDENE, WYTHENSHAWE

CLIENT: BTP ARCHITECTS

Title: SECTION 104 - LONG SECTIONS SHEET 3

Drawn	Checked	Date	Scale
DB	LoG	SEPT 21	1:200 @ A0

WML CONSULTING
Chartered Civil and Structural Engineers
No.8 Oak Green
Earl Road
Stanley Green Business Park
Cheadle Hulme
Cheshire SK8 6QL
Tel 0161 482 0600
Fax 0161 486 9210
e-mail info@wmlconsulting.com
www.wmlconsulting.com

Project	Originator	Volume	Level	Type	Role	Number	Rev
9003	WML	ZZ	XX	DR	C	1033	R01

NOTE:

THE SETTING OUT CO-ORDINATES SHOWN ON THIS DRAWING ARE BASED ON THE OS GRID.

DRAWING KEY:

- DENOTES EXISTING GROUND PROFILE
- DENOTES PROPOSED ACCESS ROAD PROFILE
- DENOTES ADOPTABLE SURFACE WATER SEWER
- DENOTES ADOPTABLE FOUL WATER SEWER
- DENOTES ADOPTABLE COMBINED WATER SEWER

GENERAL NOTES

DO NOT SCALE FROM THIS DRAWING WORK TO FIGURED DIMENSIONS ONLY.

NO DEVIATION FROM THE DETAILS SHOWN ON THIS DRAWING IS ALLOWED WITHOUT PRIOR PERMISSION IN WRITING.

ALL DRAWINGS ARE TO BE READ IN CONJUNCTION WITH ALL ARCHITECTS, ENGINEERS AND SPECIALISTS DRAWINGS AND THE SPECIFICATION.

THE CONTRACTOR SHALL INCORPORATE ALL THE REQUIREMENTS OF THE PRE-TENDER STAGE HEALTH AND SAFETY PLAN.

THIS DRAWING IS TO BE READ IN CONJUNCTION WITH WML DRAINAGE DETAIL DRAWINGS FOR DETAILS OF MATERIALS AND WORKMANSHIP REFER TO THE SPECIFICATION.

THE CONTRACTOR IS RESPONSIBLE FOR CHECKING INVERT LEVELS AND POSITIONS OF ALL EXISTING DRAINS, SEWERS, INSPECTION CHAMBERS AND MANHOLES SHOWN ON THIS DRAWING IMMEDIATELY ON SITE ESTABLISHMENT. ANY DISCREPANCIES MUST BE REPORTED TO WML CONSULTING IMMEDIATELY.

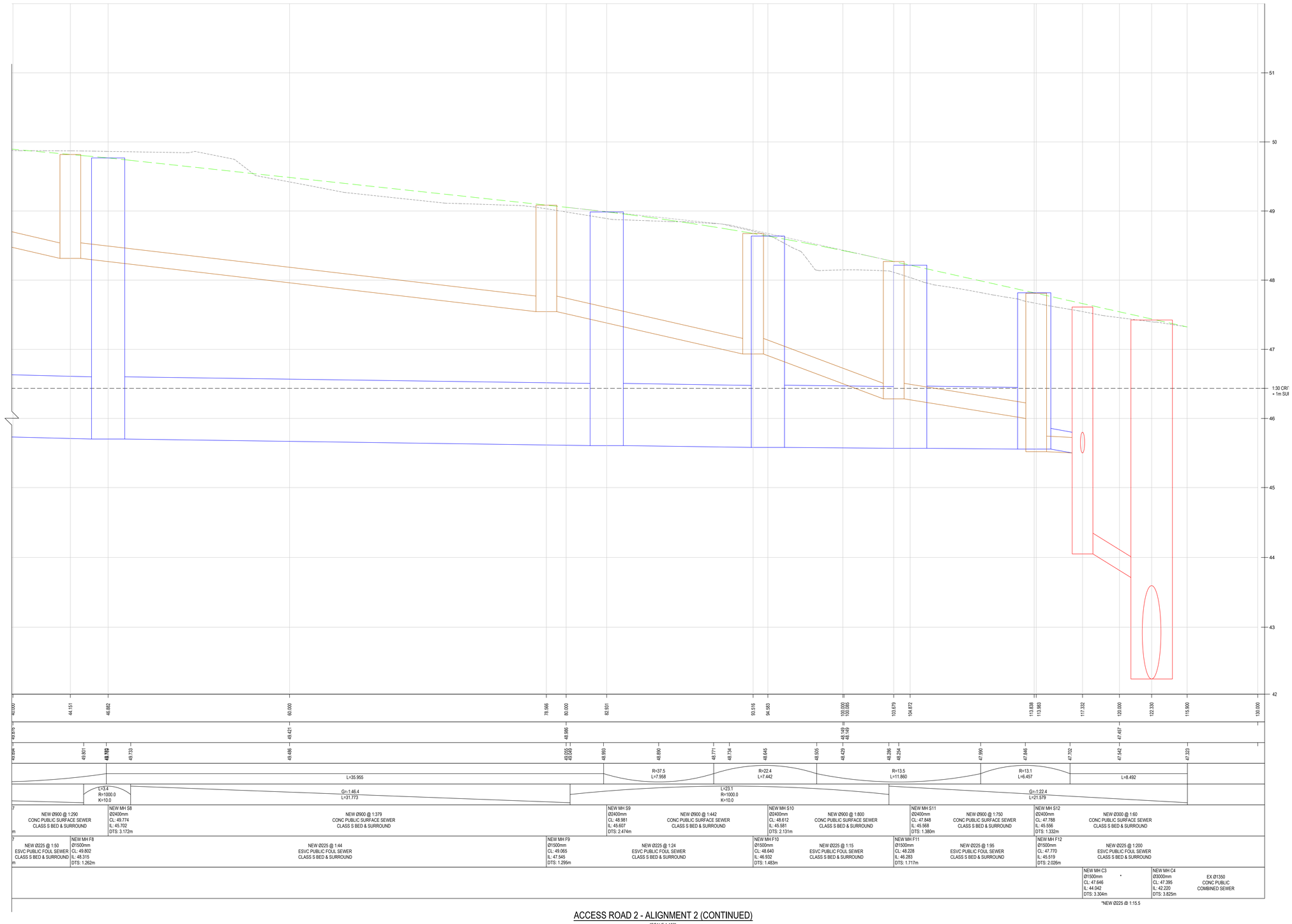

ACCESS ROAD 2 - ALIGNMENT 2 (CONTINUED)

[SCALE 1:100]

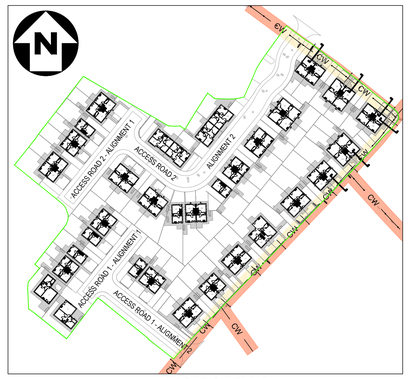

LOCATION PLAN

[SCALE 1:1000]

SUBJECT TO APPROVAL FROM AND UNITED UTILITIES

FINAL CONSTRUCTION

WML DRAWINGS ARE FINAL CONSTRUCTION RECORD DRAWINGS INCORPORATING ANY AS-BUILT INFORMATION SUPPLIED BY THE CONTRACTOR

Rev.	Amendment	Date	By	Chkd
R01	FINAL CONSTRUCTION ISSUE.	11.01.24	DB	LoG

Project
GLENDENE,
WYTHENSHAWE

CLIENT
BTP ARCHITECTS

Title
SECTION 104 - LONG SECTIONS
SHEET 4

Drawn	Checked	Date	Scale
DB	LoG	SEPT 21	1:200 @ A0

WML CONSULTING
Chartered Civil and Structural Engineers
No.8 Oak Green
Earl Road
Stanley Green Business Park
Cheadle Hulme
Cheshire SK8 6QL
Tel 0161 482 0600
Fax 0161 486 9210
e-mail info@wmlconsulting.com
www.wmlconsulting.com

Project	Originator	Volume	Level	Type	Role	Number	Rev
9003	WML	ZZ	XX	DR	C	1034	R01

NOTE:

THE SETTING OUT CO-ORDINATES SHOWN ON THIS DRAWING ARE BASED ON THE OS GRID.

DRAWING KEY:

- DENOTES EXISTING GROUND PROFILE
- DENOTES PROPOSED ACCESS ROAD PROFILE
- DENOTES ADOPTABLE SURFACE WATER SEWER
- DENOTES ADOPTABLE FOUL WATER SEWER
- DENOTES ADOPTABLE COMBINED WATER SEWER

GENERAL NOTES

DO NOT SCALE FROM THIS DRAWING WORK TO FIGURED DIMENSIONS ONLY.

NO DEVIATION FROM THE DETAILS SHOWN ON THIS DRAWING IS ALLOWED WITHOUT PRIOR PERMISSION IN WRITING.

ALL DRAWINGS ARE TO BE READ IN CONJUNCTION WITH ALL ARCHITECTS, ENGINEERS AND SPECIALISTS DRAWINGS AND THE SPECIFICATION.

THE CONTRACTOR SHALL INCORPORATE ALL THE REQUIREMENTS OF THE PRE-TENDER STAGE HEALTH AND SAFETY PLAN.

THIS DRAWING IS TO BE READ IN CONJUNCTION WITH WML DRAINAGE DETAIL DRAWINGS FOR DETAILS OF MATERIALS AND WORKMANSHIP REFER TO THE SPECIFICATION.

THE CONTRACTOR IS RESPONSIBLE FOR CHECKING INVERT LEVELS AND POSITIONS OF ALL EXISTING DRAINS, SEWERS, INSPECTION CHAMBERS AND MANHOLES SHOWN ON THIS DRAWING IMMEDIATELY ON SITE ESTABLISHMENT. ANY DISCREPANCIES MUST BE REPORTED TO WML CONSULTING IMMEDIATELY.

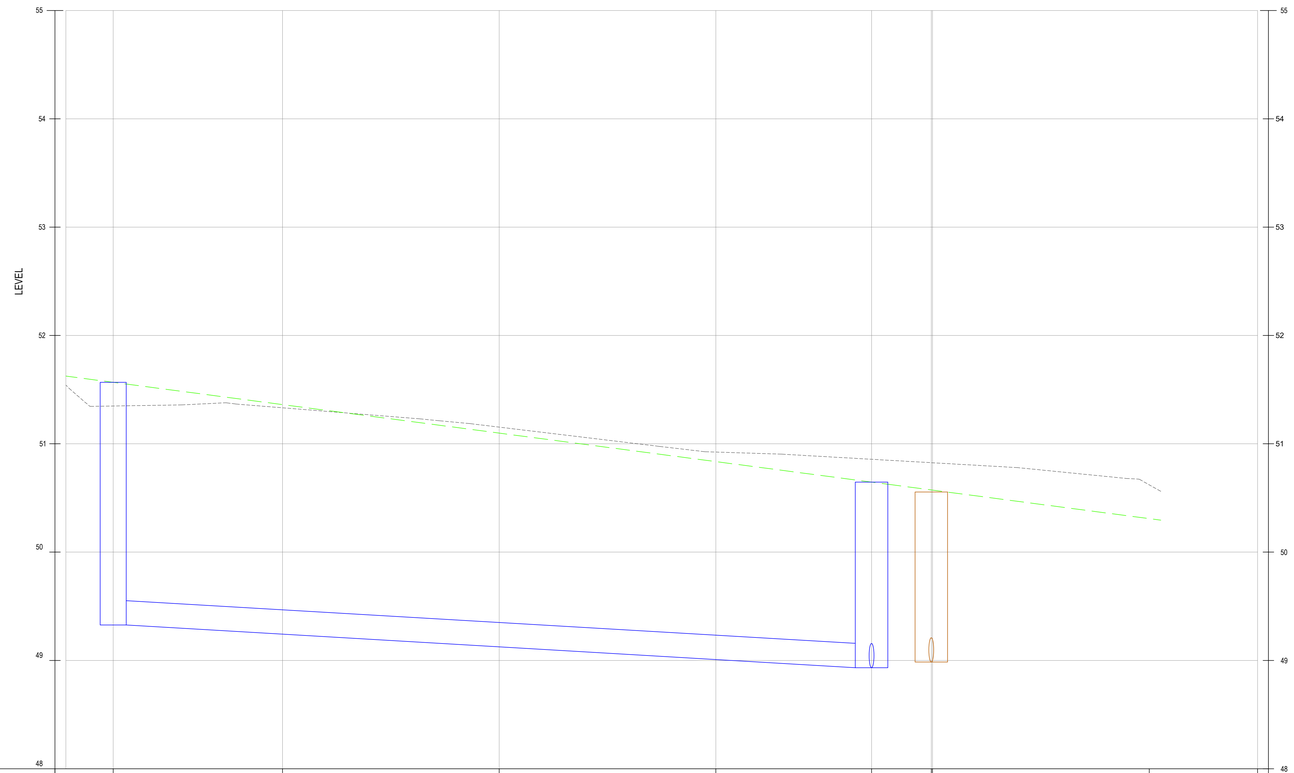

CHAINAGE	1.892	10.000	20.000	30.000	37.186	38.844	40.000	50.000	55.000	
EXISTING LEVELS		51.324	51.154	50.924			50.825	50.821		
PROPOSED LEVELS	51.625 / 51.565	51.362	51.099	50.838	50.643	50.620	50.552 / 50.512	50.309 / 50.295		
HORIZONTAL GEOMETRY	L=38.190						L=12.345			
VERTICAL GEOMETRY	G=-1:38.0 L=38.190						G=-1:38.0 L=12.345			
SURFACE WATER DRAIN	NEW MH S5.3 Ø1200mm CL: 51.572 IL: 49.327 DTS: 2.020m		NEW Ø225 @ 1:89 ESVC PUBLIC SURFACE SEWER CLASS S BED & SURROUND			NEW MH S5.8 Ø1500mm CL: 50.658 IL: 48.933 DTS: 1.500m		NEW Ø225 @ 1:112 ESVC PUBLIC SURFACE SEWER CLASS S BED & SURROUND		
FOUL WATER DRAIN							NEW MH F5.12 Ø1500mm CL: 50.550 IL: 48.985 DTS: 1.340m	NEW Ø225 @ 1:100 ESVC PUBLIC FOUL SEWER CLASS S BED & SURROUND		
COMBINED WATER DRAIN										

ACCESS ROAD 2 - ALIGNMENT 1

[SCALE 1:100]

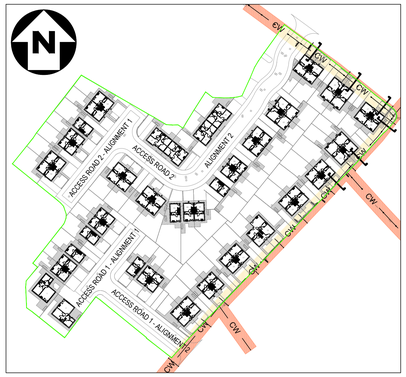

LOCATION PLAN

[SCALE 1:1000]

SUBJECT TO APPROVAL FROM AND UNITED UTILITIES

FINAL CONSTRUCTION

WML DRAWINGS ARE FINAL CONSTRUCTION RECORD DRAWINGS INCORPORATING ANY AS-BUILT INFORMATION SUPPLIED BY THE CONTRACTOR

Rev.	Amendment	Date	By	Chkd
R01	FINAL CONSTRUCTION ISSUE.	11.01.24	DB	LoG

Project: GLENDENE, WYTHENSHAWE

CLIENT: BTP ARCHITECTS

Title: SECTION 104 - LONG SECTIONS SHEET 5

Drawn	Checked	Date	Scale
DB	LoG	SEPT 21	1:200 @ A0

WML CONSULTING Chartered Civil and Structural Engineers

No.8 Oak Green
Earl Road
Stanley Green Business Park
Cheadle Hulme
Cheshire SK8 6QL
Tel: 0161 482 0600
Fax: 0161 486 9210
e-mail info@wmlconsulting.com
www.wmlconsulting.com

Project	Originator	Volume	Level	Type	Role	Number	Rev
9003	WML	ZZ	XX	DR	C	1035	R01

APPENDIX B

Surface water drainage calculations

WML CONSULTING
Civil, Structural and Geotechnical Engineers

Surface Water Drainage Calculations

For a site referred to as

Glendene, Wythenshawe

Undertaken on behalf of

Garden City Design & Build Ltd.

Job No: 9003

Document No: 9003-WML-00-XX-CA-C-0001

Date: January 2024

Project No. & Name:	9003 – Glendene, Wythenshawe	Status:	Prepared by:	Rev:	Date:
Document Ref:	9003-WML-00-XX-CA-C-0001	Final Construction	Daniel Baker	R01	Jan 2024

General Notes

1. The calculations within this document have been undertaken using MicroDrainage Software version 2020.

2. This document is to be read in conjunction with the following documents;

    a. 9003-WML-ZZ-XX-DR-C-1001 - 1005 – Proposed Drainage GAs
    b. 9003-WML-ZZ-XX-RP-C-1001 – Drainage Strategy Document

Summary of Results

3. The following summary demonstrates that the outgoing flow rates for the new development works are less than or equal to those of the pre-development site.

4. The existing site comprises a combination of Greenfield and Brownfield areas as shown within appendix 01 below.

5. Greenfield Areas have been calculated using MicoDrainage Software version 2020 whilst the existing Brownfield flow rate has been calculated using a 50mm/Hr rainfall intensity as noted within the drainage strategy.

Existing		
Greenfield Runoff Rate (l/s)	Brownfield Runoff Rate (l/s)	Proposed Site Runoff Rate - Total (l/s)
Q1: 4.3 Q30: 8.3 Q100: 10.2	72.9 36.4 - Allowable (50% reduction)	4.3 +36.4 = 40.7

Proposed				
Proposed Site Runoff Rate - South (l/s)	Proposed Site Runoff Rate - North (l/s)	Actual Site Runoff Rate - South (l/s)	Actual Site Runoff Rate - North (l/s)	Actual Site Runoff Rate - Total (l/s)
10.0	30.0	9.9	30.0	39.9

6. The following calculations are associated with the adoptable drainage only and don't take into account the extensive private drainage network which will provide an additional storage volume and further reduce the risk of flooding.

Existing Site Area Plan

LEGEND

EXISTING BROWNFIELD AREA: 5,249m²

EXISTING GREENFIELD AREA: 8,909m²

Greenfield Runoff Assessment

ICP SUDS Mean Annual Flood

Input

Return Period (years)	100	Soil	0.450
Area (ha)	0.891	Urban	0.000
SAAR (mm)	849	Region Number	Region 10

Results	**l/s**
QBAR Rural	4.9
QBAR Urban	4.9
Q100 years	10.2
Q1 year	4.3
Q30 years	8.3
Q100 years	10.2

©1982-2020 Innovyze

Proposed Surface Water Network
(South)

STORM SEWER DESIGN by the Modified Rational Method

Design Criteria for Storm

Pipe Sizes STANDARD Manhole Sizes STANDARD

FSR Rainfall Model - England and Wales

Return Period (years)	100	PIMP (%)	100
M5-60 (mm)	18.000	Add Flow / Climate Change (%)	0
Ratio R	0.360	Minimum Backdrop Height (m)	0.200
Maximum Rainfall (mm/hr)	50	Maximum Backdrop Height (m)	1.500
Maximum Time of Concentration (mins)	30	Min Design Depth for Optimisation (m)	1.200
Foul Sewage (l/s/ha)	0.000	Min Vel for Auto Design only (m/s)	1.00
Volumetric Runoff Coeff.	0.750	Min Slope for Optimisation (1:X)	500

Designed with Level Soffits

Network Design Table for Storm

PN	Length (m)	Fall (m)	Slope (1:X)	I.Area (ha)	T.E. (mins)	Base Flow (l/s)	k (mm)	HYD SECT	DIA (mm)	Section Type	Auto Design
S1.000	15.000	0.029	517.2	0.041	5.00	0.0	0.600	o	600	Pipe/Conduit	
S2.000	7.000	0.015	466.7	0.056	5.00	0.0	0.600	o	600	Pipe/Conduit	
S1.001	22.000	0.088	250.0	0.034	0.00	0.0	0.600	o	600	Pipe/Conduit	
S1.002	20.000	0.073	274.0	0.021	0.00	0.0	0.600	o	600	Pipe/Conduit	
S1.003	2.981	0.033	90.3	0.040	0.00	0.0	0.600	o	300	Pipe/Conduit	
S1.004	6.009	0.024	250.4	0.000	0.00	0.0	0.600	o	300	Pipe/Conduit	

Network Results Table

PN	Rain (mm/hr)	T.C. (mins)	US/IL (m)	Σ I.Area (ha)	Σ Base Flow (l/s)	Foul (l/s)	Add Flow (l/s)	Vel (m/s)	Cap (l/s)	Flow (l/s)
S1.000	50.00	5.24	49.647	0.041	0.0	0.0	0.0	1.06	300.8	5.6
S2.000	50.00	5.10	49.633	0.056	0.0	0.0	0.0	1.12	316.8	7.6
S1.001	50.00	5.47	49.618	0.131	0.0	0.0	0.0	1.54	434.2	17.7
S1.002	50.00	5.70	49.530	0.152	0.0	0.0	0.0	1.47	414.6	20.6
S1.003	50.00	5.73	49.457	0.192	0.0	0.0	0.0	1.65	117.0	26.0
S1.004	50.00	5.83	49.424	0.192	0.0	0.0	0.0	0.99	69.9	26.0

©1982-2020 Innovyze

Manhole Schedules for Storm

MH Name	MH CL (m)	MH Depth (m)	MH Connection	MH Diam.,L*W (mm)	Pipe Out PN	Pipe Out Invert Level (m)	Pipe Out Diameter (mm)	Pipes In PN	Pipes In Invert Level (m)	Pipes In Diameter (mm)	Backdrop (mm)
S1	51.022	1.375	Open Manhole	2400	S1.000	49.647	600				
S2	51.680	2.047	Open Manhole	2400	S2.000	49.633	600				
S3	51.548	1.930	Open Manhole	2400	S1.001	49.618	600	S1.000	49.618	600	
								S2.000	49.618	600	
S3A	51.851	2.321	Open Manhole	2400	S1.002	49.530	600	S1.001	49.530	600	
S4	52.216	2.759	Open Manhole	2400	S1.003	49.457	300	S1.002	49.457	600	
S-C1	52.330	2.906	Open Manhole	1350	S1.004	49.424	300	S1.003	49.424	300	
S	52.390	2.990	Open Manhole	0		OUTFALL		S1.004	49.400	300	

MH Name	Manhole Easting (m)	Manhole Northing (m)	Intersection Easting (m)	Intersection Northing (m)	Manhole Access	Layout (North)
S1	381034.560	387642.835	381034.560	387642.835	Required	
S2	381020.730	387625.726	381020.730	387625.726	Required	
S3	381025.130	387631.170	381025.130	387631.170	Required	
S3A	381042.373	387617.507	381042.373	387617.507	Required	
S4	381058.049	387605.086	381058.049	387605.086	Required	
S-C1	381060.462	387603.335	381060.462	387603.335	Required	
S	381065.026	387599.426			No Entry	

©1982-2020 Innovyze

PIPELINE SCHEDULES for Storm

Upstream Manhole

PN	Hyd Sect	Diam (mm)	MH Name	C.Level (m)	I.Level (m)	D.Depth (m)	MH Connection	MH DIAM., L*W (mm)
S1.000	o	600	S1	51.022	49.647	0.775	Open Manhole	2400
S2.000	o	600	S2	51.680	49.633	1.447	Open Manhole	2400
S1.001	o	600	S3	51.548	49.618	1.330	Open Manhole	2400
S1.002	o	600	S3A	51.851	49.530	1.721	Open Manhole	2400
S1.003	o	300	S4	52.216	49.457	2.459	Open Manhole	2400
S1.004	o	300	S-C1	52.330	49.424	2.606	Open Manhole	1350

Downstream Manhole

PN	Length (m)	Slope (1:X)	MH Name	C.Level (m)	I.Level (m)	D.Depth (m)	MH Connection	MH DIAM., L*W (mm)
S1.000	15.000	517.2	S3	51.548	49.618	1.330	Open Manhole	2400
S2.000	7.000	466.7	S3	51.548	49.618	1.330	Open Manhole	2400
S1.001	22.000	250.0	S3A	51.851	49.530	1.721	Open Manhole	2400
S1.002	20.000	274.0	S4	52.216	49.457	2.159	Open Manhole	2400
S1.003	2.981	90.3	S-C1	52.330	49.424	2.606	Open Manhole	1350
S1.004	6.009	250.4	S	52.390	49.400	2.690	Open Manhole	0

Free Flowing Outfall Details for Storm

Outfall Pipe Number	Outfall Name	C. Level (m)	I. Level (m)	Min I. Level (m)	D,L (mm)	W (mm)
S1.004	S	52.390	49.400	0.000	0	0

Simulation Criteria for Storm

Volumetric Runoff Coeff	0.750	Additional Flow - % of Total Flow	0.000
Areal Reduction Factor	1.000	MADD Factor * 10m³/ha Storage	2.000
Hot Start (mins)	0	Inlet Coeffiecient	0.800
Hot Start Level (mm)	0	Flow per Person per Day (l/per/day)	0.000
Manhole Headloss Coeff (Global)	0.500	Run Time (mins)	60
Foul Sewage per hectare (l/s)	0.000	Output Interval (mins)	1

Number of Input Hydrographs	0	Number of Storage Structures	0
Number of Online Controls	1	Number of Time/Area Diagrams	0
Number of Offline Controls	0	Number of Real Time Controls	0

Synthetic Rainfall Details

©1982-2020 Innovyze

Synthetic Rainfall Details

Rainfall Model	FSR	Profile Type	Summer
Return Period (years)	100	Cv (Summer)	0.750
Region	England and Wales	Cv (Winter)	0.840
M5-60 (mm)	18.000	Storm Duration (mins)	30
Ratio R	0.360		

©1982-2020 Innovyze

Online Controls for Storm

Hydro-Brake® Optimum Manhole: S4, DS/PN: S1.003, Volume (m³): 17.5

Unit Reference	MD-SHE-0137-1000-1600-1000
Design Head (m)	1.600
Design Flow (l/s)	10.0
Flush-Flo™	Calculated
Objective	Minimise upstream storage
Application	Surface
Sump Available	Yes
Diameter (mm)	137
Invert Level (m)	49.457
Minimum Outlet Pipe Diameter (mm)	150
Suggested Manhole Diameter (mm)	1200

Control Points	Head (m)	Flow (l/s)
Design Point (Calculated)	1.600	10.0
Flush-Flo™	0.472	10.0
Kick-Flo®	0.989	8.0
Mean Flow over Head Range	-	8.7

The hydrological calculations have been based on the Head/Discharge relationship for the Hydro-Brake® Optimum as specified. Should another type of control device other than a Hydro-Brake Optimum® be utilised then these storage routing calculations will be invalidated

Depth (m)	Flow (l/s)	Depth (m)	Flow (l/s)	Depth (m)	Flow (l/s)	Depth (m)	Flow (l/s)
0.100	4.9	1.200	8.7	3.000	13.4	7.000	20.1
0.200	8.8	1.400	9.4	3.500	14.5	7.500	20.8
0.300	9.6	1.600	10.0	4.000	15.4	8.000	21.5
0.400	9.9	1.800	10.5	4.500	16.3	8.500	22.1
0.500	10.0	2.000	11.1	5.000	17.1	9.000	22.7
0.600	9.9	2.200	11.6	5.500	17.9	9.500	23.3
0.800	9.4	2.400	12.1	6.000	18.7		
1.000	8.0	2.600	12.5	6.500	19.4		

©1982-2020 Innovyze

2 year Return Period Summary of Critical Results by Maximum Level (Rank 1) for Storm

Simulation Criteria

Areal Reduction Factor 1.000 Additional Flow - % of Total Flow 0.000
Hot Start (mins) 0 MADD Factor * 10m³/ha Storage 2.000
Hot Start Level (mm) 0 Inlet Coeffiecient 0.800
Manhole Headloss Coeff (Global) 0.500 Flow per Person per Day (l/per/day) 0.000
Foul Sewage per hectare (l/s) 0.000

Number of Input Hydrographs 0 Number of Storage Structures 0
Number of Online Controls 1 Number of Time/Area Diagrams 0
Number of Offline Controls 0 Number of Real Time Controls 0

Synthetic Rainfall Details

Rainfall Model FSR Ratio R 0.360
Region England and Wales Cv (Summer) 0.750
M5-60 (mm) 18.000 Cv (Winter) 0.840

Margin for Flood Risk Warning (mm) 300.0
Analysis Timestep 2.5 Second Increment (Extended)
DTS Status OFF
DVD Status ON
Inertia Status ON

Profile(s) Summer and Winter
Duration(s) (mins) 15, 30, 60, 120, 180, 240, 360, 480, 600, 720, 960, 1440
Return Period(s) (years) 2, 30, 100
Climate Change (%) 0, 0, 40

PN	US/MH Name	Storm	Return Period	Climate Change	First (X) Surcharge	First (Y) Flood	First (Z) Overflow	Overflow Act.
S1.000	S1	30 Winter	2	+0%	100/15 Summer	100/60 Winter		
S2.000	S2	30 Winter	2	+0%	100/15 Summer			
S1.001	S3	30 Winter	2	+0%	100/15 Summer			
S1.002	S3A	30 Winter	2	+0%	100/15 Summer			
S1.003	S4	30 Winter	2	+0%	2/15 Winter			
S1.004	S-C1	30 Winter	2	+0%				

PN	US/MH Name	Water Level (m)	Surcharged Depth (m)	Flooded Volume (m³)	Flow / Cap.	Overflow (l/s)	Half Drain Time (mins)	Pipe Flow (l/s)	Status
S1.000	S1	49.780	-0.467	0.000	0.03			4.4	OK
S2.000	S2	49.779	-0.454	0.000	0.03			6.1	OK
S1.001	S3	49.779	-0.439	0.000	0.04			12.6	OK
S1.002	S3A	49.778	-0.352	0.000	0.03			9.9	OK
S1.003	S4	49.777	0.020	0.000	0.15			9.3	SURCHARGED
S1.004	S-C1	49.512	-0.212	0.000	0.19			9.3	OK

©1982-2020 Innovyze

2 year Return Period Summary of Critical Results by Maximum Level (Rank 1) for Storm

PN	US/MH Name	Level Exceeded
S1.000	S1	1
S2.000	S2	
S1.001	S3	
S1.002	S3A	
S1.003	S4	
S1.004	S-C1	

©1982-2020 Innovyze

30 year Return Period Summary of Critical Results by Maximum Level (Rank 1) for Storm

Simulation Criteria

Areal Reduction Factor 1.000 Additional Flow - % of Total Flow 0.000
Hot Start (mins) 0 MADD Factor * 10m³/ha Storage 2.000
Hot Start Level (mm) 0 Inlet Coeffiecient 0.800
Manhole Headloss Coeff (Global) 0.500 Flow per Person per Day (l/per/day) 0.000
Foul Sewage per hectare (l/s) 0.000

Number of Input Hydrographs 0 Number of Storage Structures 0
Number of Online Controls 1 Number of Time/Area Diagrams 0
Number of Offline Controls 0 Number of Real Time Controls 0

Synthetic Rainfall Details

Rainfall Model FSR Ratio R 0.360
Region England and Wales Cv (Summer) 0.750
M5-60 (mm) 18.000 Cv (Winter) 0.840

Margin for Flood Risk Warning (mm) 300.0
Analysis Timestep 2.5 Second Increment (Extended)
DTS Status OFF
DVD Status ON
Inertia Status ON

Profile(s) Summer and Winter
Duration(s) (mins) 15, 30, 60, 120, 180, 240, 360, 480, 600, 720, 960, 1440
Return Period(s) (years) 2, 30, 100
Climate Change (%) 0, 0, 40

PN	US/MH Name	Storm	Return Period	Climate Change	First (X) Surcharge	First (Y) Flood	First (Z) Overflow	Overflow Act.
S1.000	S1	30 Winter	30	+0%	100/15 Summer	100/60 Winter		
S2.000	S2	30 Winter	30	+0%	100/15 Summer			
S1.001	S3	30 Winter	30	+0%	100/15 Summer			
S1.002	S3A	30 Winter	30	+0%	100/15 Summer			
S1.003	S4	30 Winter	30	+0%	2/15 Winter			
S1.004	S-C1	30 Winter	30	+0%				

PN	US/MH Name	Water Level (m)	Surcharged Depth (m)	Flooded Volume (m³)	Flow / Cap.	Overflow (l/s)	Half Drain Time (mins)	Pipe Flow (l/s)	Status
S1.000	S1	50.020	-0.227	0.000	0.04			6.2	OK
S2.000	S2	50.020	-0.213	0.000	0.05			9.8	OK
S1.001	S3	50.020	-0.198	0.000	0.05			15.5	OK
S1.002	S3A	50.018	-0.112	0.000	0.03			10.2	OK
S1.003	S4	50.013	0.256	0.000	0.16			9.9	SURCHARGED
S1.004	S-C1	49.515	-0.209	0.000	0.20			9.9	OK

©1982-2020 Innovyze

30 year Return Period Summary of Critical Results by Maximum Level (Rank 1) for Storm

PN	US/MH Name	Level Exceeded
S1.000	S1	1
S2.000	S2	
S1.001	S3	
S1.002	S3A	
S1.003	S4	
S1.004	S-C1	

©1982-2020 Innovyze

100 year Return Period Summary of Critical Results by Maximum Level (Rank 1) for Storm

Simulation Criteria

Areal Reduction Factor 1.000 Additional Flow - % of Total Flow 0.000
Hot Start (mins) 0 MADD Factor * 10m³/ha Storage 2.000
Hot Start Level (mm) 0 Inlet Coeffiecient 0.800
Manhole Headloss Coeff (Global) 0.500 Flow per Person per Day (l/per/day) 0.000
Foul Sewage per hectare (l/s) 0.000

Number of Input Hydrographs 0 Number of Storage Structures 0
Number of Online Controls 1 Number of Time/Area Diagrams 0
Number of Offline Controls 0 Number of Real Time Controls 0

Synthetic Rainfall Details

Rainfall Model FSR Ratio R 0.360
Region England and Wales Cv (Summer) 0.750
M5-60 (mm) 18.000 Cv (Winter) 0.840

Margin for Flood Risk Warning (mm) 300.0
Analysis Timestep 2.5 Second Increment (Extended)
DTS Status OFF
DVD Status ON
Inertia Status ON

Profile(s) Summer and Winter
Duration(s) (mins) 15, 30, 60, 120, 180, 240, 360, 480, 600, 720, 960, 1440
Return Period(s) (years) 2, 30, 100
Climate Change (%) 0, 0, 40

PN	US/MH Name	Storm	Return Period	Climate Change	First (X) Surcharge	First (Y) Flood	First (Z) Overflow	Overflow Act.
S1.000	S1	60 Winter	100	+40%	100/15 Summer	100/60 Winter		
S2.000	S2	60 Winter	100	+40%	100/15 Summer			
S1.001	S3	60 Winter	100	+40%	100/15 Summer			
S1.002	S3A	60 Winter	100	+40%	100/15 Summer			
S1.003	S4	60 Winter	100	+40%	2/15 Winter			
S1.004	S-C1	360 Summer	100	+40%				

PN	US/MH Name	Water Level (m)	Surcharged Depth (m)	Flooded Volume (m³)	Flow / Cap.	Overflow (l/s)	Half Drain Time (mins)	Pipe Flow (l/s)	Status
S1.000	S1	51.025	0.778	2.980	0.17			27.1	FLOOD
S2.000	S2	51.049	0.816	0.000	0.06			11.1	SURCHARGED
S1.001	S3	51.046	0.828	0.000	0.07			24.2	SURCHARGED
S1.002	S3A	51.060	0.930	0.000	0.05			16.6	SURCHARGED
S1.003	S4	51.066	1.309	0.000	0.16			9.9	SURCHARGED
S1.004	S-C1	49.516	-0.208	0.000	0.20			9.9	OK

©1982-2020 Innovyze

100 year Return Period Summary of Critical Results by Maximum Level (Rank 1) for Storm

PN	US/MH Name	Level Exceeded
S1.000	S1	1
S2.000	S2	
S1.001	S3	
S1.002	S3A	
S1.003	S4	
S1.004	S-C1	

©1982-2020 Innovyze

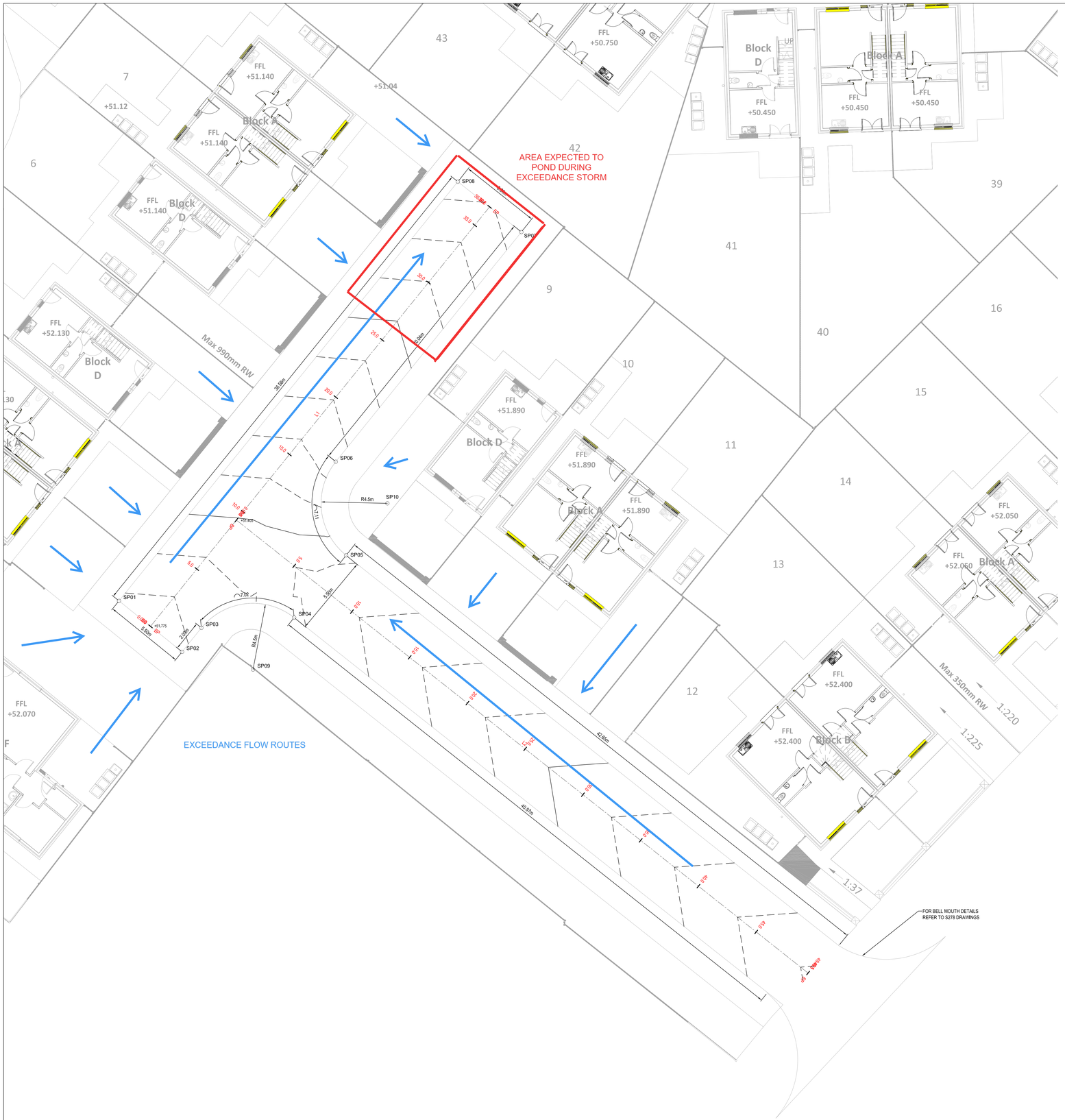

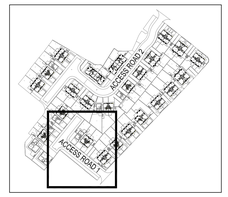

LOCATION PLAN

[SCALE 1:2000]

EXCEEDANCE FLOW ROUTES
SHEET 1

Proposed Surface Water Network
(North)

STORM SEWER DESIGN by the Modified Rational Method

Design Criteria for Storm

Pipe Sizes STANDARD Manhole Sizes STANDARD

FSR Rainfall Model - England and Wales

Return Period (years)	1	PIMP (%)	100
M5-60 (mm)	18.000	Add Flow / Climate Change (%)	0
Ratio R	0.360	Minimum Backdrop Height (m)	0.200
Maximum Rainfall (mm/hr)	50	Maximum Backdrop Height (m)	1.500
Maximum Time of Concentration (mins)	30	Min Design Depth for Optimisation (m)	1.200
Foul Sewage (l/s/ha)	0.000	Min Vel for Auto Design only (m/s)	1.00
Volumetric Runoff Coeff.	0.750	Min Slope for Optimisation (1:X)	500

Designed with Level Soffits

Network Design Table for Storm

PN	Length (m)	Fall (m)	Slope (1:X)	I.Area (ha)	T.E. (mins)	Base Flow (l/s)	k (mm)	HYD SECT	DIA (mm)	Section Type	Auto Design
S1.000	35.219	0.394	89.4	0.046	5.00	0.0	0.600	o	225	Pipe/Conduit	
S1.001	19.852	0.178	111.5	0.061	0.00	0.0	0.600	o	225	Pipe/Conduit	
S1.002	9.865	0.088	112.1	0.026	0.00	0.0	0.600	o	225	Pipe/Conduit	
S1.003	9.000	0.043	209.3	0.042	0.00	0.0	0.600	o	900	Pipe/Conduit	
S1.004	9.000	0.031	290.3	0.000	0.00	0.0	0.600	o	900	Pipe/Conduit	
S1.005	36.000	0.095	378.9	0.039	0.00	0.0	0.600	o	900	Pipe/Conduit	
S1.006	11.601	0.026	446.2	0.142	0.00	0.0	0.600	o	900	Pipe/Conduit	
S1.007	10.396	0.013	799.7	0.000	0.00	0.0	0.600	o	900	Pipe/Conduit	
S1.008	8.991	0.012	749.3	0.187	0.00	0.0	0.600	o	900	Pipe/Conduit	
S1.009	3.417	0.056	61.0	0.009	0.00	0.0	0.600	o	300	Pipe/Conduit	
S1.010	4.992	0.330	15.1	0.000	0.00	0.0	0.600	o	300	Pipe/Conduit	

Network Results Table

PN	Rain (mm/hr)	T.C. (mins)	US/IL (m)	Σ I.Area (ha)	Σ Base Flow (l/s)	Foul (l/s)	Add Flow (l/s)	Vel (m/s)	Cap (l/s)	Flow (l/s)
S1.000	45.20	5.42	49.327	0.046	0.0	0.0	0.0	1.38	55.0	5.6
S1.001	44.26	5.69	48.933	0.107	0.0	0.0	0.0	1.24	49.2	12.8
S1.002	43.81	5.82	47.388	0.133	0.0	0.0	0.0	1.23	49.1	15.8
S1.003	43.57	5.89	45.776	0.175	0.0	0.0	0.0	2.16	1375.4	20.7
S1.004	43.31	5.98	45.733	0.175	0.0	0.0	0.0	1.83	1166.6	20.7
S1.005	42.12	6.35	45.702	0.214	0.0	0.0	0.0	1.60	1020.1	24.4
S1.006	41.72	6.48	45.607	0.356	0.0	0.0	0.0	1.48	939.5	40.2
S1.007	41.26	6.64	45.581	0.356	0.0	0.0	0.0	1.10	699.8	40.2
S1.008	40.87	6.77	45.568	0.543	0.0	0.0	0.0	1.14	723.2	60.1
S1.009	40.79	6.80	45.556	0.552	0.0	0.0	0.0	2.02	142.5	61.0
S1.010	40.74	6.82	44.050	0.552	0.0	0.0	0.0	4.06	287.2	61.0

©1982-2020 Innovyze

Manhole Schedules for Storm

MH Name	MH CL (m)	MH Depth (m)	MH Connection	MH Diam.,L*W (mm)	Pipe Out PN	Pipe Out Invert Level (m)	Pipe Out Diameter (mm)	Pipes In PN	Pipes In Invert Level (m)	Pipes In Diameter (mm)	Backdrop (mm)
S5.3	51.572	2.245	Open Manhole	1200	S1.000	49.327	225				
S5.8	50.658	1.725	Open Manhole	1500	S1.001	48.933	225	S1.000	48.933	225	
S5	50.239	2.851	Open Manhole	1200	S1.002	47.388	225	S1.001	48.755	225	1367
S6	50.068	4.292	Open Manhole	2400	S1.003	45.776	900	S1.002	47.300	225	849
S7	49.912	4.179	Open Manhole	2400	S1.004	45.733	900	S1.003	45.733	900	
S8	49.774	4.072	Open Manhole	2400	S1.005	45.702	900	S1.004	45.702	900	
S9	48.981	3.374	Open Manhole	2400	S1.006	45.607	900	S1.005	45.607	900	
S10	48.612	3.031	Open Manhole	2400	S1.007	45.581	900	S1.006	45.581	900	
S11	47.848	2.280	Open Manhole	2400	S1.008	45.568	900	S1.007	45.568	900	
S12	47.788	2.232	Open Manhole	2400	S1.009	45.556	300	S1.008	45.556	900	
S-C3	47.660	3.610	Open Manhole	1500	S1.010	44.050	300	S1.009	45.500	300	1450
S	47.395	3.675	Open Manhole	0		OUTFALL		S1.010	43.720	300	

MH Name	Manhole Easting (m)	Manhole Northing (m)	Intersection Easting (m)	Intersection Northing (m)	Manhole Access	Layout (North)
S5.3	381011.711	387669.875	381011.711	387669.875	Required	
S5.8	381033.966	387697.173	381033.966	387697.173	Required	
S5	381049.426	387684.718	381049.426	387684.718	Required	
S6	381057.203	387678.650	381057.203	387678.650	Required	
S7	381065.859	387676.184	381065.859	387676.184	Required	
S8	381073.723	387680.560	381073.723	387680.560	Required	
S9	381096.322	387708.583	381096.322	387708.583	Required	
S10	381102.579	387718.352	381102.579	387718.352	Required	

©1982-2020 Innovyze

Manhole Schedules for Storm

MH Name	Manhole Easting (m)	Manhole Northing (m)	Intersection Easting (m)	Intersection Northing (m)	Manhole Access	Layout (North)
S11	381109.599	387726.020	381109.599	387726.020	Required	
S12	381112.078	387734.662	381112.078	387734.662	Required	
S-C3	381113.196	387737.891	381113.196	387737.891	Required	
S	381116.024	387742.005			No Entry	

©1982-2020 Innovyze

PIPELINE SCHEDULES for Storm

Upstream Manhole

PN	Hyd Sect	Diam (mm)	MH Name	C.Level (m)	I.Level (m)	D.Depth (m)	MH Connection	MH DIAM., L*W (mm)
S1.000	o	225	S5.3	51.572	49.327	2.020	Open Manhole	1200
S1.001	o	225	S5.8	50.658	48.933	1.500	Open Manhole	1500
S1.002	o	225	S5	50.239	47.388	2.626	Open Manhole	1200
S1.003	o	900	S6	50.068	45.776	3.392	Open Manhole	2400
S1.004	o	900	S7	49.912	45.733	3.279	Open Manhole	2400
S1.005	o	900	S8	49.774	45.702	3.172	Open Manhole	2400
S1.006	o	900	S9	48.981	45.607	2.474	Open Manhole	2400
S1.007	o	900	S10	48.612	45.581	2.131	Open Manhole	2400
S1.008	o	900	S11	47.848	45.568	1.380	Open Manhole	2400
S1.009	o	300	S12	47.788	45.556	1.932	Open Manhole	2400
S1.010	o	300	S-C3	47.660	44.050	3.310	Open Manhole	1500

Downstream Manhole

PN	Length (m)	Slope (1:X)	MH Name	C.Level (m)	I.Level (m)	D.Depth (m)	MH Connection	MH DIAM., L*W (mm)
S1.000	35.219	89.4	S5.8	50.658	48.933	1.500	Open Manhole	1500
S1.001	19.852	111.5	S5	50.239	48.755	1.259	Open Manhole	1200
S1.002	9.865	112.1	S6	50.068	47.300	2.543	Open Manhole	2400
S1.003	9.000	209.3	S7	49.912	45.733	3.279	Open Manhole	2400
S1.004	9.000	290.3	S8	49.774	45.702	3.172	Open Manhole	2400
S1.005	36.000	378.9	S9	48.981	45.607	2.474	Open Manhole	2400
S1.006	11.601	446.2	S10	48.612	45.581	2.131	Open Manhole	2400
S1.007	10.396	799.7	S11	47.848	45.568	1.380	Open Manhole	2400
S1.008	8.991	749.3	S12	47.788	45.556	1.332	Open Manhole	2400
S1.009	3.417	61.0	S-C3	47.660	45.500	1.860	Open Manhole	1500
S1.010	4.992	15.1	S	47.395	43.720	3.375	Open Manhole	0

Free Flowing Outfall Details for Storm

Outfall Pipe Number	Outfall Name	C. Level (m)	I. Level (m)	Min I. Level (m)	D,L (mm)	W (mm)
S1.010	S	47.395	43.720	0.000	0	0

©1982-2020 Innovyze

Simulation Criteria for Storm

Volumetric Runoff Coeff	0.750	Additional Flow - % of Total Flow	0.000
Areal Reduction Factor	1.000	MADD Factor * 10m³/ha Storage	2.000
Hot Start (mins)	0	Inlet Coeffiecient	0.800
Hot Start Level (mm)	0	Flow per Person per Day (l/per/day)	0.000
Manhole Headloss Coeff (Global)	0.500	Run Time (mins)	60
Foul Sewage per hectare (l/s)	0.000	Output Interval (mins)	1

Number of Input Hydrographs	0	Number of Storage Structures	0
Number of Online Controls	1	Number of Time/Area Diagrams	0
Number of Offline Controls	0	Number of Real Time Controls	0

Synthetic Rainfall Details

Rainfall Model	FSR	Profile Type	Summer
Return Period (years)	100	Cv (Summer)	0.750
Region	England and Wales	Cv (Winter)	0.840
M5-60 (mm)	18.000	Storm Duration (mins)	30
Ratio R	0.360		

©1982-2020 Innovyze

Online Controls for Storm

Hydro-Brake® Optimum Manhole: S12, DS/PN: S1.009, Volume (m³): 14.3

Unit Reference	MD-SHE-0220-3000-2200-3000
Design Head (m)	2.200
Design Flow (l/s)	30.0
Flush-Flo™	Calculated
Objective	Minimise upstream storage
Application	Surface
Sump Available	Yes
Diameter (mm)	220
Invert Level (m)	45.556
Minimum Outlet Pipe Diameter (mm)	300
Suggested Manhole Diameter (mm)	1800

Control Points	Head (m)	Flow (l/s)
Design Point (Calculated)	2.200	30.0
Flush-Flo™	0.635	30.0
Kick-Flo®	1.365	23.9
Mean Flow over Head Range	-	26.1

The hydrological calculations have been based on the Head/Discharge relationship for the Hydro-Brake® Optimum as specified. Should another type of control device other than a Hydro-Brake Optimum® be utilised then these storage routing calculations will be invalidated

Depth (m)	Flow (l/s)	Depth (m)	Flow (l/s)	Depth (m)	Flow (l/s)	Depth (m)	Flow (l/s)
0.100	7.4	1.200	27.0	3.000	34.8	7.000	52.4
0.200	21.6	1.400	24.2	3.500	37.5	7.500	54.2
0.300	27.3	1.600	25.8	4.000	40.0	8.000	55.9
0.400	28.9	1.800	27.3	4.500	42.3	8.500	57.6
0.500	29.7	2.000	28.7	5.000	44.5	9.000	59.2
0.600	30.0	2.200	30.0	5.500	46.6	9.500	60.8
0.800	29.7	2.400	31.3	6.000	48.6		
1.000	28.8	2.600	32.5	6.500	50.6		

©1982-2020 Innovyze