ENGINEERING
TOMORROW

European Catalogue

Optyma™
Packaged condensing units

R452A, R134a, R513A, R448A, R449A, R407A, R407F, R404A/R507 - 50 Hz

www.danforss.com | EcoDesign 2018 | Optyma™ by Danfoss

Danfoss Optyma™ packaged condensing units 4

Optyma™ Slim Pack 6
Performance data 7
R452A LBP 7
R404A/R507 LBP 9
R134a MBP 11
R513A MBP 13
R448A MBP 15
R449A MBP 17
R452A MBP 19
R404A/R507 MBP 21
Technical data 24
Spare parts & accessories - LBP 25
Spare parts & accessories - MBP 27
Spare parts & accessories list 30
Dimensions 33
Housing spare parts 34
Electrical wiring diagrams 35

Optyma™ Plus 40
Performance data 41
R452A LBP 41
R404A/R507 LBP 43
R404A/R507 LBP 44
R448A/R449A LBP 45
R134a MBP 46
R513A MBP 48
R448A MBP 50
R449A MBP 51
R452A MBP 54
R404A/R507 MBP 56
Technical data 59
Spare parts & accessories - LBP 60
Spare parts & accessories - MBP 63
Spare parts & accessories list 66
Dimensions 69
Housing spare parts 71
Electrical wiring diagrams 72

Optyma™ Plus INVERTER 76
Performance data 77
R448A/R449A MBP 77
R404A MBP 78
Technical data 79
Spare parts & accessories - MBP 79
Spare parts & accessories list 80
Housing spare parts 81
Dimensions 81
Electrical wiring diagrams 82

Danfoss Optyma™
packaged condensing units

Highly efficient and reliable plug and play condensing units designed with the contractor and end-user in mind, and providing unique benefits.

Benefits for the contractor

- Simple and fast selection and installation, reduced maintenance time
- Models compatible with multiple lower GWP refrigerants
- Reduced refrigerant costs thanks to microchannel condenser inside

Benefits for the end-user

- Higher food safety and longer products shelf life
- Units suitable for residential areas thanks to low sound level operation
- Reduced life cycle costs of refrigeration equipment thanks to highly efficient units

Optyma™ **Slim Pack W05**

Compact and cost effective. When space, quiet operation, efficiency and simple installation matter.
With microchannel condenser

Optyma™ **Plus (P00)**

Top performer. When quietness, high efficiency, connectivity and fastest installation and maintenance matter.
With electronic controller

Optyma™ **with Liquid Injection (P02)**

P00 base + Liquid injection feature with electronic expansion valve and dedicated electronic controller.

Optyma™ **Plus INVERTER (P01)**

Premium unit. When top efficiency, fastest installation and maintenance, tight temperature and humidity control matter.
With variable speed drive

MBP and LBP **applications**

- Cold rooms, display cabinets in convenience stores, mini-markets, restaurants, fisheries, butcheries, bakeries, florists, laboratories
- Wine cellars
- Milk cooling
- Industrial processes
- Dairy and general food storage

Designation

OP - MSXM034 ML W05 G

1 2 3 4 5 6 7 8

OP = Optyma

1	Application: **M** = MBP ; **L** = LBP
2	Condensing unit family: **S** = Slim Pack / **P** = OP Plus and OP Plus INVERTER
3	Refrigerant: **H** = R404A/R507 ; **G** = R134a, R513A ; **Q** = R452A, R404A/R507 **X** = R404A/R507, R134a, R407A, R407F, R448A, R513A, R449A,R452A ; **Y** = R404A/R507, R449A; **B** = R404A/R507, R449A, R452A; **P** = R448A/R449A, R407A/F, R404A/R507, **O** = R452A, R404A/R507, R448A, R449A
4	**M** = Microchannel heat condenser
5	Displacement in cm^3. Example 034 = 34 cm^3
6	Compressor platform (such as VVL = variable speed scroll VLZ)
7	Version: **W05:** Optyma™ **Slim Pack** **P00**: Optyma™ **Plus** **P01**: Optyma™ **Plus INVERTER** **P02:** Optyma™ **Plus** with Liquid Injection
8	Electrical code: **G** = 230V/1-phase compressor & fan **E** = 400V/3-phase compressor & 230V/1-phase fan

Feature overview:

	Optyma™ **Slim Pack**	Optyma™ **Plus**		Optyma™ **Plus INVERTER**
	W05	**(P00)**	**(P02)**	
IP level	IP54	IP54		IP54
Compressor technology	Scroll/Reciprocating	Scroll/Reciprocating	Scroll	Variable speed scroll
Control box (pre-wired E-panel)	yes	yes		yes
Microchannel condenser	yes	yes		yes
Fan speed controller	-	yes		yes
Main switch (circuit breaker)	-	yes		yes
Filter drier (flare connections)	yes	yes		yes
Sight glass	yes	yes		yes
Crankcase heater	yes	yes		yes
HP/LP adjustable pressostat	Auto/Manual reset mode	Electronic		Electronic
Fail safe mini-pressostat	-	Mechanical		Mechanical
Access door(s)	-	yes		yes
Acoustic insulation	-	yes		yes
Condensing unit electronic controller	-	yes		yes
Network connectivity	-	yes		yes
Stack mounting	-	yes		-
Oil separator	-	-		yes
Discharge gas thermostat	yes*	yes		yes
HP/LP Alarm	yes*	yes		yes
Liquid injection kit	-	-	yes	-
Net weight in kg	B1 housing: from 50.4 to 53 B2 housing: from 61.5 to 77 B3 housing: from 76 to 79	H1 housing: from 49 to 53 H2 housing: from 80 to 94 H3 housing: from 101 to 107 H4 housing: 169	H3 housing: from 135 and 136 H4 housing: 161 and 166	124 & 125
Dimensions in mm (height x width x depth)	B1 housing: 530 x 910 x 364 B2 housing: 690 x 1079 X464 B3 housing: 825 x 1105 x 464	H1 housing: 605 X 941 X 406 H2 housing: 813 X 1090 X 480 H3 housing: 965 X 1441 X 531 H4 housing: 966 X 1835 X 650	H3 housing: 965 X 1441 X 531 H4 housing: 966 X 1835 X 650	965 x 1406 x 481

* Not premounted, provision available

Overview by range and refrigerant:

Min / Max Cooling capacity range [kW]	Optyma™ **Slim Pack**	Optyma™ **Plus**	Optyma™ **Plus INVERTER**	Optyma™ **with Liquid injection (P02)**
Medium temperature (MBP)				
R449A	0.8 - 10.2	0.7 - 14.9	1.7 - 8.3	-
R448A	3.3 - 10.2	3.3 - 14.9	1.7 - 8.3	-
R134a	0.6 - 6.6	1.7 - 10.2	-	-
R513A	0.62 - 7.0	1.7 - 10.3	-	-
R407A	3.3 - 9.9	3.3 - 14.6	1.7 - 8.4	-
R407F	3.5 - 10.2	3.5 - 15.5	1.8 - 9	-
R452A	1.5 - 10.8	1.5 - 16.2	-	-
R404A/507	0.9 - 10.3	0.7 - 16	1.8 - 9	-
Low temperature (LBP)				
R448A/R448A	-	-	-	2.3 - 6.0
R452A	0.4 - 3.3	0.4 - 6.1	-	0.4 - 6.1
R404A/507	0.4 - 3.6	0.5 - 6.2	-	0.5 - 6.2

Rating conditions EN 13215 (dew point):
MBP: Ambient temp = 32°C, Evap temp = -10°C, Superheat = 10K, Subcooling = 0K / **LBP:** Ambient temp = 32°C, Evap temp = -35°C, Superheat = 10K, Subcooling = 0K

Optyma™ Slim Pack
Light on **refrigerant, heavy on efficiency**

2.9 kg
Less refrigerant on bigger sizes for more savings

Get it all with Optyma™ **Slim Pack**. It combines quiet operation and more value for money with an energy-efficient and compact solution.

Quick and safe installation and service

Enjoy fast and easy installation with the main switch, service valves, and quick connections. Additionally, the easy-to-clean MCHE saves you time and effort on servicing.

High SEPR*

All models in the range are highly efficient and well above EcoDesign 2018 thresholds, contributing to a reduction in energy costs.
**SEPR: Seasonal Energy Performance Ratio.*

Optimized footprint for floor and wall mounting

Thanks to its slim design and low weight, it is easy to transport and handle during installation – particularly for wall mounting.

Standard range **(W05)**

High SEPR/COP **cuts energy costs**

E.g. in a cold room where fruit & vegetables are stored and with 2.7 kW of cooling capacity.

Optyma™ Slim Pack MBP unit vs equivalent unit in the market*

Cooling cap.: 2.7 kW
Refrigerant: R134a

UNIT	Danfoss	Market
COP	2.18	1.70
USAGE	~ 8 245 kWh	~ 10 636 kWh

Annual energy consumption saved: 2 391 kWh

Savings based on cost of energy:

Savings based on cost of energy in the UK:
£0.13 / 1 KWH = 2 391 X 0.13 = £311

£311 annual electricity savings made by your customer in UK

* Source: Danfoss

Model	Code	Version	Compressor	Electrical code (1)	Tamb [°C]	Cooling capacity Q [kW] (2) Te [°C] -40°C	-35°C	-30°C	-25°C	-20°C	-15°C	-10°C	EcoDesign (3) Q [kW]	P [kW]	COP	SEPR	Sound power level dB(A)	Sound pressure level @ 10m dB(A)
OP-LSQM014MP	114X7106	W05	MPT14LA	G	27	-	0.421	0.535	0.656	0.784	0.919	1.060						
					32	-	0.379	0.481	0.592	0.710	0.835	0.966	0.422	0.441	0.96		63	32
					38	-	0.328	0.418	0.515	0.621	0.734	0.854						
					43	-	0.285	0.365	0.452	0.548	0.651	0.761						
OP-LSQM018MP	114X7107	W05	MPT16LA	G	27	-	0.443	0.583	0.735	0.897	1.070	1.253						
					32	-	0.396	0.522	0.661	0.810	0.971	1.142	0.441	0.465	0.95		63	32
					38	-	0.340	0.450	0.572	0.707	0.853	1.009						
					43	-	0.293	0.390	0.499	0.621	0.754	0.899						
OP-LSQM026AJ	114X7085	W05	CAJ2446Z	G	27	0.472	0.659	0.881	1.144	1.447	1.794	2.184						
					32	0.408	0.581	0.788	1.031	1.312	1.634	1.997	0.644	0.671	0.96		67	36
					38	-	0.489	0.675	0.894	1.148	1.439	1.769						
					43	-	0.414	0.582	0.780	1.010	1.275	1.577						
OP-LSQM034AJ	114X7086	W05	CAJ2464Z	G	27	0.628	0.859	1.139	1.473	1.864	2.316	2.830						
					32	0.549	0.763	1.022	1.332	1.695	2.115	2.594	0.846	0.892	0.95		68	37
					38	-	0.649	0.882	1.161	1.489	1.870	2.307						
					43	-	0.556	0.767	1.019	1.318	1.666	2.067						
OP-LSQM048NT	114X7087	W05	NTZ048-5	G	27	0.771	1.090	1.478	1.931	2.446	3.018	3.641						
					32	0.655	0.948	1.303	1.718	2.191	2.717	3.291	1.053	0.950	1.11		71	40
					38	0.529	0.790	1.105	1.475	1.896	2.366	2.880						
					43	0.433	0.667	0.950	1.281	1.660	2.082	2.545						
OP-LSQM048NT	114X7088	W05	NTZ048-4	E	27	0.778	1.076	1.438	1.860	2.340	2.873	3.454						
					32	0.679	0.947	1.273	1.655	2.092	2.579	3.112	1.054	0.981	1.07		71	40
					38	0.572	0.805	1.089	1.424	1.809	2.241	2.716						
					43	0.491	0.695	0.945	1.242	1.584	1.969	2.396						
OP-LSQM074FH	114X7095	W05	FH2511Z	G	27	1.062	1.511	2.037	2.641	3.324	4.085	4.919						
					32	0.889	1.310	1.801	2.365	3.003	3.713	4.492	1.458	1.539	0.95		75	44
					38	-	1.070	1.518	2.033	2.614	3.262	3.975						
					43	-	0.874	1.286	1.757	2.290	2.886	3.542						

LBP

This table continues on the next page

(1) G - Compressor 230V/1~/50Hz, fan 230V/1~/50Hz
E - Compressor 400V/3~/50Hz, fan 230V/1~/50Hz
(2) Nominal conditions (EN13215), Evaporating temperatures at dew point, Superheat 10K, Subcooling 0K
(3) Rated conditions (EN13215), Evaporating temperature (dew point) -35°C, Ambient air temperature +32°C, Return Gas Temperature 20°C, Subcooling 0K
SEPR, Seasonal Energy Performance Ratio
Q [kW], Cooling Capacity
P [kW], Power Input

For regular updates and detailed capacities, please refer to **Coolselector®2** software

Model	Code	Version	Compressor	Electrical code (1)	Tamb [°C]	Cooling capacity Q [kW] (2) Te [°C] -40°C	-35°C	-30°C	-25°C	-20°C	-15°C	-10°C	EcoDesign (3) Q [kW]	P [kW]	COP	SEPR	Sound power level dB(A)	Sound pressure level @ 10m dB(A)
OP-LSQM074FH	114X7096	W05	TFH2511Z	E	27	1.001	1.415	1.897	2.442	3.044	3.695	4.384						
					32	0.841	1.221	1.664	2.166	2.722	3.324	3.964	1.362	1.390	0.98		75	44
					38	-	1.003	1.398	1.848	2.347	2.890	3.467						
					43	-	0.835	1.190	1.595	2.045	2.536	3.059						
OP-LSQM068NT	114X7090	W05	NTZ068-4	E	27	1.215	1.655	2.158	2.712	3.299	3.898	4.484						
					32	1.056	1.459	1.918	2.421	2.952	3.491	4.014	1.632	1.404	1.16		71	40
					38	0.864	1.223	1.629	2.070	2.534	3.000	3.446						
					43	0.708	1.028	1.388	1.778	2.184	2.588	2.969						
OP-LSQM068NT	114X7089	W05	NTZ068-5	G	27	1.241	1.667	2.151	2.688	3.273	3.897	4.550						
					32	1.052	1.447	1.895	2.392	2.932	3.508	4.110	1.619	1.627	1.00		71	40
					38	0.833	1.192	1.597	2.045	2.530	3.047	3.586						
					43	0.659	0.987	1.355	1.762	2.201	2.668	3.153						
OP-LSQM067LL	114X7091	W05	LLZ013T4	E	27	1.925	2.483	3.161	3.970	4.918	6.013	7.257						
					32	1.794	2.306	2.929	3.675	4.553	5.571	6.733	2.570	2.177	1.18	1.62	71	40
					38	1.642	2.096	2.651	3.318	4.108	5.030	6.089						
					43	1.519	1.922	2.418	3.017	3.731	4.570	5.541						
OP-LSQM084LL	114X7092	W05	LLZ015T4	E	27	2.408	3.051	3.812	4.703	5.732	6.905	8.225						
					32	2.223	2.820	3.526	4.351	5.306	6.398	7.630	3.152	2.706	1.16	1.60	73	42
					38	1.997	2.533	3.167	3.909	4.771	5.761	6.884						
					43	1.803	2.286	2.856	3.526	4.306	5.206	6.234						
OP-LSQM098LL	114X7075	W05	LLZ018T4	E	27	2.812	3.560	4.438	5.457	6.622	7.938	9.406						
					32	2.592	3.286	4.098	5.039	6.118	7.339	8.704	3.683	3.166	1.16	1.61	74	43
					38	2.318	2.943	3.671	4.516	5.486	6.588	7.824						
					43	2.084	2.647	3.302	4.062	4.937	5.935	7.061						

LBP
(1) G - Compressor 230V/1~/50Hz, fan 230V/1~/50Hz
E - Compressor 400V/3~/50Hz, fan 230V/1~/50Hz
(2) Nominal conditions (EN13215), Evaporating temperatures at dew point, Superheat 10K, Subcooling 0K
(3) Rated conditions (EN13215), Evaporating temperature (dew point) -35°C, Ambient air temperature +32°C, Return Gas Temperature 20°C, Subcooling 0K
SEPR, Seasonal Energy Performance Ratio
Q [kW], Cooling Capacity
P [kW], Power Input

For regular updates and detailed capacities, please refer to **Coolselector®2** software

Model	Code	Version	Compressor	Electrical code (1)	Tamb [°C]	Cooling capacity Q [kW] (2) Te [°C] -40°C	-35°C	-30°C	-25°C	-20°C	-15°C	-10°C	EcoDesign (3) Q [kW]	P [kW]	COP	SEPR	Sound power level dB(A)	Sound pressure level @ 10m dB(A)
OP-LSQM014MP	114X7106	W05	MPT14LA	G	27	0.364	0.494	0.640	0.802	0.979	1.171	1.379						
					32	0.327	0.444	0.577	0.725	0.889	1.068	1.264	0.500	1.030	0.49		60	29
					38	0.283	0.384	0.501	0.633	0.781	0.945	1.126						
					43	0.247	0.335	0.439	0.557	0.692	0.843	1.011						
OP-LSQM018MP	114X7107	W05	MPT16LA	G	27	0.380	0.535	0.710	0.903	1.115	1.345	1.594						
					32	0.340	0.480	0.638	0.816	1.013	1.228	1.463	0.540	1.070	0.50		60	29
					38	0.293	0.413	0.553	0.712	0.890	1.088	1.305						
					43	0.253	0.359	0.483	0.626	0.789	0.971	1.173						
OP-LSQM026AJ	114X7085	W05	CAJ2446Z	G	27	0.526	0.732	0.978	1.268	1.606	1.993	2.432						
					32	0.455	0.645	0.872	1.140	1.451	1.809	2.216	0.724	1.010	0.72		67	36
					38	0.371	0.541	0.745	0.985	1.265	1.588	1.957						
					43	-	0.457	0.641	0.857	1.111	1.404	1.739						
OP-LSQM034AJ	114X7086	W05	CAJ2464Z	G	27	0.685	0.933	1.232	1.586	2.000	2.476	3.015						
					32	0.599	0.826	1.101	1.428	1.809	2.249	2.749	0.930	0.980	0.95		68	37
					38	0.497	0.701	0.946	1.238	1.580	1.976	2.429						
					43	-	0.598	0.819	1.082	1.391	1.750	2.163						
OP-LSQM048NT	114X7087	W05	NTZ048-5	G	27	0.776	1.134	1.568	2.083	2.677	3.349	4.098						
					32	0.651	0.981	1.381	1.853	2.398	3.017	3.706	1.104	1.010	1.01		71	40
					38	0.501	0.798	1.155	1.576	2.062	2.615	3.232						
					43	0.381	0.647	0.968	1.345	1.782	2.279	2.836						
OP-LSQM048NT	114X7088	W05	NTZ048-4	E	27	0.783	1.143	1.572	2.072	2.645	3.290	4.007						
					32	0.670	1.000	1.392	1.849	2.371	2.960	3.615	1.126	1.130	0.10		71	40
					38	0.536	0.831	1.179	1.583	2.044	2.565	3.147						
					43	0.427	0.692	1.003	1.363	1.775	2.240	2.760						

LBP

This table continues on the next page

(1) G - Compressor 230V/1~/50Hz, fan 230V/1~/50Hz
E - Compressor 400V/3~/50Hz, fan 230V/1~/50Hz
(2) Nominal conditions (EN13215), Evaporating temperatures at dew point, Superheat 10K, Subcooling 0K
(3) Rated conditions (EN13215), Evaporating temperature (dew point) -35°C, Ambient air temperature +32°C, Return Gas Temperature 20°C, Subcooling 0K

SEPR, Seasonal Energy Performance Ratio
Q [kW], Cooling Capacity
P [kW], Power Input

For regular updates and detailed capacities, please refer to **Coolselector®2** software

Optyma™ Slim Pack - Performance data R404A/R507 LBP

Model	Code	Version	Compressor	Electrical code (1)	Tamb [°C]	Cooling capacity Q [kW] (2) Te [°C] -40°C	-35°C	-30°C	-25°C	-20°C	-15°C	-10°C	EcoDesign (3) Q [kW]	P [kW]	COP	SEPR	Sound power level dB(A)	Sound pressure level @ 10m dB(A)
OP-LSQM074FH	114X7096	W05	TFH2511Z	E	27	1.176	1.664	2.235	2.890	3.630	4.455	5.361						
					32	0.983	1.439	1.971	2.580	3.268	4.034	4.877	1.627	0.980	1.66		75	44
					38	0.756	1.172	1.655	2.207	2.831	3.526	4.292						
					43	0.573	0.955	1.395	1.899	2.468	3.102	3.803						
OP-LSQM074FH	114X7095	W05	FH2511Z	G	27	1.177	1.670	2.254	2.931	3.695	4.543	5.468						
					32	0.985	1.434	1.969	2.588	3.291	4.074	4.931	1.620	1.070	1.51		75	44
					38	0.776	1.173	1.646	2.197	2.825	3.528	4.301						
					43	0.620	0.972	1.394	1.887	2.452	3.087	3.789						
OP-LSQM068NT	114X7089	W05	NTZ068-5	G	27	1.359	1.860	2.443	3.107	3.852	4.672	5.563						
					32	1.172	1.629	2.162	2.770	3.451	4.204	5.024	1.845	1.140	1.61		71	40
					38	0.967	1.374	1.846	2.386	2.991	3.662	4.394						
					43	0.812	1.177	1.599	2.081	2.623	3.225	3.883						
OP-LSQM068NT	114X7090	W05	NTZ068-4	E	27	1.332	1.793	2.348	2.994	3.730	4.548	5.440	1.826	1.060	1.73			
					32	1.189	1.608	2.110	2.694	3.358	4.098	4.905					71	40
					38	1.017	1.388	1.828	2.338	2.918	3.564	4.270						
					43	0.873	1.205	1.594	2.044	2.554	3.123	3.745						
OP-LSQM067LL	114X7091	W05	LLZ013T4	E	27	2.210	2.823	3.547	4.391	5.365	6.476	7.732						
					32	2.024	2.600	3.276	4.061	4.965	5.997	7.163	2.942	1.190	2.48	1.65	71	40
					38	1.790	2.319	2.934	3.645	4.462	5.395	6.451						
					43	1.586	2.073	2.634	3.280	4.022	4.870	5.832						
OP-LSQM084LL	114X7092	W05	LLZ015T4	E	27	2.408	3.051	3.812	4.703	5.732	6.905	8.225						
					32	2.223	2.820	3.526	4.351	5.306	6.398	7.630	3.528	1.210	2.91	1.68	73	42
					38	1.997	2.533	3.167	3.909	4.771	5.761	6.884						
					43	1.803	2.286	2.856	3.526	4.306	5.206	6.234						
OP-LSQM098LL	114X7075	W05	LLZ018T4	E	27	3.089	3.920	4.914	6.079	7.421	8.944	10.647						
					32	2.837	3.608	4.524	5.594	6.825	8.221	9.785	4.103	1.240	3.30	1.72	74	43
					38	2.519	3.216	4.035	4.987	6.082	7.324	8.719						
					43	2.241	2.871	3.607	4.459	5.438	6.550	7.802						

LBP

(1) G - Compressor 230V/1~/50Hz, fan 230V/1~/50Hz
E - Compressor 400V/3~/50Hz, fan 230V/1~/50Hz

(2) Nominal conditions (EN13215), Evaporating temperatures at dew point, Superheat 10K, Subcooling 0K

(3) Rated conditions (EN13215), Evaporating temperature (dew point) -35°C, Ambient air temperature +32°C, Return Gas Temperature 20°C, Subcooling 0K

SEPR, Seasonal Energy Performance Ratio
Q [kW], Cooling Capacity
P [kW], Power Input

For regular updates and detailed capacities, please refer to **Coolselector®2** software

Model	Code	Version	Compressor	Electrical code (1)	Tamb [°C]	Cooling capacity Q [kW] (2) Te [°C] -15°C	-10°C	-5°C	0°C	5°C	10°C	15°C	EcoDesign (3) Q [kW]	P [kW]	COP	SEPR	Sound power level dB(A)	Sound pressure level @ 10m dB(A)
OP-MSGM012SC	114X7099	W05	SC12G	G	27	0.549	0.693	0.861	1.055	1.277	1.528	1.810						
					32	0.503	0.640	0.800	0.987	1.200	1.442	1.714	0.655	0.382	1.71		62	31
					38	0.446	0.575	0.726	0.902	1.105	1.336	1.596						
					43	0.400	0.521	0.664	0.832	1.025	1.246	1.497						
OP-MSGM015SC	114X7100	W05	SC15G	G	27	0.591	0.756	0.951	1.177	1.435	1.725	2.047						
					32	0.562	0.719	0.903	1.115	1.357	1.628	1.930	0.737	0.448	1.64		63	32
					38	0.517	0.666	0.838	1.034	1.256	1.506	1.782						
					43	0.474	0.616	0.778	0.961	1.168	1.399	1.656						
OP-MSGM018SC	114X7101	W05	SC18G	G	27	0.757	0.937	1.144	1.381	1.651	1.954	2.293						
					32	0.680	0.855	1.057	1.289	1.552	1.849	2.180	0.876	0.544	1.61		63	32
					38	0.606	0.774	0.968	1.191	1.444	1.729	2.049						
					43	0.556	0.716	0.902	1.114	1.357	1.631	1.938						
OP-MSGM021SC	114X7102	W05	SC21G	G	27	0.885	1.107	1.358	1.638	1.949	2.290	2.662						
					32	0.813	1.025	1.267	1.538	1.839	2.170	2.531	1.051	0.605	1.74		63	32
					38	0.733	0.932	1.159	1.416	1.702	2.018	2.364						
					43	0.666	0.852	1.066	1.308	1.580	1.881	2.213						
OP-MSGM026AJ	114X7103	W05	CAJ4492Y	G	27	1.075	1.396	1.773	2.209	2.708	3.270	3.896						
					32	0.982	1.284	1.638	2.048	2.516	3.045	3.636	1.314	0.729	1.80		62	31
					38	0.867	1.149	1.477	1.856	2.289	2.779	3.328						
					43	0.769	1.035	1.342	1.696	2.101	2.559	3.074						
OP-MSGM033AJ	114X7104	W05	CAJ4511Y	G	27	1.404	1.795	2.247	2.762	3.342	3.987	4.693						
					32	1.294	1.663	2.090	2.575	3.121	3.729	4.396	1.704	0.845	2.02		67	36
					38	1.157	1.502	1.897	2.347	2.852	3.416	4.037						
					43	1.041	1.365	1.735	2.154	2.626	3.153	3.735						
OP-MSXM034ML	114X7062	W05	MLZ015T4	E	27	1.817	2.286	2.834	3.467	4.188	5.001	5.907						
					32	1.716	2.162	2.685	3.290	3.980	4.761	5.632	2.216	0.983	2.25		69	38
					38	1.597	2.012	2.502	3.071	3.723	4.462	5.290						
					43	1.499	1.886	2.346	2.883	3.502	4.205	4.995						
OP-MSXM034ML	114X7061	W05	MLZ015T5	G	27	1.822	2.321	2.883	3.513	4.218	5.003	5.876						
					32	1.711	2.189	2.730	3.339	4.023	4.788	5.639	2.244	1.033	2.17		69	38
					38	1.580	2.026	2.536	3.115	3.770	4.504	5.324						
					43	1.476	1.890	2.369	2.919	3.544	4.250	5.041						
OP-MSXM044ML	114X7162	W05	MLZ019T4	E	27	2.323	2.897	3.577	4.365	5.259	6.259	7.360						
					32	2.193	2.739	3.386	4.137	4.990	5.944	6.997	2.811	1.258	2.23		69	38
					38	2.032	2.543	3.149	3.853	4.655	5.554	6.548						
					43	1.896	2.375	2.945	3.610	4.368	5.220	6.164						
OP-MSXM044ML	114X7211	W05	MLZ019T5	G	27	2.312	2.920	3.612	4.394	5.268	6.238	7.307						
					32	2.173	2.748	3.411	4.163	5.007	5.947	6.985	2.821	1.401	2.01		69	38
					38	2.009	2.539	3.157	3.867	4.670	5.568	6.564						
					43	1.881	2.364	2.940	3.609	4.373	5.232	6.189						
OP-MSXM046ML	114X7064	W05	MLZ021T4	E	27	2.478	3.090	3.817	4.660	5.618	6.691	7.875						
					32	2.339	2.922	3.614	4.418	5.333	6.358	7.490	2.998	1.289	2.33		69	38
					38	2.167	2.713	3.363	4.118	4.979	5.945	7.014						
					43	2.021	2.535	3.147	3.860	4.674	5.591	6.606						

MBP

This table continues on the next page

(1) G - Compressor 230V/1~/50Hz, fan 230V/1~/50Hz
E - Compressor 400V/3~/50Hz, fan 230V/1~/50Hz
(2) Nominal conditions (EN13215), Evaporating temperatures at dew point, Superheat 10K, Subcooling 0K
(3) Rated conditions (EN13215), Evaporating temperature (dew point) -10°C, Ambient air temperature +32°C, Return Gas Temperature 20°C, Subcooling 0K

SEPR, Seasonal Energy Performance Ratio
Q [kW], Cooling Capacity
P [kW], Power Input

For regular updates and detailed capacities, please refer to **Coolselector®2** software

Optyma™ Slim Pack - Performance data R134a MBP

Model	Code	Version	Compressor	Electrical code (1)	Tamb [°C]	Cooling capacity Q [kW] (2) Te [°C] -15°C	-10°C	-5°C	0°C	5°C	10°C	15°C	EcoDesign (3) Q [kW]	P [kW]	COP	SEPR	Sound power level dB(A)	Sound pressure level @ 10m dB(A)
OP-MSXM046ML	114X7063	W05	MLZ021T5	G	27	2.465	3.114	3.854	4.690	5.626	6.665	7.811						
					32	2.317	2.933	3.641	4.446	5.350	6.358	7.473	3.010	1.451	2.07		69	38
					38	2.143	2.710	3.372	4.133	4.994	5.959	7.030						
					43	2.006	2.524	3.142	3.859	4.679	5.603	6.633						
OP-MSXM057ML	114X7066	W05	MLZ026T4	E	27	2.988	3.749	4.629	5.632	6.762	8.020	9.405						
					32	2.811	3.536	4.375	5.331	6.409	7.610	8.932	3.633	1.591	2.28		69	38
					38	2.596	3.276	4.062	4.959	5.972	7.101	8.346						
					43	2.416	3.055	3.795	4.641	5.596	6.664	7.843						
OP-MSXM057ML	114X7065	W05	MLZ026T5	G	27	2.981	3.762	4.649	5.647	6.760	7.991	9.345						
					32	2.805	3.540	4.384	5.339	6.409	7.597	8.905	3.639	1.914	1.90		69	38
					38	2.601	3.271	4.052	4.947	5.958	7.088	8.337						
					43	2.443	3.048	3.770	4.608	5.564	6.638	7.833						
OP-MSXM068ML	114X7068	W05	MLZ030T4	E	27	3.686	4.631	5.738	7.016	8.470	10.104	11.920						
					32	3.484	4.382	5.437	6.657	8.048	9.614	11.357	4.493	1.897	2.37		70	39
					38	3.240	4.078	5.066	6.213	7.524	9.005	10.657						
					43	3.037	3.820	4.748	5.831	7.073	8.480	10.053						
OP-MSXM068ML	114X7067	W05	MLZ030T5	G	27	3.786	4.657	5.752	7.035	8.471	10.032	11.692						
					32	3.642	4.426	5.449	6.672	8.059	9.581	11.211	4.540	2.184	2.08		70	39
					38	3.479	4.146	5.072	6.214	7.534	9.001	10.586						
					43	3.356	3.915	4.751	5.817	7.073	8.487	10.029						
OP-MSXM080ML	114X7070	W05	MLZ038T4	E	27	4.283	5.388	6.667	8.129	9.782	11.630	13.673						
					32	4.029	5.086	6.307	7.704	9.282	11.048	13.001	5.220	2.308	2.26	3.43	70	39
					38	3.718	4.713	5.863	7.176	8.663	10.326	12.170						
					43	3.454	4.396	5.482	6.724	8.130	9.707	11.457						
OP-MSXM080ML	114X7069	W05	MLZ038T5	G	27	4.250	5.469	6.787	8.230	9.821	11.578	13.518						
					32	3.953	5.136	6.411	7.803	9.334	11.025	12.892	5.271	2.438	2.16	3.03	70	39
					38	3.566	4.705	5.926	7.255	8.715	10.327	12.107						
					43	3.225	4.325	5.500	6.776	8.176	9.721	11.429						
OP-MSXM099ML	114X7071	W05	MLZ045T4	E	27	5.329	6.672	8.263	10.089	12.135	14.386	16.825						
					32	5.018	6.290	7.806	9.553	11.514	13.674	16.016	6.456	2.623	2.46	3.83	70	39
					38	4.645	5.822	7.239	8.880	10.731	12.775	14.994						
					43	4.337	5.425	6.750	8.297	10.049	11.990	14.101						
OP-MSXM108ML	114X7072	W05	MLZ048T4	E	27	5.637	7.050	8.708	10.601	12.721	15.056	17.592						
					32	5.298	6.641	8.223	10.033	12.062	14.299	16.730	6.819	2.840	2.40	3.74	70	39
					38	4.889	6.140	7.620	9.323	11.236	13.349	15.649						
					43	4.548	5.714	7.104	8.709	10.520	12.525	14.711						

MBP

(1) G - Compressor 230V/1~/50Hz, fan 230V/1~/50Hz
E - Compressor 400V/3~/50Hz, fan 230V/1~/50Hz

(2) Nominal conditions (EN13215), Evaporating temperatures at dew point, Superheat 10K, Subcooling 0K

(3) Rated conditions (EN13215), Evaporating temperature (dew point) -10°C, Ambient air temperature +32°C, Return Gas Temperature 20°C, Subcooling 0K

SEPR, Seasonal Energy Performance Ratio
Q [kW], Cooling Capacity
P [kW], Power Input

For regular updates and detailed capacities, please refer to **Coolselector®2** software

EcoDesign 2018

Model	Code	Version	Compressor	Electrical code (1)	Tamb [°C]	Cooling capacity Q [kW] (2) Te [°C] -15°C	-10°C	-5°C	0°C	5°C	10°C	15°C	EcoDesign (3) Q [kW]	P [kW]	COP	SEPR	Sound power level dB(A)	Sound pressure level @ 10m dB(A)
OP-MSGM012SC	114X7099	W05	SC12G	G	27	0.573	0.720	0.891	1.088	1.312	1.564	1.845						
					32	0.523	0.662	0.826	1.014	1.229	1.472	1.744	0.688	0.410	1.68		62	31
					38	0.462	0.592	0.746	0.924	1.128	1.359	1.619						
					43	0.411	0.534	0.679	0.848	1.042	1.263	1.513						
OP-MSGM015SC	114X7100	W05	SC15G	G	27	0.618	0.786	0.985	1.213	1.473	1.764	2.085						
					32	0.584	0.745	0.932	1.146	1.389	1.660	1.961	0.775	0.482	1.61		63	32
					38	0.535	0.686	0.860	1.058	1.280	1.530	1.805						
					43	0.487	0.631	0.794	0.978	1.185	1.416	1.671						
OP-MSGM018SC	114X7101	W05	SC18G	G	27	0.787	0.970	1.181	1.420	1.692	1.996	2.334						
					32	0.704	0.883	1.088	1.322	1.587	1.884	2.214	0.918	0.585	1.57		63	32
					38	0.625	0.796	0.992	1.216	1.470	1.755	2.074						
					43	0.570	0.732	0.919	1.133	1.375	1.648	1.954						
OP-MSGM021SC	114X7102	W05	SC21G	G	27	0.920	1.146	1.400	1.683	1.995	2.336	2.707						
					32	0.842	1.058	1.302	1.575	1.877	2.207	2.567	1.102	0.653	1.69		63	32
					38	0.754	0.956	1.185	1.442	1.729	2.044	2.388						
					43	0.681	0.868	1.083	1.325	1.596	1.896	2.226						
OP-MSGM026AJ	114X7103	W05	CAJ4492Y	G	27	1.167	1.489	1.863	2.294	2.782	3.330	3.936						
					32	1.059	1.361	1.711	2.112	2.568	3.079	3.647	1.414	0.777	1.82		62	31
					38	0.928	1.209	1.531	1.899	2.317	2.786	3.309						
					43	0.817	1.081	1.382	1.724	2.111	2.547	3.033						
OP-MSGM033AJ	114X7104	W05	CAJ4511Y	G	27	1.520	1.910	2.357	2.861	3.424	4.045	4.722						
					32	1.392	1.759	2.177	2.649	3.176	3.758	4.394	1.829	0.901	2.03		67	36
					38	1.234	1.575	1.961	2.395	2.879	3.414	4.001						
					43	1.101	1.420	1.780	2.182	2.631	3.129	3.674						
OP-MSXM034ML	114X7062	W05	MLZ015T4	E	27	1.941	2.403	2.952	3.595	4.339	5.187	6.142						
					32	1.816	2.256	2.776	3.386	4.091	4.897	5.807	2.344	1.044	2.25		69	38
					38	1.665	2.075	2.560	3.128	3.786	4.540	5.394						
					43	1.538	1.922	2.376	2.907	3.524	4.234	5.041						
OP-MSXM034ML	114X7061	W05	MLZ015T5	G	27	1.918	2.378	2.926	3.570	4.318	5.173	6.138						
					32	1.801	2.238	2.756	3.365	4.071	4.880	5.796	2.326	1.063	2.19		69	38
					38	1.657	2.066	2.547	3.112	3.768	4.521	5.376						
					43	1.534	1.918	2.369	2.896	3.509	4.215	5.019						
OP-MSXM046ML	114X7064	W05	MLZ021T4	E	27	2.627	3.249	3.975	4.812	5.765	6.838	8.030						
					32	2.448	3.043	3.734	4.530	5.437	6.457	7.594	3.167	1.372	2.31		69	38
					38	2.227	2.786	3.434	4.179	5.027	5.984	7.053						
					43	2.037	2.565	3.174	3.875	4.674	5.577	6.588						

MBP

This table continues on the next page

(1) G - Compressor 230V/1~/50Hz, fan 230V/1~/50Hz
E - Compressor 400V/3~/50Hz, fan 230V/1~/50Hz
(2) Nominal conditions (EN13215), Evaporating temperatures at dew point, Superheat 10K, Subcooling 0K
(3) Rated conditions (EN13215), Evaporating temperature (dew point) -10°C, Ambient air temperature +32°C, Return Gas Temperature 20°C, Subcooling 0K

SEPR, Seasonal Energy Performance Ratio
Q [kW], Cooling Capacity
P [kW], Power Input

For regular updates and detailed capacities, please refer to **Coolselector®2** software

Optyma™ Slim Pack - Performance data R513A MBP

Model	Code	Version	Compressor	Electrical code (1)	Tamb [°C]	Cooling capacity Q [kW] (2) Te [°C] -15°C	-10°C	-5°C	0°C	5°C	10°C	15°C	EcoDesign (3) Q [kW]	P [kW]	COP	SEPR	Sound power level dB(A)	Sound pressure level @ 10m dB(A)
OP-MSXM046ML	114X7063	W05	MLZ021T5	G	27	2.553	3.167	3.887	4.720	5.671	6.744	7.938						
					32	2.390	2.978	3.664	4.455	5.359	6.379	7.516	3.101	1.572	1.97		69	38
					38	2.188	2.741	3.383	4.123	4.968	5.923	6.991						
					43	2.015	2.536	3.140	3.835	4.629	5.529	6.538						
OP-MSXM057ML	114X7066	W05	MLZ026T4	E	27	3.198	3.959	4.836	5.832	6.952	8.198	9.567						
					32	2.967	3.698	4.535	5.485	6.552	7.738	9.043	3.853	1.684	2.29		69	38
					38	2.678	3.369	4.157	5.049	6.050	7.162	8.389						
					43	2.430	3.085	3.829	4.669	5.613	6.663	7.823						
OP-MSXM057ML	114X7065	W05	MLZ026T5	G	27	3.139	3.884	4.748	5.736	6.852	8.095	9.463						
					32	2.936	3.648	4.469	5.406	6.462	7.639	8.937	3.803	1.859	2.05		69	38
					38	2.683	3.353	4.120	4.992	5.976	7.073	8.284						
					43	2.464	3.096	3.816	4.634	5.555	6.583	7.722						
OP-MSXM068ML	114X7068	W05	MLZ030T4	E	27	3.996	4.933	6.037	7.321	8.796	10.469	12.343						
					32	3.750	4.646	5.697	6.918	8.321	9.913	11.700	4.830	1.951	2.48		70	39
					38	3.443	4.285	5.269	6.411	7.723	9.215	10.894						
					43	3.178	3.971	4.896	5.969	7.203	8.609	10.197						
OP-MSXM068ML	114X7067	W05	MLZ030T5	G	27	3.939	4.851	5.924	7.172	8.605	10.231	12.054						
					32	3.685	4.557	5.580	6.768	8.132	9.683	11.424	4.737	2.094	2.26		70	39
					38	3.369	4.189	5.147	6.260	7.539	8.995	10.636						
					43	3.098	3.870	4.772	5.819	7.024	8.399	9.953						
OP-MSXM080ML	114X7070	W05	MLZ038T4	E	27	4.678	5.758	7.025	8.494	10.173	12.069	14.184						
					32	4.380	5.410	6.614	8.007	9.600	11.400	13.412	5.627	2.217	2.54	3.82	70	39
					38	4.011	4.975	6.099	7.398	8.884	10.568	12.454						
					43	3.694	4.601	5.655	6.872	8.267	9.850	11.630						
OP-MSXM080ML	114X7069	W05	MLZ038T5	G	27	4.597	5.682	6.956	8.432	10.120	12.025	14.149						
					32	4.312	5.348	6.559	7.959	9.560	11.369	13.389	5.565	2.517	2.21	3.18	70	39
					38	3.957	4.930	6.062	7.369	8.862	10.553	12.446						
					43	3.650	4.568	5.631	6.857	8.259	9.849	11.635						
OP-MSXM099ML	114X7071	W05	MLZ045T4	E	27	5.715	7.037	8.578	10.350	12.362	14.615	17.106						
					32	5.347	6.604	8.064	9.740	11.641	13.772	16.133	6.879	2.830	2.43	3.71	70	39
					38	4.890	6.066	7.425	8.982	10.748	12.731	14.933						
					43	4.497	5.602	6.874	8.329	9.980	11.837	13.906						
OP-MSXM108ML	114X7072	W05	MLZ048T4	E	27	6.082	7.496	9.139	11.024	13.160	15.548	18.187						
					32	5.659	7.007	8.569	10.359	12.387	14.658	17.173	7.300	3.095	2.36	3.73	70	39
					38	5.137	6.402	7.862	9.534	11.429	13.556	15.919						
					43	4.691	5.882	7.254	8.823	10.604	12.608	14.842						

MBP

(1) G - Compressor 230V/1~/50Hz, fan 230V/1~/50Hz
E - Compressor 400V/3~/50Hz, fan 230V/1~/50Hz

(2) Nominal conditions (EN13215), Evaporating temperatures at dew point, Superheat 10K, Subcooling 0K

(3) Rated conditions (EN13215), Evaporating temperature (dew point) -10°C, Ambient air temperature +32°C, Return Gas Temperature 20°C, Subcooling 0K

SEPR, Seasonal Energy Performance Ratio
Q [kW], Cooling Capacity
P [kW], Power Input

For regular updates and detailed capacities, please refer to **Coolselector®2** software

EcoDesign 2018

Model	Code	Version	Compressor	Electrical code (1)	Tamb [°C]	Cooling capacity Q [kW] (2) Te [°C] -20°C	-15°C	-10°C	-5°C	0°C	5°C	10°C	EcoDesign (3) Q [kW]	P [kW]	COP	SEPR	Sound power level dB(A)	Sound pressure level @ 10m dB(A)
OP-MSXM034ML	114X7062	W05	MLZ015T4	E	27	2.372	2.942	3.595	4.338	5.175	6.110	7.142						
					32	2.193	2.731	3.348	4.050	4.843	5.729	6.711	3.409	1.647	2.07		69	38
					38	1.965	2.464	3.035	3.685	4.422	5.248	6.169						
					43	-	2.229	2.759	3.365	4.053	4.828	5.696						
OP-MSXM034ML	114X7061	W05	MLZ015T5	G	27	2.360	2.934	3.592	4.340	5.182	6.120	7.153						
					32	2.195	2.736	3.356	4.061	4.856	5.743	6.725	3.418	1.604	2.13		69	38
					38	1.992	2.491	3.063	3.715	4.451	5.277	6.194						
					43	-	2.283	2.812	3.416	4.102	4.875	5.737						
OP-MSXM046ML	114X7064	W05	MLZ021T4	E	27	3.178	3.933	4.791	5.759	6.840	8.035	9.343						
					32	2.930	3.640	4.446	5.355	6.372	7.499	8.738	4.535	2.237	2.03		69	38
					38	2.622	3.274	4.014	4.850	5.788	6.832	7.985						
					43	-	2.957	3.639	4.411	5.281	6.254	7.335						
OP-MSXM046ML	114X7063	W05	MLZ021T5	G	27	3.182	3.942	4.809	5.791	6.890	8.108	9.445						
					32	2.949	3.663	4.477	5.400	6.437	7.589	8.858	4.568	2.352	1.94		69	38
					38	2.665	3.318	4.065	4.914	5.871	6.941	8.127						
					43	-	3.025	3.713	4.496	5.384	6.382	7.495						
OP-MSXM057ML	114X7066	W05	MLZ026T4	E	27	3.811	4.724	5.742	6.868	8.104	9.450	10.901						
					32	3.473	4.333	5.289	6.345	7.506	8.770	10.138	5.406	2.940	1.84	3.15	69	38
					38	3.048	3.841	4.718	5.688	6.754	7.919	9.186						
					43	-	3.412	4.221	5.114	6.099	7.179	8.360						

This table continues on the next page

MBP

(1) G - Compressor 230V/1~/50Hz, fan 230V/1~/50Hz
E - Compressor 400V/3~/50Hz, fan 230V/1~/50Hz
(2) Nominal conditions (EN13215), Evaporating temperatures at dew point, Superheat 10K, Subcooling 0K
(3) Rated conditions (EN13215), Evaporating temperature (dew point) -10°C, Ambient air temperature +32°C, Return Gas Temperature 20°C, Subcooling 0K
SEPR, Seasonal Energy Performance Ratio
Q [kW], Cooling Capacity
P [kW], Power Input

Catalogue Optyma™ Slim Pack - Performance data R448A MBP

Model	Code	Version	Compressor	Electrical code (1)	Tamb [°C]	Cooling capacity Q [kW] (2) Te [°C] -20°C	-15°C	-10°C	-5°C	0°C	5°C	10°C	EcoDesign (3) Q [kW]	P [kW]	COP	SEPR	Sound power level dB(A)	Sound pressure level @ 10m dB(A)
OP-MSXM057ML	114X7065	W05	MLZ026T5	G	27	3.863	4.769	5.790	6.932	8.193	9.572	11.064						
					32	3.561	4.404	5.354	6.416	7.593	8.883	10.284	5.475	3.082	1.78	2.93	69	38
					38	3.185	3.945	4.803	5.766	6.836	8.016	9.306						
					43	-	3.548	4.323	5.197	6.175	7.260	8.454						
OP-MSXM068ML	114X7067	W05	MLZ030T5	G	27	4.812	5.958	7.265	8.744	10.404	12.248	14.278						
					32	4.447	5.529	6.761	8.157	9.726	11.473	13.403	6.890	3.266	2.11	3.30	70	39
					38	3.993	4.993	6.132	7.424	8.879	10.507	12.313						
					43	-	4.531	5.587	6.788	8.146	9.671	11.373						
OP-MSXM068ML	114X7068	W05	MLZ030T4	E	27	4.860	5.997	7.295	8.767	10.419	12.259	14.287						
					32	4.485	5.559	6.783	8.172	9.734	11.476	13.402	6.911	3.138	2.20	3.48	70	39
					38	4.012	5.003	6.134	7.418	8.867	10.490	12.292						
					43	-	4.516	5.564	6.758	8.109	9.629	11.326						
OP-MSXM080ML	114X7069	W05	MLZ038T5	G	27	5.554	6.850	8.310	9.943	11.753	13.739	15.900						
					32	5.167	6.388	7.759	9.290	10.988	12.855	14.891	7.919	3.985	1.99	3.07	70	39
					38	4.680	5.803	7.062	8.467	10.027	11.747	13.631						
					43	-	5.292	6.452	7.747	9.188	10.783	12.539						
OP-MSXM080ML	114X7070	W05	MLZ038T4	E	27	5.654	6.949	8.417	10.066	11.901	13.922	16.126						
					32	5.214	6.433	7.812	9.361	11.088	12.995	15.081	7.969	3.716	2.14	3.49	70	39
					38	4.667	5.786	7.053	8.479	10.073	11.838	13.779						
					43	-	5.227	6.395	7.714	9.192	10.836	12.654						
OP-MSXM099ML	114X7071	W05	MLZ045T4	E	27	6.863	8.500	10.345	12.405	14.683	17.178	19.881						
					32	6.342	7.876	9.600	11.525	13.656	15.995	18.537	9.800	4.693	2.09	3.46	70	39
					38	5.692	7.092	8.663	10.419	12.367	14.513	16.859						
					43	-	6.412	7.848	9.456	11.247	13.228	15.406						
OP-MSXM108ML	114X7072	W05	MLZ048T4	E	27	7.357	9.067	10.997	13.154	15.541	18.156	20.992						
					32	6.775	8.377	10.182	12.201	14.439	16.897	19.572	10.403	5.300	1.96	3.31	70	39
					38	6.050	7.513	9.161	11.008	13.061	15.326	17.804						
					43	-	6.764	8.274	9.971	11.865	13.964	16.275						

MBP
(1) G - Compressor 230V/1~/50Hz, fan 230V/1~/50Hz
E - Compressor 400V/3~/50Hz, fan 230V/1~/50Hz
(2) Nominal conditions (EN13215), Evaporating temperatures at dew point, Superheat 10K, Subcooling 0K
(3) Rated conditions (EN13215), Evaporating temperature (dew point) -10°C, Ambient air temperature +32°C, Return Gas Temperature 20°C, Subcooling 0K

SEPR, Seasonal Energy Performance Ratio
Q [kW], Cooling Capacity
P [kW], Power Input

For regular updates and detailed capacities, please refer to **Coolselector®2** software

EcoDesign 2018

Model	Code	Version	Compressor	Electrical code (1)	Tamb [°C]	Cooling capacity Q [kW] (2) Te [°C] -20°C	-15°C	-10°C	-5°C	0°C	5°C	10°C	EcoDesign (3) Q [kW]	P [kW]	COP	SEPR	Sound power level dB(A)	Sound pressure level @ 10m dB(A)
OP-MSYM009MY	114X7108	W05	MLY90RAb	G	27	-	0.668	0.878	1.098	1.327	1.566	-						
					32	-	0.609	0.801	1.004	1.217	1.441	-	0.813	0.430	1.89		62	31
					38	-	0.540	0.710	0.892	1.086	1.290	-						
					43	-	0.482	0.635	0.800	0.976	1.164	-						
OP-MSYM012MP	114X7109	W05	MPT12RA	G	27	-	0.930	1.198	1.478	1.768	2.067	-						
					32	-	0.848	1.095	1.353	1.623	1.902	-	1.112	0.589	1.89		65	34
					38	-	0.751	0.971	1.204	1.449	1.705	-						
					43	-	0.670	0.868	1.080	1.304	1.541	-						
OP-MSYM014MP	114X7110	W05	MPT14RA	G	27	-	0.978	1.251	1.544	1.859	2.193	-						
					32	-	0.896	1.147	1.421	1.716	2.032	-	1.166	0.729	1.60		60	29
					38	-	0.799	1.024	1.273	1.544	1.838	-						
					43	-	0.718	0.922	1.150	1.401	1.676	-						
OP-MSBM018AJ	114X7111	W05	CAJ9510Z	G	27	0.932	1.233	1.594	2.022	2.527	3.114	3.791						
					32	0.854	1.134	1.469	1.868	2.339	2.889	3.524	1.491	0.781	1.91		64	33
					38	-	1.015	1.321	1.685	2.117	2.622	3.209						
					43	-	0.916	1.199	1.535	1.934	2.404	2.950						
OP-MSBM024AJ	114X7097	W05	CAJ9513Z	G	27	1.153	1.549	2.021	2.577	3.222	3.960	4.796						
					32	1.041	1.409	1.847	2.363	2.964	3.655	4.439	1.876	0.902	2.08		64	33
					38	-	1.244	1.643	2.113	2.663	3.297	4.021						
					43	-	1.107	1.475	1.909	2.417	3.006	3.679						
OP-MSBM026AJ	114X7083	W05	CAJ4517Z	G	27	1.321	1.737	2.227	2.802	3.469	4.235	5.103						
					32	1.203	1.591	2.047	2.582	3.205	3.923	4.739	2.080	1.009	2.06		67	36
					38	-	1.416	1.833	2.323	2.894	3.554	4.309						
					43	-	1.271	1.657	2.109	2.638	3.252	3.956						
OP-MSBM026AJ	114X7093	W05	TAJ4517Z	E	27	1.298	1.730	2.233	2.819	3.495	4.268	5.144						
					32	1.169	1.575	2.048	2.597	3.232	3.960	4.785	2.081	1.059	1.97		67	36
					38	-	1.388	1.824	2.330	2.917	3.590	4.356						
					43	-	1.231	1.637	2.109	2.654	3.283	4.000						
OP-MSBM034AJ	114X7094	W05	TAJ4519Z	E	27	1.650	2.164	2.762	3.451	4.239	5.132	6.131						
					32	1.503	1.986	2.546	3.191	3.930	4.768	5.708	2.591	1.350	1.92		68	37
					38	-	1.771	2.288	2.882	3.562	4.336	5.206						
					43	-	1.589	2.071	2.625	3.259	3.980	4.792						
OP-MSBM034AJ	114X7084	W05	CAJ4519Z	G	27	1.650	2.185	2.805	3.521	4.340	5.269	6.309						
					32	1.498	2.000	2.581	3.251	4.018	4.889	5.866	2.627	1.416	1.86		68	37
					38	-	1.776	2.310	2.925	3.630	4.431	5.333						
					43	-	1.588	2.083	2.652	3.306	4.050	4.889						
OP-MSXM034ML	114X7062	W05	MLZ015T4	E	27	2.367	2.937	3.590	4.334	5.172	6.108	7.142						
					32	2.187	2.726	3.343	4.046	4.839	5.727	6.711	3.409	1.647	2.07		69	38
					38	1.960	2.458	3.029	3.681	4.418	5.246	6.169						
					43	-	2.224	2.754	3.360	4.049	4.826	5.696						
OP-MSXM034ML	114X7061	W05	MLZ015T5	G	27	2.355	2.929	3.587	4.336	5.179	6.118	7.153						
					32	2.189	2.731	3.351	4.057	4.852	5.741	6.725	3.418	1.604	2.13		69	38
					38	1.987	2.486	3.058	3.710	4.447	5.274	6.194						
					43	-	2.277	2.807	3.412	4.098	4.872	5.737						

MBP

This table continues on the next page

(1) G - Compressor 230V/1~/50Hz, fan 230V/1~/50Hz
E - Compressor 400V/3~/50Hz, fan 230V/1~/50Hz
(2) Nominal conditions (EN13215), Evaporating temperatures at dew point, Superheat 10K, Subcooling 0K
(3) Rated conditions (EN13215), Evaporating temperature (dew point) -10°C, Ambient air temperature +32°C, Return Gas Temperature 20°C, Subcooling 0K
SEPR, Seasonal Energy Performance Ratio
Q [kW], Cooling Capacity
P [kW], Power Input

For regular updates and detailed capacities, please refer to **Coolselector®2** software

Model	Code	Version	Compressor	Electrical code (1)	Tamb [°C]	Cooling capacity Q [kW] (2) Te [°C] -20°C	-15°C	-10°C	-5°C	0°C	5°C	10°C	EcoDesign (3) Q [kW]	P [kW]	COP	SEPR	Sound power level dB(A)	Sound pressure level @ 10m dB(A)
OP-MSXM046ML	114X7064	W05	MLZ021T4	E	27	3.171	3.926	4.785	5.753	6.835	8.032	9.343						
					32	2.923	3.633	4.439	5.349	6.367	7.497	8.738	4.535	2.237	2.03		69	38
					38	2.615	3.267	4.007	4.843	5.783	6.829	7.985						
					43	-	2.950	3.632	4.405	5.276	6.251	7.335						
OP-MSXM046ML	114X7063	W05	MLZ021T5	G	27	3.175	3.935	4.802	5.785	6.885	8.106	9.445						
					32	2.942	3.655	4.470	5.394	6.432	7.586	8.858	4.568	2.352	1.94		69	38
					38	2.657	3.311	4.058	4.908	5.866	6.938	8.127						
					43	-	3.018	3.705	4.490	5.379	6.379	7.495						
OP-MSXM057ML	114X7066	W05	MLZ026T4	E	27	3.803	4.716	5.734	6.861	8.099	9.446	10.901						
					32	3.464	4.325	5.281	6.338	7.500	8.767	10.138	5.406	2.940	1.84	3.15	69	38
					38	3.040	3.832	4.710	5.680	6.748	7.916	9.186						
					43	-	3.403	4.213	5.107	6.093	7.176	8.360						
OP-MSXM057ML	114X7065	W05	MLZ026T5	G	27	3.855	4.760	5.782	6.924	8.188	9.569	11.064						
					32	3.553	4.395	5.345	6.409	7.587	8.880	10.284	5.475	3.082	1.78	2.93	69	38
					38	3.176	3.936	4.795	5.758	6.830	8.013	9.306						
					43	-	3.539	4.315	5.190	6.169	7.257	8.454						
OP-MSXM068ML	114X7067	W05	MLZ030T5	G	27	4.802	5.948	7.255	8.735	10.397	12.244	14.278						
					32	4.436	5.518	6.751	8.148	9.719	11.469	13.403	6.890	3.266	2.11	3.30	70	39
					38	3.983	4.982	6.121	7.414	8.872	10.503	12.313						
					43	-	4.520	5.577	6.779	8.139	9.667	11.373						
OP-MSXM068ML	114X7068	W05	MLZ030T4	E	27	4.849	5.986	7.285	8.758	10.412	12.255	14.287						
					32	4.475	5.548	6.773	8.163	9.727	11.472	13.402	6.911	3.138	2.20	3.48	70	39
					38	4.001	4.992	6.123	7.409	8.860	10.486	12.292						
					43	-	4.505	5.553	6.748	8.102	9.625	11.326						
OP-MSXM080ML	114X7069	W05	MLZ038T5	G	27	5.542	6.838	8.298	9.933	11.744	13.735	15.900						
					32	5.155	6.375	7.747	9.279	10.980	12.850	14.891	7.919	3.985	1.99	3.07	70	39
					38	4.667	5.790	7.049	8.456	10.018	11.742	13.631						
					43	-	5.279	6.439	7.736	9.180	10.778	12.539						
OP-MSXM080ML	114X7070	W05	MLZ038T4	E	27	5.641	6.937	8.405	10.056	11.893	13.917	16.126						
					32	5.202	6.420	7.800	9.351	11.080	12.990	15.081	7.969	3.716	2.14	3.49	70	39
					38	4.654	5.774	7.041	8.469	10.064	11.833	13.779						
					43	-	5.214	6.383	7.703	9.183	10.832	12.654						
OP-MSXM099ML	114X7071	W05	MLZ045T4	E	27	6.848	8.485	10.330	12.392	14.673	17.172	19.881						
					32	6.327	7.860	9.585	11.512	13.646	15.989	18.537	9.800	4.693	2.09	3.46	70	39
					38	5.676	7.076	8.648	10.405	12.357	14.507	16.859						
					43	-	6.396	7.833	9.443	11.237	13.222	15.406						
OP-MSXM108ML	114X7072	W05	MLZ048T4	E	27	7.341	9.051	10.981	13.140	15.530	18.149	20.992						
					32	6.758	8.360	10.166	12.187	14.428	16.891	19.572	10.403	5.300	1.96	3.31	70	39
					38	6.033	7.496	9.145	10.994	13.050	15.319	17.804						
					43	-	6.748	8.258	9.957	11.854	13.958	16.275						

MBP

(1) G - Compressor 230V/1~/50Hz, fan 230V/1~/50Hz
E - Compressor 400V/3~/50Hz, fan 230V/1~/50Hz

(2) Nominal conditions (EN13215), Evaporating temperatures at dew point, Superheat 10K, Subcooling 0K

(3) Rated conditions (EN13215), Evaporating temperature (dew point) -10°C, Ambient air temperature +32°C, Return Gas Temperature 20°C, Subcooling 0K

SEPR, Seasonal Energy Performance Ratio
Q [kW], Cooling Capacity
P [kW], Power Input

For regular updates and detailed capacities, please refer to **Coolselector®2** software

EcoDesign 2018

Model	Code	Version	Compressor	Electrical code (1)	Tamb [°C]	Cooling capacity Q [kW] (2) Te [°C] -20°C	-15°C	-10°C	-5°C	0°C	5°C	10°C	EcoDesign (3) Q [kW]	P [kW]	COP	SEPR	Sound power level dB(A)	Sound pressure level @ 10m dB(A)
OP-MSBM018AJ	114X7111	W05	CAJ9510Z	G	27	0.957	1.220	1.526	1.879	2.280	2.732	3.234						
					32	0.867	1.111	1.393	1.718	2.088	2.506	2.971	1.457	0.887	1.64		64	33
					38	0.758	0.978	1.231	1.523	1.856	2.233	2.654						
					43	0.665	0.866	1.095	1.359	1.660	-	-						
OP-MSBM024AJ	114X709	W05	CAJ9513Z	G	27	1.194	1.550	1.962	2.434	2.967	3.559	4.210						
					32	1.069	1.398	1.778	2.213	2.704	3.253	3.856	1.858	1.018	1.83		64	33
					38	0.919	1.215	1.557	1.948	2.390	2.885	3.432						
					43	0.792	1.062	1.372	1.726	2.127	-	-						
OP-MSBM026AJ	114X7093	W05	TAJ4517Z	E	27	1.331	1.717	2.155	2.649	3.204	3.819	4.494						
					32	1.186	1.547	1.954	2.413	2.927	3.498	4.126	2.044	1.200	1.70		67	36
					38	1.009	1.340	1.709	2.125	2.590	3.108	3.677						
					43	0.863	1.166	1.504	1.882	2.306	-	-						
OP-MSBM026AJ	114X7083	W05	CAJ4517Z	G	27	1.364	1.733	2.156	2.639	3.185	3.792	4.460						
					32	1.230	1.571	1.963	2.408	2.912	3.474	4.094	2.053	1.144	1.80		67	36
					38	1.068	1.377	1.729	2.129	2.583	3.090	3.652						
					43	0.932	1.214	1.533	1.895	2.306	-	-						
OP-MSBM034AJ	114X7094	W05	TAJ4519Z	E	27	1.729	2.199	2.732	3.335	4.010	4.758	5.576						
					32	1.559	1.999	2.495	3.053	3.678	4.371	5.129	2.612	1.517	1.72		68	37
					38	1.352	1.754	2.204	2.710	3.275	3.901	4.587						
					43	1.174	1.545	1.957	2.418	2.932	-	-						
OP-MSBM034AJ	114X7084	W05	CAJ4519Z	G	27	1.723	2.213	2.768	3.393	4.093	4.868	5.713						
					32	1.549	2.006	2.520	3.099	3.746	4.461	5.244	2.639	1.589	1.66		68	37
					38	1.337	1.753	2.217	2.738	3.320	3.964	4.670						
					43	1.160	1.540	1.961	2.433	2.959	-	-						
OP-MSXM034ML	114X7062	W05	MLZ015T4	E	27	2.416	2.968	3.599	4.314	5.115	6.001	6.972						
					32	2.235	2.745	3.328	3.990	4.734	5.560	6.471	3.490	1.727	2.02		69	38
					38	2.013	2.470	2.995	3.591	4.264	5.017	5.854						
					43	1.823	2.235	2.708	3.248	3.861	-	-						
OP-MSXM034ML	114X7061	W05	MLZ015T5	G	27	2.435	2.988	3.622	4.341	5.145	6.036	7.014						
					32	2.250	2.762	3.350	4.017	4.767	5.602	6.521	3.512	1.744	2.01		69	38
					38	2.020	2.480	3.010	3.613	4.295	5.059	5.907						
					43	1.824	2.237	2.715	3.263	3.886	-	-						

MBP

This table continues on the next page

(1) G - Compressor 230V/1~/50Hz, fan 230V/1~/50Hz
E - Compressor 400V/3~/50Hz, fan 230V/1~/50Hz
(2) Nominal conditions (EN13215), Evaporating temperatures at dew point, Superheat 10K, Subcooling 0K
(3) Rated conditions (EN13215), Evaporating temperature (dew point) -10°C, Ambient air temperature +32°C, Return Gas Temperature 20°C, Subcooling 0K

SEPR, Seasonal Energy Performance Ratio
Q [kW], Cooling Capacity
P [kW], Power Input

For regular updates and detailed capacities, please refer to **Coolselector®2** software

Optyma™ Slim Pack - Performance data R452A MBP

Model	Code	Version	Compressor	Electrical code (1)	Tamb [°C]	Cooling capacity Q [kW] (2) Te [°C] -20°C	-15°C	-10°C	-5°C	0°C	5°C	10°C	EcoDesign (3) Q [kW]	P [kW]	COP	SEPR	Sound power level dB(A)	Sound pressure level @ 10m dB(A)
OP-MSXM046ML	114X7064	W05	MLZ021T4	E	27	3.254	4.003	4.854	5.810	6.873	8.042	9.315						
					32	2.989	3.684	4.473	5.361	6.351	7.444	8.641	4.695	2.310	2.03		69	38
					38	2.662	3.289	4.001	4.804	5.703	6.702	7.806						
					43	2.382	2.948	3.592	4.322	5.143	-	-						
OP-MSXM046ML	114X7063	W05	MLZ021T5	G	27	3.273	4.021	4.867	5.814	6.863	8.011	9.258						
					32	3.021	3.712	4.495	5.371	6.344	7.414	8.580	4.720	2.422	1.95		69	38
					38	2.708	3.328	4.030	4.818	5.697	6.669	7.737						
					43	2.440	2.996	3.626	4.337	5.135	-	-						
OP-MSXM057ML	114X7065	W05	MLZ026T5	G	27	4.063	4.991	6.034	7.195	8.472	9.863	11.365						
					32	3.748	4.604	5.566	6.636	7.816	9.106	10.503	5.848	2.956	1.98	3.16	69	38
					38	3.354	4.120	4.979	5.936	6.996	8.159	9.430						
					43	3.013	3.698	4.467	5.326	6.282	-	-						
OP-MSXM057ML	114X7066	W05	MLZ026T4	E	27	4.035	4.949	5.981	7.135	8.410	9.805	11.316						
					32	3.694	4.539	5.493	6.560	7.741	9.038	10.450	5.766	2.859	2.02	3.37	69	38
					38	3.267	4.023	4.877	5.834	6.900	8.077	9.367						
					43	2.895	3.571	4.337	5.200	6.165	-	-						
OP-MSXM068ML	114X7068	W05	MLZ030T4	E	27	4.911	6.018	7.288	8.727	10.338	12.120	14.073						
					32	4.537	5.559	6.731	8.063	9.559	11.223	13.055	7.062	3.363	2.10	3.39	70	39
					38	4.079	4.993	6.044	7.242	8.597	10.115	11.801						
					43	3.690	4.508	5.453	6.537	7.771	-	-						
OP-MSXM068ML	114X7067	W05	MLZ030T5	G	27	4.934	6.035	7.292	8.710	10.292	12.035	13.938						
					32	4.560	5.576	6.736	8.048	9.515	11.139	12.921	7.070	3.502	2.02	3.21	70	39
					38	4.098	5.007	6.046	7.224	8.550	10.027	11.662						
					43	3.702	4.516	5.449	6.513	7.717	-	-						
OP-MSXM080ML	114X7069	W05	MLZ038T5	G	27	5.708	7.011	8.488	10.142	11.976	13.987	16.172						
					32	5.241	6.449	7.818	9.354	11.060	12.938	14.989	8.209	4.157	1.97	3.14	70	39
					38	4.661	5.748	6.980	8.366	9.914	11.628	13.513						
					43	4.162	5.140	6.251	7.507	8.917	-	-						
OP-MSXM080ML	114X7070	W05	MLZ038T4	E	27	5.728	7.015	8.474	10.109	11.923	13.916	16.084						
					32	5.246	6.443	7.798	9.319	11.010	12.875	14.913	8.183	3.917	2.09	3.44	70	39
					38	4.644	5.724	6.949	8.328	9.867	11.574	13.454						
					43	4.122	5.100	6.210	7.465	8.873	-	-						
OP-MSXM099ML	114X7071	W05	MLZ045T4	E	27	7.099	8.676	10.460	12.453	14.655	17.062	19.667						
					32	6.529	7.982	9.625	11.465	13.502	15.737	18.169	10.112	4.988	2.03	3.33	70	39
					38	5.815	7.107	8.572	10.218	12.051	14.075	16.296						
					43	5.198	6.346	7.653	9.130	10.786	-	-						
OP-MSXM108ML	114X7072	W05	MLZ048T4	E	27	7.664	9.383	11.323	13.486	15.872	18.475	21.287						
					32	6.993	8.581	10.374	12.376	14.589	17.011	19.641	10.904	5.444	2.00	3.39	70	39
					38	6.157	7.575	9.179	10.978	12.975	15.175	17.584						
					43	5.433	6.699	8.136	9.756	11.567	-	-						

MBP

(1) G - Compressor 230V/1~/50Hz, fan 230V/1~/50Hz
E - Compressor 400V/3~/50Hz, fan 230V/1~/50Hz

(2) Nominal conditions (EN13215), Evaporating temperatures at dew point, Superheat 10K, Subcooling 0K

(3) Rated conditions (EN13215), Evaporating temperature (dew point) -10°C, Ambient air temperature +32°C, Return Gas Temperature 20°C, Subcooling 0K

SEPR, Seasonal Energy Performance Ratio
Q [kW], Cooling Capacity
P [kW], Power Input

For regular updates and detailed capacities, please refer to **Coolselector®2** software

EcoDesign 2018

Model	Code	Version	Compressor	Electrical code (1)	Tamb [°C]	Cooling capacity Q [kW] (2) Te [°C] -20°C	-15°C	-10°C	-5°C	0°C	5°C	10°C	EcoDesign (3) Q [kW]	P [kW]	COP	SEPR	Sound power level dB(A)	Sound pressure level @ 10m dB(A)
OP-MSYM009MY	114X7108	W05	MLY90RAb	G	27	-	0.814	1.007	1.217	1.443	1.684	1.941						
					32	-	0.737	0.914	1.108	1.319	1.546	1.790	0.957	0.480	1.99		63	32
					38	-	0.644	0.802	0.978	1.171	1.381	1.609						
					43	-	0.568	0.709	0.869	1.047	1.244	1.459						
OP-MSYM012MP	114X7109	W05	MPT12RA	G	27	-	1.115	1.365	1.631	1.914	2.213	2.526						
					32	-	1.010	1.239	1.486	1.751	2.033	2.331	1.300	0.646	2.01		65	34
					38	-	0.883	1.089	1.313	1.556	1.817	2.097						
					43	-	0.779	0.964	1.169	1.394	1.638	1.902						
OP-MSYM014MP	114X7110	W05	MPT14RA	G	27	-	1.130	1.396	1.685	1.999	2.335	2.693						
					32	-	1.031	1.276	1.546	1.841	2.160	2.502	1.340	0.795	1.69		60	29
					38	-	0.913	1.133	1.380	1.652	1.950	2.274						
					43	-	0.814	1.014	1.241	1.494	1.775	2.084						
OP-MSBM018AJ	114X7111	W05	CAJ9510Z	G	27	1.184	1.477	1.818	2.209	2.651	3.146	3.694						
					32	1.078	1.351	1.666	2.024	2.429	2.881	3.382	1.746	0.903	1.93		64	33
					38	-	-	1.480	1.800	2.160	2.561	3.005						
					43	-	-	1.324	1.612	1.933	2.292	2.688						
OP-MSBM024AJ	114X7097	W05	CAJ9513Z	G	27	-	1.822	2.288	2.820	3.418	4.082	4.808						
					32	-	1.638	2.067	2.557	3.108	3.720	4.392	2.168	1.045	2.07		64	33
					38	-	1.417	1.804	2.243	2.738	3.288	3.895						
					43	-	1.235	1.586	1.983	2.431	2.930	3.482						
OP-MSBM026AJ	114X7093	W05	TAJ4517Z	E	27	1.595	2.029	2.522	3.078	3.700	4.388	5.141						
					32	1.416	1.824	2.285	2.802	3.379	4.017	4.717	2.398	1.231	1.95		67	36
					38	1.199	1.575	1.996	2.465	2.987	3.565	4.200						
					43	-	1.368	1.754	2.182	2.657	3.184	3.765						
OP-MSBM026AJ	114X7083	W05	CAJ4517Z	G	27	1.626	2.039	2.517	3.061	3.674	4.356	5.104						
					32	1.459	1.844	2.285	2.788	3.353	3.982	4.675	2.399	1.172	2.05		67	36
					38	1.259	1.609	2.007	2.459	2.967	3.533	4.159						
					43	-	1.413	1.776	2.185	2.644	3.157	3.728						
OP-MSBM034AJ	114X7094	W05	TAJ4519Z	E	27	2.018	2.526	3.102	3.747	4.461	5.242	6.087						
					32	1.811	2.287	2.823	3.420	4.079	4.799	5.581	2.970	1.573	1.89		68	37
					38	1.559	1.997	2.484	3.023	3.616	4.264	4.969						
					43	-	1.753	2.199	2.689	3.227	3.815	4.456						

MBP

This table continues on the next page

(1) G - Compressor 230V/1~/50Hz, fan 230V/1~/50Hz
E - Compressor 400V/3~/50Hz, fan 230V/1~/50Hz
(2) Nominal conditions (EN13215), Evaporating temperatures at dew point, Superheat 10K, Subcooling 0K
(3) Rated conditions (EN13215), Evaporating temperature (dew point) -10°C, Ambient air temperature +32°C, Return Gas Temperature 20°C, Subcooling 0K
SEPR, Seasonal Energy Performance Ratio
Q [kW], Cooling Capacity
P [kW], Power Input

For regular updates and detailed capacities, please refer to **Coolselector®2** software

Optyma™ Slim Pack - Performance data R404A/R507 MBP

Model	Code	Version	Compressor	Electrical code (1)	Tamb [°C]	Cooling capacity Q [kW] (2) Te [°C] -20°C	-15°C	-10°C	-5°C	0°C	5°C	10°C	EcoDesign (3) Q [kW]	P [kW]	COP	SEPR	Sound power level dB(A)	Sound pressure level @ 10m dB(A)
OP-MSBM034AJ	114X7084	W05	CAJ4519Z	G	27	2.015	2.547	3.147	3.819	4.563	5.376	6.257						
					32	1.802	2.300	2.859	3.480	4.166	4.916	5.729	3.008	1.650	1.82		68	37
					38	1.544	2.000	2.506	3.065	3.680	4.353	5.085						
					43	-	1.749	2.209	2.715	3.270	3.878	4.541						
OP-MSXM034ML	114X7062	W05	MLZ015T4	E	27	2.502	3.081	3.734	4.463	5.272	6.158	7.121						
					32	2.251	2.793	3.398	4.073	4.820	5.640	6.535	3.580	1.693	2.11		69	38
					38	1.926	2.424	2.974	3.584	4.258	5.001	5.814						
					43	1.634	2.095	2.600	3.157	3.772	4.451	5.198						
OP-MSXM034ML	114X7061	W05	MLZ015T5	G	27	2.591	3.149	3.783	4.496	5.289	6.163	7.122						
					32	2.373	2.890	3.478	4.142	4.882	5.703	6.608	3.669	1.762	2.08		69	38
					38	2.101	2.569	3.102	3.705	4.383	5.139	5.981						
					43	1.867	2.293	2.780	3.334	3.959	4.662	5.452						
OP-MSXM044ML	114X7162	W05	MLZ019T4	E	27	3.235	3.925	4.696	5.556	6.511	7.563	8.716						
					32	2.959	3.596	4.307	5.101	5.985	6.964	8.044	4.556	2.203	2.07		69	38
					38	2.604	3.178	3.816	4.530	5.329	6.220	7.212						
					43	2.289	2.808	3.385	4.032	4.759	5.576	6.497						
OP-MSXM044ML	114X7161	W05	MLZ019T5	G	27	3.279	3.979	4.768	5.646	6.615	7.674	8.823						
					32	2.995	3.641	4.368	5.180	6.078	7.064	8.141	4.622	2.266	2.04		69	38
					38	2.634	3.213	3.865	4.595	5.407	6.305	7.294						
					43	2.316	2.837	3.425	4.086	4.825	5.649	6.566						
OP-MSXM046ML	114X7064	W05	MLZ021T4	E	27	3.404	4.124	4.928	5.824	6.815	7.905	9.099						
					32	3.108	3.772	4.514	5.340	6.257	7.271	8.390	4.778	2.350	2.03		69	38
					38	2.729	3.325	3.990	4.731	5.559	6.482	7.511						
					43	2.392	2.930	3.529	4.199	4.952	5.798	6.754						
OP-MSXM046ML	114X7063	W05	MLZ021T5	G	27	3.450	4.182	5.004	5.917	6.922	8.018	9.203						
					32	3.147	3.821	4.578	5.421	6.352	7.371	8.481	4.848	2.435	1.99		69	38
					38	2.762	3.365	4.043	4.800	5.640	6.567	7.586						
					43	2.422	2.964	3.574	4.258	5.022	5.872	6.817						

MBP

This table continues on the next page

(1) G - Compressor 230V/1~/50Hz, fan 230V/1~/50Hz
E - Compressor 400V/3~/50Hz, fan 230V/1~/50Hz
(2) Nominal conditions (EN13215), Evaporating temperatures at dew point, Superheat 10K, Subcooling 0K
(3) Rated conditions (EN13215), Evaporating temperature (dew point) -10°C, Ambient air temperature +32°C, Return Gas Temperature 20°C, Subcooling 0K
SEPR, Seasonal Energy Performance Ratio
Q [kW], Cooling Capacity
P [kW], Power Input

For regular updates and detailed capacities, please refer to **Coolselector®2** software

Model	Code	Version	Compressor	Electrical code (1)	Tamb [°C]	Cooling capacity Q [kW] (2) Te [°C] -20°C	-15°C	-10°C	-5°C	0°C	5°C	10°C	EcoDesign (3) Q [kW]	P [kW]	COP	SEPR	Sound power level dB(A)	Sound pressure level @ 10m dB(A)
OP-MSXM057ML	114X7065	W05	MLZ026T5	G	27	3.973	4.806	5.741	6.777	7.912	9.142	10.467						
					32	3.619	4.382	5.238	6.189	7.234	8.373	9.609	5.571	3.291	1.69	2.90	69	38
					38	3.179	3.855	4.615	5.460	6.396	7.424	8.553						
					43	2.795	3.397	4.073	4.830	5.673	6.609	7.650						
OP-MSXM057ML	114X7066	W05	MLZ026T4	E	27	3.977	4.812	5.749	6.788	7.926	9.162	10.493						
					32	3.625	4.390	5.249	6.203	7.252	8.397	9.639	5.580	3.164	1.76	3.01	69	38
					38	3.189	3.868	4.630	5.480	6.420	7.455	8.590						
					43	2.809	3.414	4.094	4.855	5.703	6.645	7.693						
OP-MSXM068ML	114X7068	W05	MLZ030T4	E	27	5.271	6.443	7.784	9.300	10.998	12.880	14.945						
					32	4.832	5.926	7.177	8.594	10.185	11.954	13.907	7.566	3.279	2.31	3.73	70	39
					38	4.284	5.279	6.418	7.711	9.170	10.803	12.618						
					43	3.809	4.717	5.758	6.945	8.291	9.806	11.506						
OP-MSXM068ML	114X7067	W05	MLZ030T5	G	27	5.273	6.446	7.786	9.302	10.997	12.876	14.938						
					32	4.832	5.927	7.178	8.594	10.182	11.949	13.898	7.568	3.353	2.26	3.66	70	39
					38	4.283	5.278	6.417	7.709	9.166	10.795	12.606						
					43	3.806	4.714	5.755	6.941	8.284	9.797	11.492						
OP-MSXM080ML	114X7069	W05	MLZ038T5	G	27	6.066	7.469	9.041	10.768	12.634	14.626	16.730						
					32	5.504	6.806	8.273	9.892	11.650	13.536	15.538	8.735	4.027	2.17	3.33	70	39
					38	4.826	5.992	7.319	8.797	10.415	12.164	14.039						
					43	4.268	5.307	6.506	7.857	9.349	10.976	12.738						
OP-MSXM080ML	114X7070	W05	MLZ038T4	E	27	6.238	7.571	9.084	10.780	12.662	14.727	16.973						
					32	5.708	6.948	8.353	9.930	11.682	13.612	15.720	8.822	3.856	2.29	3.71	70	39
					38	5.026	6.146	7.415	8.842	10.434	12.197	14.137						
					43	4.423	5.435	6.584	7.881	9.335	10.956	12.755						
OP-MSXM099ML	114X7071	W05	MLZ045T4	E	27	7.288	8.825	10.553	12.472	14.580	16.875	19.357						
					32	6.643	8.055	9.648	11.422	13.379	15.521	17.853	10.216	5.001	2.04	3.37	70	39
					38	5.823	7.082	8.508	10.106	11.880	13.836	15.989						
					43	5.100	6.228	7.513	8.960	10.580	12.381	14.387						
OP-MSXM108ML	114X7072	W05	MLZ048T4	E	27	7.856	9.491	11.303	13.308	15.517	17.940	20.584						
					32	7.147	8.653	10.321	12.168	14.209	16.459	18.932	10.943	5.478	2.00	3.31	70	39
					38	6.248	7.596	9.087	10.742	12.581	14.623	16.892						
					43	5.457	6.671	8.012	9.504	11.172	13.041	15.144						

MBP

(1) G - Compressor 230V/1~/50Hz, fan 230V/1~/50Hz
E - Compressor 400V/3~/50Hz, fan 230V/1~/50Hz

(2) Nominal conditions (EN13215), Evaporating temperatures at dew point, Superheat 10K, Subcooling 0K

(3) Rated conditions (EN13215), Evaporating temperature (dew point) -10°C, Ambient air temperature +32°C, Return Gas Temperature 20°C, Subcooling 0K

SEPR, Seasonal Energy Performance Ratio
Q [kW], Cooling Capacity
P [kW], Power Input

For regular updates and detailed capacities, please refer to **Coolselector®2** software

Application	Code	Model	Compressor Model	Electrical Code (1)	Refrigerant (2)	Condenser Coil			Fan		Receiver	Dimensions				Connection		Weight	
						Type	Airflow	Internal Volume	Number	Blade ø	Volume	Housing	Height	Width	Length	Suction valve	Liquid valve	Gross	Net
	W05						(m^2/h)	(dm^3)		(mm)	(L)		mm	mm	mm	inch	inch	Kg	Kg
LBP	114X7106	OP-LSQM014MP	MPT14LA	G	Q	A7	2,200	0.39	1	365	1.3	B1	530	910	364	3/8"	3/8"	64	51
LBP	114X7107	OP-LSQM018MP	MPT16LA	G	Q	A7	2,200	0.39	1	365	1.3	B1	530	910	364	3/8"	3/8"	65	51
LBP	114X7085	OP-LSQM026AJ	CAJ2446Z	G	Q	D7	3,300	0.58	1	450	3.4	B2	690	1079	464	1/2"	1/2"	77	62
LBP	114X7086	OP-LSQM034AJ	CAJ2464Z	G	Q	D7	3,300	0.58	1	450	3.4	B2	690	1079	464	1/2"	1/2"	77	62
LBP	114X7087	OP-LSQM048NT	NTZ048-5	G	Q	D7	3,300	0.58	1	450	3.4	B2	690	1079	464	5/8"	1/2"	77	62
LBP	114X7088	OP-LSQM048NT	NTZ048-4	E	Q	D7	3,300	0.58	1	450	3.4	B2	690	1079	464	5/8"	1/2"	77	62
LBP	114X7095	OP-LSQM074FH	FH2511Z	G	Q	D7	3,300	0.58	1	450	3.4	B2	690	1079	464	5/8"	1/2"	92	77
LBP	114X7096	OP-LSQM074FH	TFH2511Z	E	Q	D7	3,300	0.58	1	450	3.4	B2	690	1079	464	5/8"	1/2"	88	73
LBP	114X7090	OP-LSQM068NT	NTZ068-4	E	Q	D7	3,300	0.58	1	450	3.4	B2	690	1079	464	5/8"	1/2"	80	65
LBP	114X7089	OP-LSQM068NT	NTZ068-5	G	Q	D7	3,300	0.58	1	450	3.4	B2	690	1079	464	5/8"	1/2"	79	64
LBP	114X7091	OP-LSQM067LL	LLZ013T4	E	Q	G7	5,200	1.62	1	500	6.2	B3	825	1105	464	3/4"	1/2"	97	78
LBP	114X7092	OP-LSQM084LL	LLZ015T4	E	Q	G7	5,200	1.62	1	500	6.2	B3	825	1105	464	3/4"	1/2"	97	78
LBP	114X7075	OP-LSQM098LL	LLZ018T4	E	Q	G7	5,200	1.62	1	500	6.2	B3	825	1105	464	3/4"	1/2"	97	78
MBP	114X7099	OP-MSGM012SC	SC12G	G	G	A7	2,200	0.39	1	365	1.3	B1	530	910	364	3/8"	3/8"	66	52
MBP	114X7100	OP-MSGM015SC	SC15G	G	G	A7	2,200	0.39	1	365	1.3	B1	530	910	364	3/8"	3/8"	66	52
MBP	114X7101	OP-MSGM018SC	SC18G	G	G	A7	2,200	0.39	1	365	1.3	B1	530	910	364	3/8"	3/8"	67	53
MBP	114X7108	OP-MSYM009MY	MLY90RAb	G	Y	A7	2,200	0.39	1	365	1.3	B1	530	910	364	3/8"	3/8"	64	50
MBP	114X7102	OP-MSGM021SC	SC21G	G	G	A7	2,200	0.39	1	365	1.3	B1	530	910	364	3/8"	3/8"	67	53
MBP	114X7109	OP-MSYM012MP	MPT12RA	G	Y	A7	2,200	0.39	1	365	1.3	B1	530	910	364	3/8"	3/8"	64	51
MBP	114X7110	OP-MSYM014MP	MPT14RA	G	Y	A7	2,200	0.39	1	365	1.3	B1	530	910	364	3/8"	3/8"	65	52
MBP	114X7103	OP-MSGM026AJ	CAJ4492Y	G	G	D7	3,300	0.58	1	450	3.4	B2	690	1079	464	1/2"	1/2"	78	63
MBP	114X7111	OP-MSBM018AJ	CAJ9510Z	G	B	D7	3300	0.58	1	450	3.4	B2	690	1079	464	1/2"	1/2"	77	62
MBP	114X7104	OP-MSGM033AJ	CAJ4511Y	G	G	D7	3,300	0.58	1	450	3.4	B2	690	1079	464	1/2"	1/2"	79	64
MBP	114X7097	OP-MSBM024AJ	CAJ9513Z	G	B	D7	3,300	0.58	1	450	3.4	B2	690	1079	464	1/2"	1/2"	78	63
MBP	114X7093	OP-MSBM026AJ	TAJ4517Z	E	B	D7	3,300	0.58	1	450	3.4	B2	690	1079	464	1/2"	1/2"	74	59
MBP	114X7083	OP-MSBM026AJ	CAJ4517Z	G	B	D7	3,300	0.58	1	450	3.4	B2	690	1079	464	1/2"	1/2"	78	63
MBP	114X7094	OP-MSBM034AJ	TAJ4519Z	E	B	D7	3,300	0.58	1	450	3.4	B2	690	1079	464	1/2"	1/2"	77	62
MBP	114X7084	OP-MSBM034AJ	CAJ4519Z	G	B	D7	3,300	0.58	1	450	3.4	B2	690	1079	464	1/2"	1/2"	78	63
MBP	114X7062	OP-MSXM034ML	MLZ015T4	E	X	D7	3,300	0.58	1	450	3.4	B2	690	1079	464	3/4"	1/2"	85	70
MBP	114X7061	OP-MSXM034ML	MLZ015T5	G	X	D7	3,300	0.58	1	450	3.4	B2	690	1079	464	3/4"	1/2"	85	70
MBP	114X7162	OP-MSXM044ML	MLZ019T5	E	X	D7	3,300	0.58	1	450	3.4	B2	690	1079	464	3/4"	1/2"	85	70
MBP	114X7161	OP-MSXM044ML	MLZ019T5	G	X	D7	3,300	0.58	1	450	3.4	B2	690	1079	464	3/4"	1/2"	85	70
MBP	114X7064	OP-MSXM046ML	MLZ021T4	E	X	D7	3,300	0.58	1	450	3.4	B2	690	1079	464	3/4"	1/2"	85	70
MBP	114X7063	OP-MSXM046ML	MLZ021T5	G	X	D7	3,300	0.58	1	450	3.4	B2	690	1079	464	3/4"	1/2"	85	70
MBP	114X7065	OP-MSXM057ML	MLZ026T5	G	X	D7	3,300	0.58	1	450	3.4	B2	690	1079	464	3/4"	1/2"	85	70
MBP	114X7066	OP-MSXM057ML	MLZ026T4	E	X	D7	3,300	0.58	1	450	3.4	B2	690	1079	464	3/4"	1/2"	85	70
MBP	114X7068	OP-MSXM068ML	MLZ030T4	E	X	G7	5,200	1.62	1	500	6.2	B3	825	1105	464	7/8"	1/2"	95	76
MBP	114X7067	OP-MSXM068ML	MLZ030T5	G	X	G7	5,200	1.62	1	500	6.2	B3	825	1105	464	7/8"	1/2"	95	76
MBP	114X7069	OP-MSXM080ML	MLZ038T5	G	X	G7	5,200	1.62	1	500	6.2	B3	825	1105	464	7/8"	1/2"	96	77
MBP	114X7070	OP-MSXM080ML	MLZ038T4	E	X	G7	5,200	1.62	1	500	6.2	B3	825	1105	464	7/8"	1/2"	96	77
MBP	114X7071	OP-MSXM099ML	MLZ045T4	E	X	G7	5,200	1.62	1	500	6.2	B3	825	1105	464	7/8"	1/2"	98	79
MBP	114X7072	OP-MSXM108ML	MLZ048T4	E	X	G7	5,200	1.62	1	500	6.2	B3	825	1105	464	7/8"	1/2"	98	79

(1) G - Compressor 230V/1~/50Hz, fan 230V/1~/50Hz
E - Compressor 400V/3~/50Hz, fan 230V/1~/50Hz
(2) G - R134a
X - R134a, R404A/R507, R407A, R407F, R449A, R448A, R513A, R452A
Y - R404A/R507, R449A
Q - R404A/R507, R452A
H - R404A/R507

Designation		LSQM026AJ	LSQM034AJ	LSQM048NT	LSQM048NT	LSQM068NT	LSQM068NT	LSQM067LL
Code Number	W05	114X7085	114X7086	114X7087	114X7088	114X7089	114X7090	114X7091
Compressor Description		CAJ2446Z	CAJ2464Z	NTZ048-5	NTZ048-4	NTZ068-5	NTZ068-4	LLZ013T4
Oil		RL32HA/HT	RL32HA/HT	175PZ-POE	175PZ-POE	175PZ-POE	175PZ-POE	215PZ-POE46
Housing		B2	B2	B2	B2	B2	B2	B3
Spare Parts								
Compressor single pack		118U3992	118U3990	120F0228	120F0226	120F0232	120F0230	121L9535
Condenser		118U5218	118U5218	118U5218	118U5218	118U5218	118U5218	118U5219
Dual pressure switch		060-539766	060-539766	060-539766	060-539766	060-539766	060-539766	060-539766
Fan assembly		-	-	-	-	-	-	118U3829
Fan blade		118U3481	118U3481	118U3481	118U3481	118U3481	118U3481	-
Fan capacitor		118U3297	118U3297	118U3297	118U3297	118U3297	118U3297	-
Fan cowl/grill		118U3484	118U3484	118U3484	118U3484	118U3484	118U3484	118U3485
Fan motor		118U3823	118U3823	118U3823	118U3823	118U3823	118U3823	118U3829
Filter drier		023Z5041	023Z5041	023Z5041	023Z5041	023Z5041	023Z5041	023Z5044
Liquid valve		118U3761	118U3761	118U3761	118U3761	118U3761	118U3761	118U3761
Receiver		118U3475	118U3475	118U3475	118U3475	118U3475	118U3475	118U3476
Sight glass		014L0173	014L0173	014L0173	014L0173	014L0173	014L0173	014L0173
Suction valve		118U3761	118U3761	118U3764	118U3764	118U3764	118U3764	118U3762
Electrical Spare Parts								
Crankcase heater		120Z0057	120Z0057	120Z0459	120Z0459	120Z0459	120Z0459	120Z5040
Contactor kit		118U3893	118U3894	118U3894	118U3893	118U3867	118U3893	118U3896
Main switch kit	W05	118U3872	118U3976	118U3976	118U3872	118U3869	118U3873	118U3873
Overload relay		118U3876	118U3877	118U3877	118U3978	118U3879	118U3876	118U3877
Run capacitor				8173041	-	8173041	-	-
Starting capacitor		118U5191*	118U5192*	8173001	-	8173001	-	-
Starting relay				8173022	-	8173022	-	-
Sequence phase relay		-	-	-	-	-	-	118U3882
Electrical Characteristics								
Wiring Diagram	W05	WD2	WD2	WD2	WD5	WD2	WD5	WD6
LRA Compressor [A]		29	40	37	16	53	25	62
MCC Compressor [A]		7.9	10	11	4.8	17	8.4	12
Max cont.power [kW]		1.4	1.87	2.19	2.28	3.62	3.57	4.59
MCC Fan [A]		0.47	0.47	0.47	0.47	0.47	0.47	0.97
Fan Power [W]		1x68	1x68	1x68	1x68	1x68	1x68	1x130
Min Fuse rating gL/gG (A)		10	16	16	10	25	16	16
Accessories (Not Premounted)								
Acoustic hood				120Z0575	120Z0575	120Z0575	120Z0575	120Z5052
FSC Female connection		061H3140	061H3140	061H3140	061H3140	061H3140	061H3140	061H3140
Discharge Gas thermostat		7750009	7750009	7750009	7750009	7750009	7750009	7750009
Fusible plug		118U5170	118U5170	118U5170	118U5170	118U5170	118U5170	118U5170
Sheet Metal								
Top panel		118U5146	118U5146	118U5146	118U5146	118U5146	118U5146	118U5151
Fan panel		118U5147	118U5147	118U5147	118U5147	118U5147	118U5147	118U5152
Back panel		118U5148	118U5148	118U5148	118U5148	118U5148	118U5148	118U5153
Left side panel		118U5168	118U5168	118U5168	118U5168	118U5168	118U5168	118U5169
Service panel	W05	118U5149	118U5149	118U5149	118U5149	118U5149	118U5149	118U5154

MCC - Max Continuous Current
LRA - Locked Rotor Amps
XGE - FSC, Fan Speed Controller
* - Spare part, Starting Kit

Optyma™ Slim Pack - Spare parts & accessories - LBP

Designation		LSQM084LL	LSQM098LL	LSQM074FH	LSQM074FH	LSQM014MP	LSQM018MP
Code Number	W05	114X7092	114X7075	114X7095	114X7096	114X7106	114X7107
Compressor Description		LLZ015T4	LLZ018T4	FH2511Z	TFH2511Z	MPT14LA	MPT16LA
Oil		215PZ-POE46	215PZ-POE46	RL32HA/HT	RL32HA/HT	POE32	POE32
Housing		B3	B3	B2	B2	B1	B1
Spare Parts							
Compressor single pack		121L9537	121L9539	118U3914	118U3915	123B2126	123B2127
Condenser		118U5219	118U5219	118U5218	118U5218	118U5217	118U5217
Dual pressure switch		060-539766	060-539766	060-539766	060-539766	060-539766	060-539766
Fan assembly		118U3829	118U3829	-	-	-	-
Fan blade		-	-	118U3481	118U3481	118U3480	118U3480
Fan capacitor		-	-	118U3297	118U3297	118U3296	118U3296
Fan cowl/grill		118U3485	118U3485	118U3484	118U3484	118U3483	118U3483
Fan motor		118U3829	118U3829	118U3823	118U3823	118U3477	118U3477
Filter drier		023Z5044	023Z5044	023Z5041	023Z5041	023Z5040	023Z5040
Liquid valve		118U3761	118U3761	118U3761	118U3761	118U3414	118U3414
Receiver		118U3476	118U3476	118U3475	118U3475	118U3474	118U3474
Sight glass		014L0173	014L0173	014L0173	014L0173	014L0182	014L0182
Suction valve		118U3762	118U3762	118U3764	118U3764	118U3414	118U3414
Electrical Spare Parts							
Crankcase heater		120Z5040	120Z5040	120Z0459	120Z0459	118U0051	118U0051
Contactor kit		118U3896	118U3896	118U3867	118U3893	118U3893	118U3893
Main switch kit	W05	118U3874	118U3874	118U3870	118U3872	118U3975	118U3975
Overload relay		118U3878	118U3878	118U3880	118U3876	118U3978	118U3978
Run capacitor		-	-		-	123B9222	123B9219
Starting capacitor		-	-	118U5199*	-	123B9312	123B9316
Starting relay		-	-		-	123B9151	123B9151
Sequence phase relay		118U3882	118U3882	-	-	-	-
Electrical Characteristics							
Wiring Diagram	W05	WD6	WD6	WD2	WD5	WD7	WD7
LRA Compressor [A]		88.5	90	81	28	16	19
MCC Compressor [A]		15	14.4	24	7.2	5	4
Max cont.power [kW]		5.49	6.2	3.45	3.34	0.78	0.89
MCC Fan [A]		0.97	0.97	0.47	0.47	0.32	0.32
Fan Power [W]		1x130	1x130	1x68	1x68	1x25	1x25
Min Fuse rating gL/gG (A)		20	20	32	10	10	10
Accessories (Not Premounted)							
Acoustic hood		120Z5052	120Z5052	-	-	-	-
Discharge Gas thermostat		7750009	7750009	7750009	7750009	7750009	7750009
Fusible plug		118U5170	118U5170	118U5170	118U5170	118U5170	118U5170
Sheet Metal							
Top panel		118U5151	118U5151	118U5146	118U5146	118U5141	118U5141
Fan panel		118U5152	118U5152	118U5147	118U5147	118U5142	118U5142
Back panel		118U5153	118U5153	118U5148	118U5148	118U5143	118U5143
Left side panel		118U5169	118U5169	118U5168	118U5168	118U5167	118U5167
Service panel	W05	118U5154	118U5154	118U5149	118U5149	118U5144	118U5144

MCC - Max Continuous Current
LRA - Locked Rotor Amps

Designation		MSXM034ML	MSXM034ML	MSXM044ML	MSXM044ML	MSXM046ML	MSXM046ML	MSXM057ML	MSXM057ML	MSXM068ML
Code Number	W05	114X7061	114X7062	114X7161	114X7162	114X7063	114X7064	114X7065	114X7066	114X7067
Compressor Description		118U3867	MLZ015T4	MLZ019T5	MLZ019T4	MLZ021T5	MLZ021T4	MLZ026T5	MLZ026T4	MLZ030T5
Oil		215PZ-POE46	215PZ-POE46	215PZ-POE46	215PZ-POE46	215PZ-POE46	215PZ-POE46	215PZ-POE46	215PZ-POE46	215PZ-POE46
Housing		B2	B2	B2	B2	B2	B2	B2	B2	B3
Spare Parts										
Compressor single pack		121L8631	120U8725	121U8731	120U8725	121L8635	121L8633	121L8639	121L8637	121L8643
Condenser		118U5218	118U5218	118U5218	118U5218	118U5218	118U5218	118U5218	118U5218	118U5219
Dual pressure switch		060-539766	060-539766	060-539766	060-539766	060-539766	060-539766	060-539766	060-539766	060-539766
Fan assembly		-	-	-	-	-	-	-	-	118U3829
Fan blade		118U3481	118U3481	118U3481	118U3481	118U3481	118U3481	118U3481	118U3481	-
Fan capacitor		118U3297	118U3297	118U3297	118U3297	118U3297	118U3297	118U3297	118U3297	-
Fan cowl/grill		118U3484	118U3484	118U3484	118U3484	118U3484	118U3484	118U3484	118U3484	118U3485
Fan motor		118U3823	118U3823	118U3823	118U3823	118U3823	118U3823	118U3823	118U3823	118U3829
Filter drier		023Z5041	023Z5041	023Z5041	023Z5041	023Z5041	023Z5041	023Z5041	023Z5041	023Z5044
Liquid valve		118U3761	118U3761	118U3761	118U3761	118U3761	118U3761	118U3761	118U3761	118U3761
Receiver		118U3475	118U3475	118U3475	118U3475	118U3475	118U3475	118U3475	118U3475	118U3476
Sight glass		014L0173	014L0173	014L0173	014L0173	014L0173	014L0173	014L0173	014L0173	014L0173
Suction valve		118U3762	118U3762	118U3762	118U3762	118U3762	118U3762	118U3762	118U3762	118U3763
Electrical Spare Parts										
Crankcase heater		120Z5040	120Z5040	120Z5040	120Z5040	120Z5040	120Z5040	120Z5040	120Z5040	120Z5040
Contactor kit		118U3867	118U3893	118U3867	118U3894	118U3867	118U3894	118U3895	118U3894	118U3895
Main switch kit	W05	118U3869	118U3872	118U3870	118U3873	118U3870	118U3873	118U3870	118U3873	118U3871
Overload relay		118U3879	118U3875	118U3880	118U3876	118U3880	118U3876	118U3880	118U3877	118U3880
Run capacitor		8173231	-	120Z0051	-	120Z0051	-	120Z0051	-	8173233
Starting capacitor		120Z0399	-	120Z0399	-	120Z0399	-	120Z0399	-	120Z0400
Starting relay		120Z0393	-	120Z0393	-	120Z0393	-	120Z0393	-	120Z0394
Sequence phase relay		118U3882	118U3882	118U3882	118U3882	118U3882	118U3882	118U3882	118U3882	118U3882
Electrical Characteristics										
Wiring Diagram	W05	WD2	WD5	WD2	WD5	WD2	WD5	WD2	WD5	WD3
LRA Compressor [A]		60	30	97	45	97	45	97	45	127
MCC Compressor [A]		19	7	23	9.5	25	9.5	26	10	32
Max cont.power [kW]		2.53	2.73	3.38	3.33	3.38	3.33	4.42	4.14	4.89
MCC Fan [A]		0.47	0.47	0.47	0.47	0.47	0.47	0.47	0.47	0.97
Fan Power [W]		1x68	1x68	1x68	1x68	1x68	1x68	1x68	1x68	1x130
Min Fuse rating gL/gG (A)		25	10	32	16	32	16	32	16	40
Accessories (Not Premounted)										
Acoustic hood		120Z5043	120Z5043	120Z5043	120Z5043	120Z5043	120Z5043	120Z5043	120Z5043	120Z5044
Discharge Gas thermostat		7750009	7750009	7750009	7750009	7750009	7750009	7750009	7750009	7750009
Fusible plug		118U5170	118U5170	118U5170	118U5170	118U5170	118U5170	118U5170	118U5170	118U5170
Sheet Metal										
Top panel		118U5146	118U5146	118U5146	118U5146	118U5146	118U5146	118U5146	118U5146	118U5151
Fan panel		118U5147	118U5147	118U5147	118U5147	118U5147	118U5147	118U5147	118U5147	118U5152
Back panel		118U5148	118U5148	118U5148	118U5148	118U5148	118U5148	118U5148	118U5148	118U5153
Left side panel		118U5168	118U5168	118U5168	118U5168	118U5168	118U5168	118U5168	118U5168	118U5169
Service panel	W05	118U5149	118U5149	118U5149	118U5149	118U5149	118U5149	118U5149	118U5149	118U5154

MCC - Max Continuous Current
LRA - Locked Rotor Amps

Designation		MSXM068ML	MSXM080ML	MSXM080ML	MSXM099ML	MSXM108ML	MSBM026AJ	MSBM034AJ	MSBM026AJ	MSBM034AJ	MSBM024AJ
Code Number	W05	114X7068	114X7069	114X7070	114X7071	114X7072	114X7083	114X7084	114X7093	114X7094	114X7097
Compressor Description		MLZ030T4	MLZ038T5	MLZ038T4	MLZ045T4	MLZ048T4	CAJ4517Z	CAJ4519Z	TAJ4517Z	TAJ4519Z	CAJ9513Z
Oil		215PZ-POE46	215PZ-POE46	215PZ-POE46	215PZ-POE46	215PZ-POE46	RL32HA/HT	RL32HA/HT	RL32HA/HT	RL32HA/HT	RL32HA/HT
Housing		B3	B3	B3	B3	B3	B2	B2	B2	B2	B2
Spare Parts											
Compressor single pack		121L8641	121L8647	121L8645	121L8649	121L8651	118U3993	118U3994	118U3991	118U3989	118U3995
Condenser		118U5219	118U5219	118U5219	118U5219	118U5219	118U5218	118U5218	118U5218	118U5218	118U5218
Dual pressure switch		060-539766	060-539766	060-539766	060-539766	060-539766	060-539766	060-539766	060-539766	060-539766	060-539766
Fan assembly		118U3829	118U3829	118U3829	118U3829	118U3829	-	-	-	-	-
Fan blade		-	-	-	-	-	118U3481	118U3481	118U3481	118U3481	118U3481
Fan capacitor		-	-	-	-	-	118U3297	118U3297	118U3297	118U3297	118U3297
Fan cowl/grill		118U3485	118U3485	118U3485	118U3485	118U3485	118U3484	118U3484	118U3484	118U3484	118U3484
Fan motor		118U3829	118U3829	118U3829	118U3829	118U3829	118U3823	118U3823	118U3823	118U3823	118U3823
Filter drier		023Z5044	023Z5044	023Z5044	023Z5044	023Z5044	023Z5041	023Z5041	023Z5041	023Z5041	023Z5041
Liquid valve		118U3761	118U3761	118U3761	118U3761	118U3761	118U3761	118U3761	118U3761	118U3761	118U3761
Receiver		118U3476	118U3476	118U3476	118U3476	118U3476	118U3475	118U3475	118U3475	118U3475	118U3475
Sight glass		014L0173	014L0173	014L0173	014L0173	014L0173	014L0173	014L0173	014L0173	014L0173	014L0173
Suction valve		118U3763	118U3763	118U3763	118U3763	118U3763	118U3761	118U3761	118U3761	118U3761	118U3761
Electrical Spare Parts											
Crankcase heater		120Z5040	120Z5040	120Z5040	120Z5040	120Z5040	118U0051	118U0051	118U0051	118U0051	120Z0057
Contactor kit		118U3896	118U3868	118U3896	118U3896	118U3896	118U3896	118U3896	118U3893	118U3893	118U3894
Main switch kit	W05	118U3873	118U3871	118U3874	118U3874	118U3874	118U3976	118U3976	118U3872	118U3872	118U3976
Overload relay		118U3877	118U3881	118U3878	118U3878	118U3878	118U3877	118U3878	118U3978	118U3978	118U3877
Run capacitor		-	8173234	-	-	-			-	-	
Starting capacitor		-	8173001	-	-	-	118U5195*	118U5196*	-	-	118U5198*
Starting relay		-	120Z0395	-	-	-			-	-	
Sequence phase relay		118U3882	118U3882	118U3882	118U3882	118U3882	-	-	-	-	-
Electrical Characteristics											
Wiring Diagram	W05	WD6	WD4	WD6	WD6	WD6	WD2	WD2	WD4	WD4	WD2
LRA Compressor [A]		60	130	70	82	87	38.5	45	18	22	33.5
MCC Compressor [A]		13	38	15	15	16	12.7	15.2	4	4.8	10.2
Max cont.power [kW]		4.88	5.77	5.78	7.01	7.55	2	2.74	2.09	2.7	1.75
MCC Fan [A]		0.97	0.97	0.97	0.97	0.97	0.47	0.47	0.47	0.47	0.47
Fan Power [W]		1x130	1x130	1x130	1x130	1x130	1x68	1x68	1x68	1x68	1x68
Min Fuse rating gL/gG (A)		16	40	20	20	20	16	16	10	10	16
Accessories (Not Premounted)											
Acoustic hood		120Z5044	120Z5044	120Z5044	120Z5044	120Z5044	-	-	-	-	-
Discharge Gas thermostat		7750009	7750009	7750009	7750009	7750009	7750009	7750009	7750009	7750009	7750009
Fusible plug		118U5170	118U5170	118U5170	118U5170	118U5170	118U5170	118U5170	118U5170	118U5170	118U5170
Sheet Metal											
Top panel		118U5151	118U5151	118U5151	118U5151	118U5151	118U5146	118U5146	118U5146	118U5146	118U5146
Fan panel		118U5152	118U5152	118U5152	118U5152	118U5152	118U5147	118U5147	118U5147	118U5147	118U5147
Back panel		118U5153	118U5153	118U5153	118U5153	118U5153	118U5148	118U5148	118U5148	118U5148	118U5148
Left side panel		118U5169	118U5169	118U5169	118U5169	118U5169	118U5168	118U5168	118U5168	118U5168	118U5168
Service panel	W05	118U5154	118U5154	118U5154	118U5154	118U5154	118U5149	118U5149	118U5149	118U5149	118U5149

MCC - Max Continuous Current
LRA - Locked Rotor Amps

Designation		MSGM012SC	MSGM015SC	MSGM018SC	MSGM021SC	MSGM026AJ	MSGM033AJ	MSYM009MY	MSYM012MP	MSYM014MP	MSBM018AJ
Code Number	W05	114X7099	114X7100	114X7101	114X7102	114X7103	114X7104	114X7108	114X7109	114X7110	114X7111
Compressor Description		SC12G	SC15G	SC18G	SC21G	CAJ4492Y	CAJ4511Y	MLY90RAb	MPT12RA	MPT14RA	CAJ9510Z
Oil		POE	POE	POE	POE	RL32HA/HT	RL32HA/HT	POE32	POE32	POE32	RL32HA/HT
Housing		B1	B1	B1	B1	B2	B2	B1	B1	B1	B2
Spare Parts											
Compressor single pack		195B0050	195B0053	195B0059	195B0636	118U3997	118U3996	123B2514	123B2518	123B2704	118U3988
Condenser		118U5217	118U5217	118U5217	118U5217	118U5218	118U5218	118U5217	118U5217	118U5217	118U5218
Dual pressure switch		060-539766	060-539766	060-539766	060-539766	060-539766	060-539766	060-539766	060-539766	060-539766	060-539766
Fan assembly		-	-	-	-	-	-	-	-	-	-
Fan blade		118U3480	118U3480	118U3480	118U3480	118U3481	118U3481	118U3480	118U3480	118U3480	118U3481
Fan capacitor		118U3296	118U3296	118U3296	118U3296	118U3297	118U3297	118U3296	118U3296	118U3296	118U3297
Fan cowl/grill		118U3483	118U3483	118U3483	118U3483	118U3484	118U3484	118U3483	118U3483	118U3483	118U3484
Fan motor		118U3477	118U3477	118U3477	118U3477	118U3823	118U3823	118U3477	118U3477	118U3477	118U3823
Filter drier		023Z5040	023Z5040	023Z5040	023Z5040	023Z5041	023Z5041	023Z5040	023Z5040	023Z5040	023Z5041
Liquid valve		118U3414	118U3414	118U3414	118U3414	118U3761	118U3761	118U3414	118U3414	118U3414	118U3761
Receiver		118U3474	118U3474	118U3474	118U3474	118U3475	118U3475	118U3474	118U3474	118U3474	118U3475
Sight glass		014L0182	014L0182	014L0182	014L0182	014L0173	014L0173	014L0182	014L0182	014L0182	014L0173
Suction valve		118U3414	118U3414	118U3414	118U3414	118U3761	118U3761	118U3414	118U3414	118U3414	118U3761
Electrical Spare Parts											
Crankcase heater		118U0051	118U0051	118U0051	118U0051	120Z0459	120Z0459	118U0051	118U0051	118U0051	118U3761
Contactor kit		118U3893	118U3893	118U3893	118U3893	118U3894	118U3894	118U3893	118U3893	118U3893	118U3894
Main switch kit	W05	118U3980	118U3980	118U3980	118U3980	118U3872	118U3872	118U3980	118U3975	118U3975	118U3975
Overload relay		118U3979	118U3979	118U3978	118U3978	118U3876	118U3876	118U3978	118U3876	118U3876	118U3876
Run capacitor		-	-	-				123B9222	123B9215	123B9226	
Starting capacitor		117U5017	117U5017	117U5017	117-7029*	118U5193*	118U5194*	123B9315	123B9315	123B9315	118U5197*
Starting relay		117U6003	117U6005	117U6019				123B9133	123B9151	123B9139	
Sequence phase relay		-	-	-	-	-	-	-	-	-	-
Electrical Characteristics											
Wiring Diagram	W05	WD1	WD1	WD1	WD7	WD1	WD2	WD7	WD7	WD7	WD2
LRA Compressor [A]		12.4	14.8	18.6	21.8	28	30	17	18.5	21	30
MCC Compressor [A]		3.17	3.88	4.34	4.6	8.9	8.6	5.3	5.3	6.5	8
Max cont.power [kW]		0.812	0.819	0.945	0.936	1.43	1.69	0.62	0.84	1.03	1.3
MCC Fan [A]		0.32	0.32	0.32	0.32	0.47	0.47	0.32	0.32	0.32	0.47
Fan Power [W]		1x25	1x25	1x25	1x25	1x68	1x68	1x25	1x25	1x25	1x68
Min Fuse rating gL/gG (A)		10	10	10	10	16	16	10	10	10	10
Accessories (Not Premounted)											
Acoustic hood		-	-	-	-	-	-	-	-	-	-
Discharge Gas thermostat		7750009	7750009	7750009	7750009	7750009	7750009	7750009	7750009	7750009	7750009
Fusible plug		118U5170	118U5170	118U5170	118U5170	118U5170	118U5170	118U5170	118U5170	118U5170	118U5170
Sheet Metal											
Top panel		118U5141	118U5141	118U5141	118U5141	118U5146	118U5146	118U5141	118U5141	118U5141	118U5146
Fan panel		118U5142	118U5142	118U5142	118U5142	118U5147	118U5147	118U5142	118U5142	118U5142	118U5147
Back panel		118U5143	118U5143	118U5143	118U5143	118U5148	118U5148	118U5143	118U5143	118U5143	118U5148
Left side panel		118U5167	118U5167	118U5167	118U5167	118U5168	118U5168	118U5167	118U5167	118U5167	118U5168
Service panel	W05	118U5144	118U5144	118U5144	118U5144	118U5149	118U5149	118U5144	118U5144	118U5144	118U5149

MCC - Max Continuous Current
LRA - Locked Rotor Amps

Component type	Component code	Component description	Additional informations
Acoustic Hood	120Z0575	ACOUSTIC HOOD COMP 1CYL	
Acoustic Hood	120Z5043	ACCOUSTIC HOOD - SMALL FRAME	
Acoustic Hood	120Z5044	Acoustic hood for Scroll MLZ compressor	
Acoustic Hood	120Z5045	ACCOUSTIC HOOD, LARGE FRAME	
Acoustic Hood	120Z5052	Sound Cover, LLZ013-018	
Capacitor	8173001	CAPACITOR 100µF 330V+R	
Capacitor	8173041	CAPACITOR 30µF 450V	
Capacitor	117U5017	START CAPACITOR 80 mfd	
Capacitor	117U5012	Start Capacitor 125 mF, 220V/50Hz	
Compressor Single Pack	118U3914	FH2511Z	
Compressor Single Pack	118U3915	TFH2511Z	
Compressor Single Pack	118U3988	CAJ9510Z - AJ2 range	
Compressor Single Pack	118U3989	TAJ4519Z - AJ2 range	
Compressor Single Pack	118U3990	CAJ2464Z - AJ2 range	
Compressor Single Pack	118U3991	TAJ4517Z - AJ2 range	
Compressor Single Pack	118U3992	CAJ2446Z - AJ2 range	
Compressor Single Pack	118U3993	CAJ4517Z - AJ2 range	
Compressor Single Pack	118U3994	CAJ4519Z - AJ2 range	
Compressor Single Pack	118U3995	CAJ9513Z - AJ2 range	
Compressor Single Pack	118U3996	CAJ4511Y - AJ2 range	
Compressor Single Pack	118U3997	CAJ4492Y - AJ2 range	
Compressor Single Pack	120F0226	NTZ048-4LR1B	
Compressor Single Pack	120F0228	NTZ048-5LR1B	
Compressor Single Pack	120F0230	NTZ068-4LR1B	
Compressor Single Pack	120F0232	NTZ068-5LR1B	
Compressor Single Pack	121L8629	MLZ015T4LP9A	
Compressor Single Pack	121L8631	MLZ015T5LP9A	
Compressor Single Pack	121U8731	MLZ019T5LT9A COMPRESSOR	
Compressor Single Pack	120U8725	MLZ019T4LP9A COMPRESSOR	
Compressor Single Pack	121L8633	MLZ021T4LP9A	
Compressor Single Pack	121L8635	MLZ021T5LP9A	
Compressor Single Pack	121L8637	MLZ026T4LP9A	
Compressor Single Pack	121L8639	MLZ026T5LP9A	
Compressor Single Pack	121L8641	MLZ030T4LC9A	
Compressor Single Pack	121L8643	MLZ030T5LC9A	
Compressor Single Pack	121L8645	MLZ038T4LC9A	
Compressor Single Pack	121L8647	MLZ038T5LC9A	
Compressor Single Pack	121L8649	MLZ045T4LC9A	
Compressor Single Pack	121L8651	MLZ048T4LC9A	
Compressor Single Pack	121L9535	LLZ013T4LQ9A	
Compressor Single Pack	121L9537	LLZ015T4LQ9A	
Compressor Single Pack	121L9539	LLZ018T4LQ9A	
Compressor Single Pack	123B2126	MPT14LA	
Compressor Single Pack	123B2127	MPT16LA	
Compressor Single Pack	123B2514	MLY90RAb	
Compressor Single Pack	123B2518	MPT12RA	
Compressor Single Pack	123B2704	MPT14RA	
Compressor Single Pack	195B0050	SC12G	
Compressor Single Pack	195B0053	SC15G	
Compressor Single Pack	195B0059	SC18G	
Compressor Single Pack	195B0636	SC21G	
Condenser	118U3492	Spare part, A7 MCHX	Phased out & replaced by 118U5217 from SN: -096147CG0419
Condenser	118U3493	Spare part, D7 MCHX	Phased out & replaced by 118U5218 from SN: -096147CG0419
Condenser	118U3494	Spare part, G7 MCHX	Phased out & replaced by 118U5219 from SN: -096147CG0419
Contactor kit	118U3867	KIT CONT,LC1E2501M6	
Contactor kit	118U3868	KIT CONT,LC1E3801M6	
Contactor kit	118U3893	KIT CONT,LC1E0901M5	
Contactor kit	118U3894	KIT CONT,LC1E1201M5	
Contactor kit	118U3895	KIT CONT,LC1E3201M5	
Contactor kit	118U3896	KIT CONT,LC1E1801M5	

Component type	Component code	Component description	Additional informations
Crankcase heater	120Z0057	Belt type, 50 W, 230 V, CE mark, UL	
Crankcase heater	120Z0459	PTC heater 27 W, CE mark, UL	
Crankcase heater	120Z5040	Belt type, 70 W, 240 V, CE mark, UL	
Crankcase heater	118U0051	CRANKCASE HEATER 55W	
Door Handle	118U3858	HANDLE, ABB-OHB2AJM,MSMN,OXS5X131	
Dual pressure switch	060-539766	KP17WB Pressure Switch M/24	
Fan assembly	118U3829	FAN ASSEMBLIES, EBM, ERP2015	
Fan blade	118U3480	FAN BLADE 14"	
Fan blade	118U3481	FAN BLADE 18"	
Fan capacitor	118U3296	CAPACITOR 1,8 µF	
Fan capacitor	118U3297	25PACITOR 3,5 µF	
Fan cowl/grill	118U3483	FAN GRILL HOUSING Ø356 mm	
Fan cowl/grill	118U3484	FAN GRILL HOUSING Ø457 mm	
Fan cowl/grill	118U3485	FAN GRILL HOUSING Ø609 mm	
Fan motor (Capacitor not included)	118U3477	FAN MOTOR 25W	
Fan motor (Capacitor not included)	118U3823	FAN MOTOR 68W	
Filter drier	023Z5040	DML083	
Filter drier	023Z5041	DML084	
Filter drier	023Z5044	DML164	
Liquid valve	118U3414	Brazed Service Valve 3/8"	
Liquid valve	118U3761	Brazed Service Valve 1/2"	
Main switch kit	118U3869	C60H2P25AC	
Main switch kit	118U3870	C60H2P32AC	
Main switch kit	118U3871	C60H2P40AC	
Main switch kit	118U3872	C60H4P10AC	
Main switch kit	118U3873	C60H4P16AC	
Main switch kit	118U3874	C60H4P20AC	
Main switch kit	118U3975	KIT CIRCUITBREAKER,C60H2P10A	
Main switch kit	118U3976	KIT CIRCUITBREAKER,C60H2P16A	
Main switch kit	118U3980	KIT CIRCUITBREAKER, -A9N2P06C	
Main switch kit	118U3851	KIT MPCB, ABB-MS116-10+HK1-20	
Main switch kit	118U3852	KIT MPCB, ABB-MS116-16+HK1-20	
Main switch kit	118U3853	KIT MPCB, ABB-MS116-6.3+HK1-20	
Main switch kit	118U3854	KIT MPCB, ABB-MS132-20+HK1-20	
Main switch kit	118U3855	KIT MPCB, ABB-MS132-25+HK1-20	
Main switch kit	118U3856	KIT MPCB, ABB-MS132-32+HK1-20	
Main switch kit	118U3857	KIT MPCB, ABB-MS450-40+HKS4-20	
Main switch kit	118U5162	SPARE PART, KIT MPCB MS116-4.0 2.5-4A	
Isolator switch	118U5117	SPARE PART, ISOLATOR SWITCH SHAFT ASSLY B1/B2	
Isolator switch	118U5120	SPARE PART, ISOLATOR SWITCH SHAFT ASSLY B3 3PH	
Isolator switch	118U5119	SPARE PART, ISOLATOR SWITCH SHAFT ASSLY B3 1PH	
Oil	-	POE32 for Light Commercial (MLY / MPT)	
Oil	-	RL32HA/HT for light Commercial (CAJ/FH/TAJ/TFH)	
Oil	120Z0638	1 litre can of 175PZ - POE (NTZ Platform)	CU with a SN above 051220CG3016
Oil	120Z0648	1 litre can of 215PZ - POE46 (MLZ & LLZ Platform)	CU with a SN above 051220CG3016
Overload relay	118U3875	KIT OL-RELAY, -LRE12+LAEB2	
Overload relay	118U3876	KIT OL-RELAY, -LRE14+LAEB2	
Overload relay	118U3877	KIT OL-RELAY, -LRE16+LAEB2	
Overload relay	118U3878	KIT OL-RELAY, -LRE21+LAEB2	
Overload relay	118U3879	KIT OL-RELAY, -LRE22+LAEB2	
Overload relay	118U3880	KIT OL-RELAY, -LRE32+LAEB2	
Overload relay	118U3881	KIT OL-RELAY, -LRE35+LAEB2	
Overload relay	118U3978	KIT OL-RELAY, -LRE1	
Receiver	118U3474	LIQUID RECEIVER 1,3 L	
Receiver	118U3475	LIQUID RECEIVER 3,4 L	
Receiver	118U3476	LIQUID RECEIVER 6,2 L	
Relay	8173022	STARTING RELAY TYPE RVA6AMKL	
Relay	117U6013	STARTING RELAY	
Relay	117U6019	Starting Relay SC 50/60 Hz	
Relay	117U6011	STARTING RELAY SC 220V/60Hz	
Relay	117-7027	SC-RELAY	
Relay	117U6003	STARTING RELAY TL/SC 115V/50/60Hz	
Relay	117U6005	STARTING RELAY SC 220V/50Hz	
Relay	117-7029	SC-RELAY	

Component type	Component code	Component description	Additional informations
Run capacitor	8173231	Run capacitor 440V, 40 µF	
Run capacitor	8173233	Run capacitor 440V,50 µF	
Run capacitor	8173234	Run capacitor 440V,55 µF	
Run capacitor	120Z0051	Run capacitor 70 µF	
Sequence phase relay	118U3882	SM500-MG73BF	
Sight glass	014L0173	SGP 12 N	
Sight glass	014L0182	SGP 10s N	
Suction valve	118U3761	SPARE PART - BRAZED SERVICE VALVE 1/2"	
Suction valve	118U3414	SPARE PART - BRAZED SERVICE VALVE 3/8"	
Suction valve	118U3762	SPARE PART VALVE- BRAZE SERVICE VALVE 3/4"	
Suction valve	118U3763	SPARE PART-BRAZE SERVICE VALVE 7/8"	
Suction valve	118U3764	SPARE PART-BRAZE SERVICE VALVE 5/8"	
Top Panel B1	118U5141	SPARE PART, SHEET METAL TOP B1	
Fan panel B1	118U5142	SPARE PART, SHEET METAL FAN B1	
Back Panel B1	118U5143	SPARE PART, SHEET METAL BACK B1	
Service panel W05 B1	118U5144	SPARE PART, SHEET METAL SERVICE PANEL B1	
Left Side Panel B1	118U5167	SPARE PART, SHEET METAL LEFT SIDE B1	
Top Panel B2	118U5146	SPARE PART, SHEET METAL TOP B2	
Fan panel B2	118U5147	SPARE PART, SHEET METAL FAN B2	
Back Panel B2	118U5148	SPARE PART, SHEET METAL BACK B2	
Service panel W05 B2	118U5149	SPARE PART, SHEET METAL SERVICE PANEL B2	
Left Side Panel B2	118U5168	SPARE PART, SHEET METAL LEFT SIDE B2	
Top Panel B3	118U5151	SPARE PART, SHEET METAL TOP B3	
Fan panel B3	118U5152	SPARE PART, SHEET METAL FAN B3	
Back Panel B3	118U5153	SPARE PART, SHEET METAL BACK B3	
Service panel W05 B3	118U5154	SPARE PART, SHEET METAL SERVICE PANEL B3	
Left Side Panel B3	118U5169	SPARE PART, SHEET METAL LEFT SIDE B3	
Starting KIT	118U5191	CAJ2446Z _ F1 KIT Capacitor and relay	
Starting KIT	118U5192	CAJ2464Z _ F1 KIT Capacitor and relay	
Starting KIT	118U5193	CAJ4492Y _ F1 KIT Capacitor and relay	
Starting KIT	118U5194	CAJ4511Y _ F1KIT Capacitor and relay	
Starting KIT	118U5195	CAJ4517Z _ F1 KIT Capacitor and relay	
Starting KIT	118U5196	CAJ4519Z _ F1 KIT Capacitor and relay	
Starting KIT	118U5197	CAJ9510Z _ F1 KIT Capacitor and relay	
Starting KIT	118U5198	CAJ9513Z _ F1KIT Capacitor and relay	
Starting KIT	118U5199	FH2511Z _ F1KIT Capacitor and relay	
Start capacitor	123B9316	STARTING CAPACITOR+CC 72-88µF/330V R216	
Start capacitor	123B9315	STARTING CAPACITOR+CC 64-77µF/330V R205	
Start capacitor	117U5373	START CAPACITOR 80 mfd	
Start capacitor	120Z0399	Start capacitor 145-175 F	
Relay	123B9151	RELAY + CON. BOARD 1158-8 BDG 158S+ NTC	
Relay	123B9133	RELAY + CON. BOARD 1149-8 BDG 149S+ NTC	
Run capacitor	123B9222	RUN CAPACITOR 10µF/420V, REF. 326	
Run capacitor	123B9219	RUN CAPACITOR 16µF/420V, REF. 321	
Capacitor	120Z0400	CAPACITOR 161-193µF 330V	
Start relay	120Z0393	Starting relay RVA9CKL	
Start relay	120Z0394	Starting relay RVA3EKL	
Start relay	120Z0395	Starting relay RVA4GKL	
Relay	123B9139	RELAY + CON. BOARD 1166-8 BDG 166S+ NTC	
Run capacitor	123B9226	RUN CAPACITOR 25µF/420V, REF. 310 MET.	

Housing B1

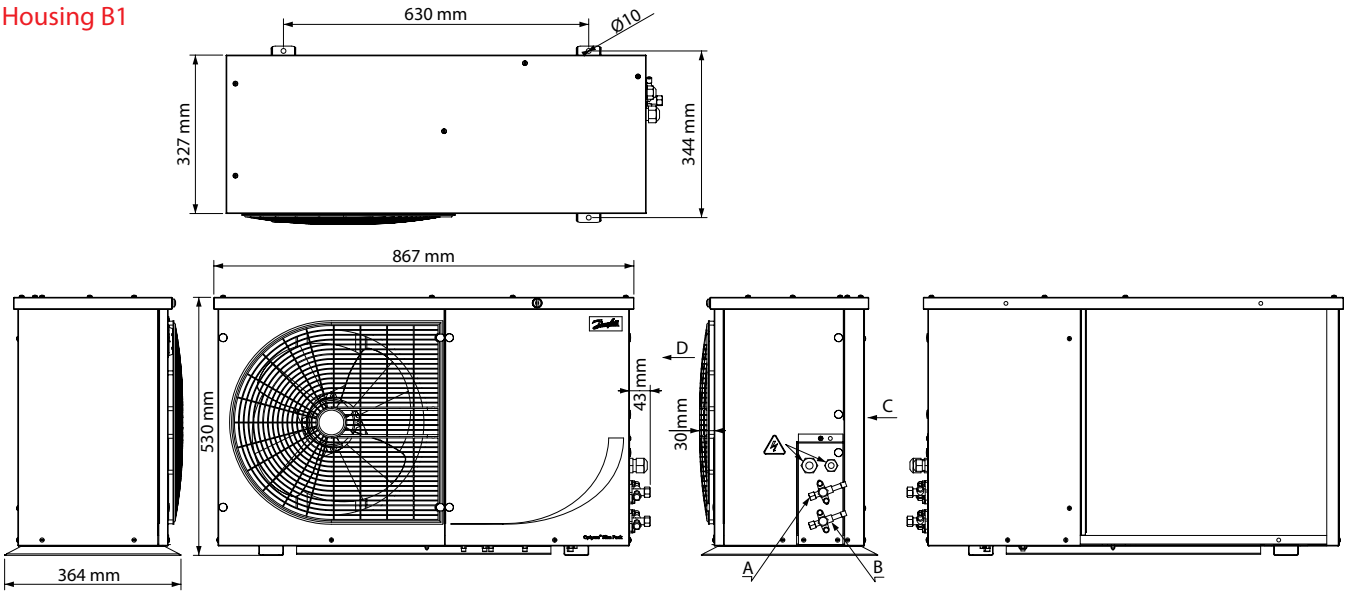

Dimensions are in (mm)

Housing B2

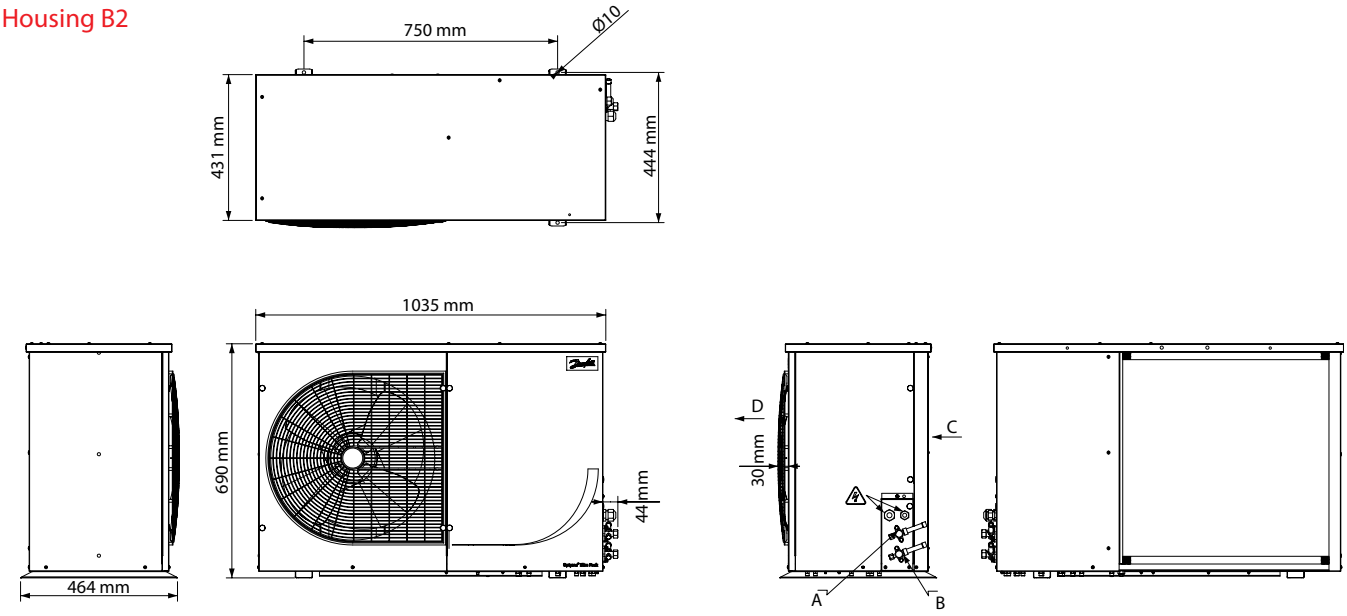

Dimensions are in (mm)

A Suction Flare Valve
B Liquid Flare Valve
C Air in
D Air out
⚠ Electrical Cables

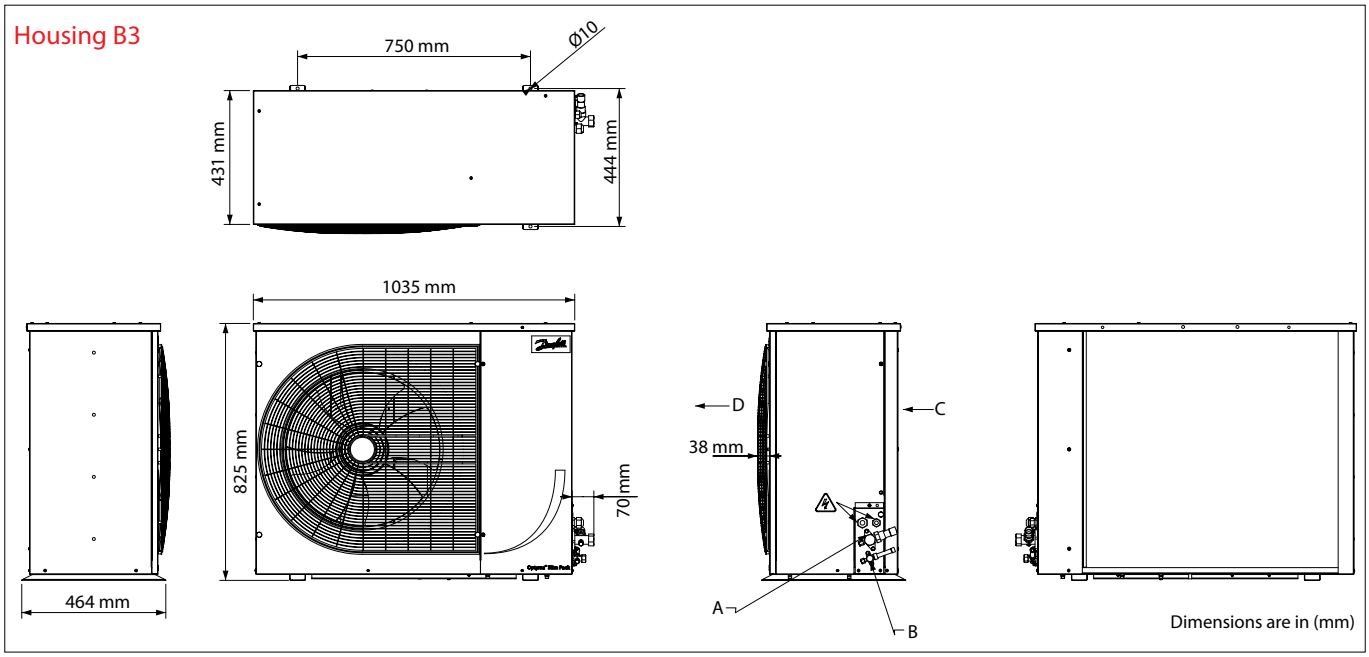

A Suction Flare Valve
B Liquid Flare Valve
C Air in
D Air out
⚠ Electrical Cables

Optyma™ Slim Pack - Housing spare parts

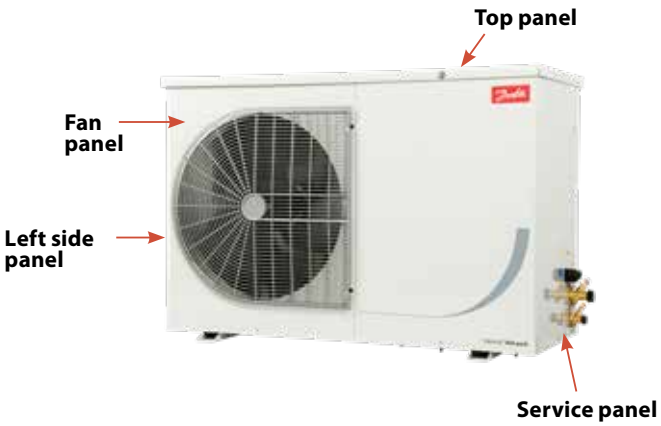

Code G (W05): OP-MSHM010 - 012 - 015, OP-LSHM015 - 018, OP-MSGM012 - 015 - 018 - 026

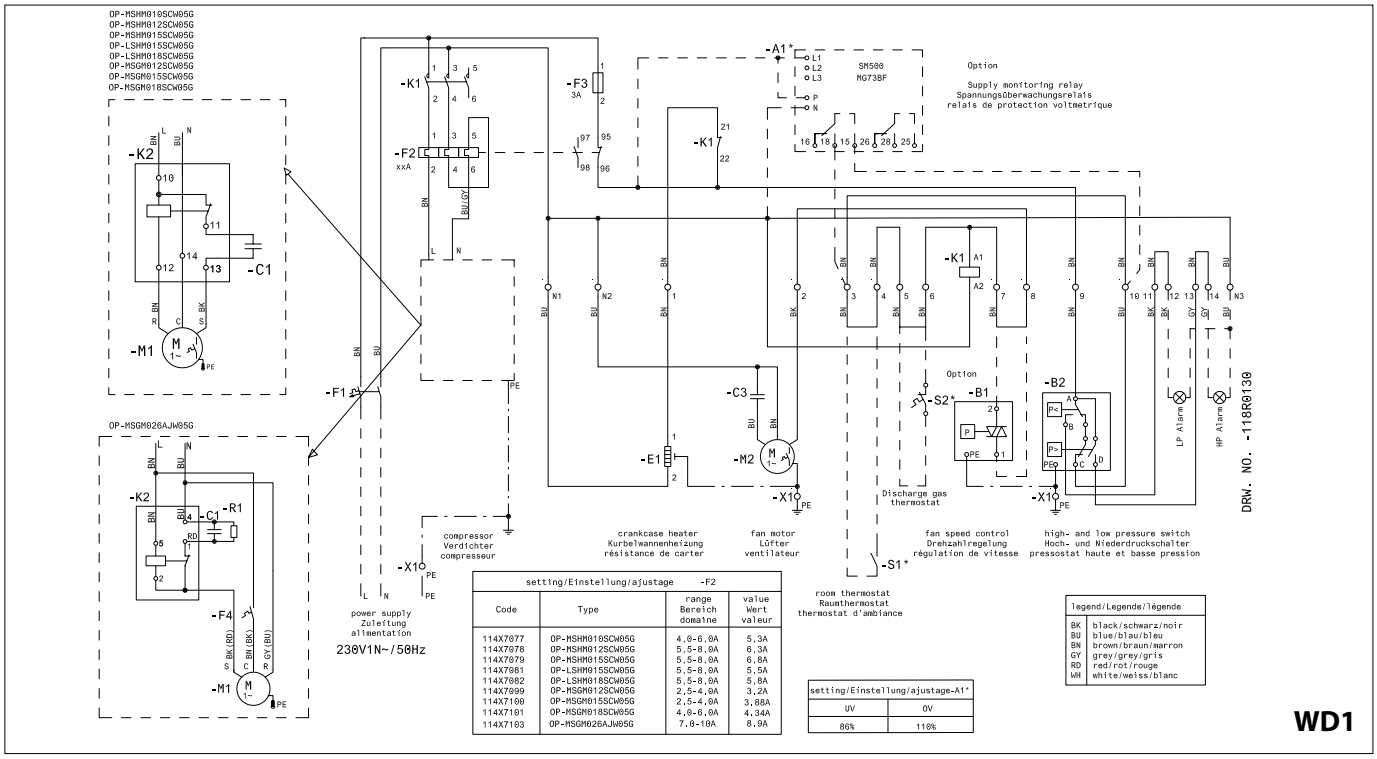

setting/Einstellung/ajustage -F2

Code	Type	range Bereich domaine	value Wert valeur
114X7077	OP-MSHM010SCW05G	4.0-6.0A	5.3A
114X7078	OP-MSHM012SCW05G	5.5-8.0A	6.3A
114X7079	OP-MSHM015SCW05G	5.5-8.0A	6.8A
114X7081	OP-LSHM015SCW05G	5.5-8.0A	5.5A
114X7082	OP-LSHM018SCW05G	5.5-8.0A	5.8A
114X7099	OP-MSGM012SCW05G	2.5-4.0A	3.2A
114X7100	OP-MSGM015SCW05G	2.5-4.0A	3.88A
114X7101	OP-MSGM018SCW05G	4.0-6.0A	4.34A
114X7103	OP-MSGM026AJW05G	7.0-10A	8.9A

setting/Einstellung/ajustage-A1*

UV	OV
86%	110%

legend/Legende/légende

BK	black/schwarz/noir
BU	blue/blau/bleu
BN	brown/braun/marron
GY	grey/grey/gris
RD	red/rot/rouge
WH	white/weiss/blanc

Code G (W05): OP-LSQM026 - 034 - 048 - 068 - 074, OP-MSGM033, OP-MSBM018 - 024 - 026 - 034, OP-MSXM034 - 044 - 46 - 057

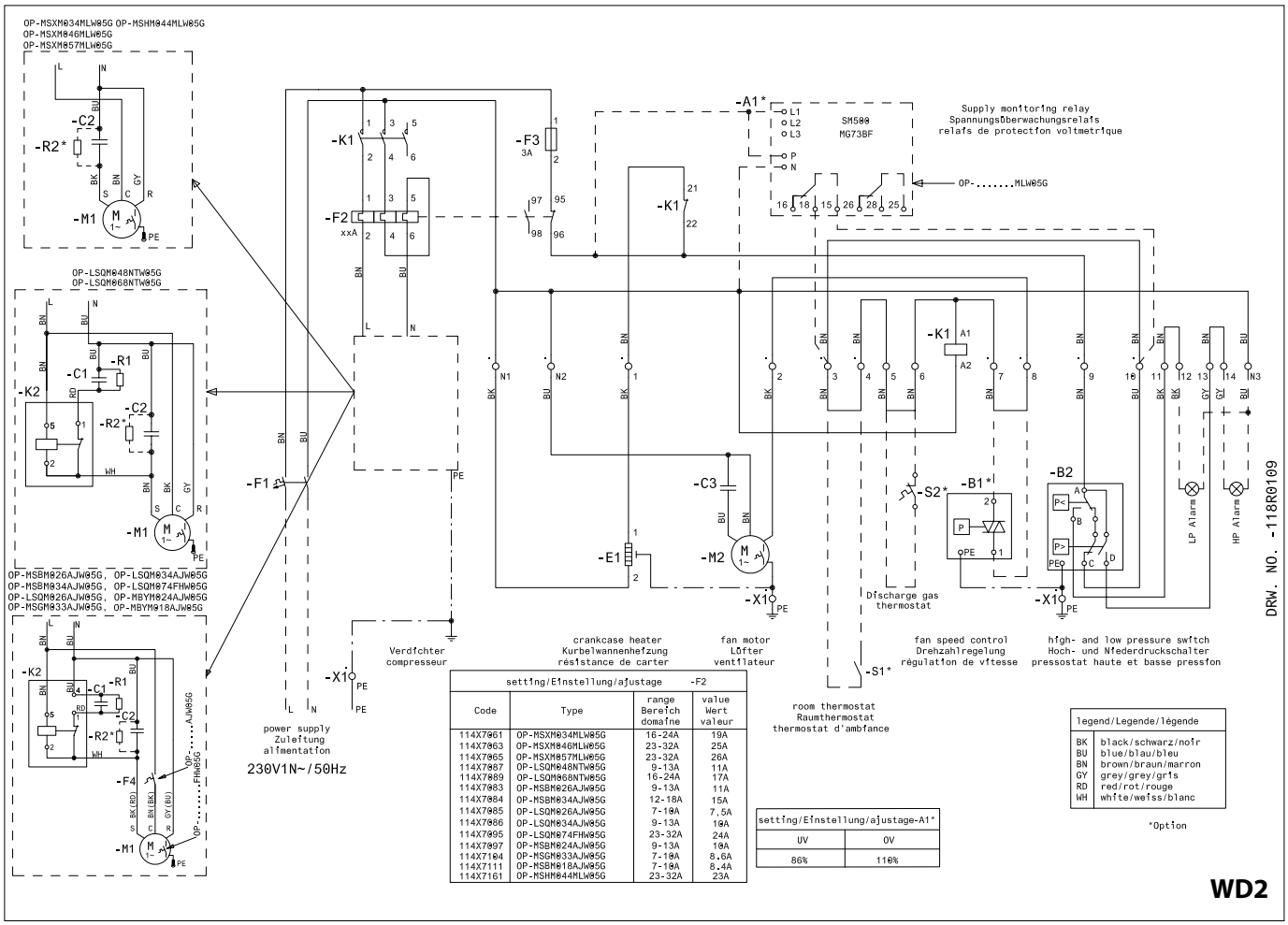

setting/Einstellung/ajustage -F2

Code	Type	range Bereich domaine	value Wert valeur
114X7061	OP-MSXM034MLW05G	16-24A	19A
114X7063	OP-MSXM046MLW05G	23-32A	25A
114X7065	OP-MSXM057MLW05G	23-32A	26A
114X7087	OP-LSQM048NTW05G	9-13A	11A
114X7089	OP-LSQM068NTW05G	16-24A	17A
114X7083	OP-MSBM026AJW05G	9-13A	11A
114X7084	OP-MSBM034AJW05G	12-18A	15A
114X7085	OP-LSQM026AJW05G	7-10A	7.5A
114X7086	OP-LSQM034AJW05G	9-13A	10A
114X7095	OP-LSQM074FHW05G	23-32A	24A
114X7097	OP-MSBM024AJW05G	9-13A	10A
114X7104	OP-MSGM033AJW05G	7-10A	8.6A
114X7111	OP-MSBM018AJW05G	7-10A	8.4A
114X7161	OP-MSHM044MLW05G	23-32A	23A

setting/Einstellung/ajustage-A1*

UV	OV
86%	110%

legend/Legende/légende

BK	black/schwarz/noir
BU	blue/blau/bleu
BN	brown/braun/marron
GY	grey/grey/gris
RD	red/rot/rouge
WH	white/weiss/blanc

*Option

Code G (W05): OP-MSXM068 - 080-093

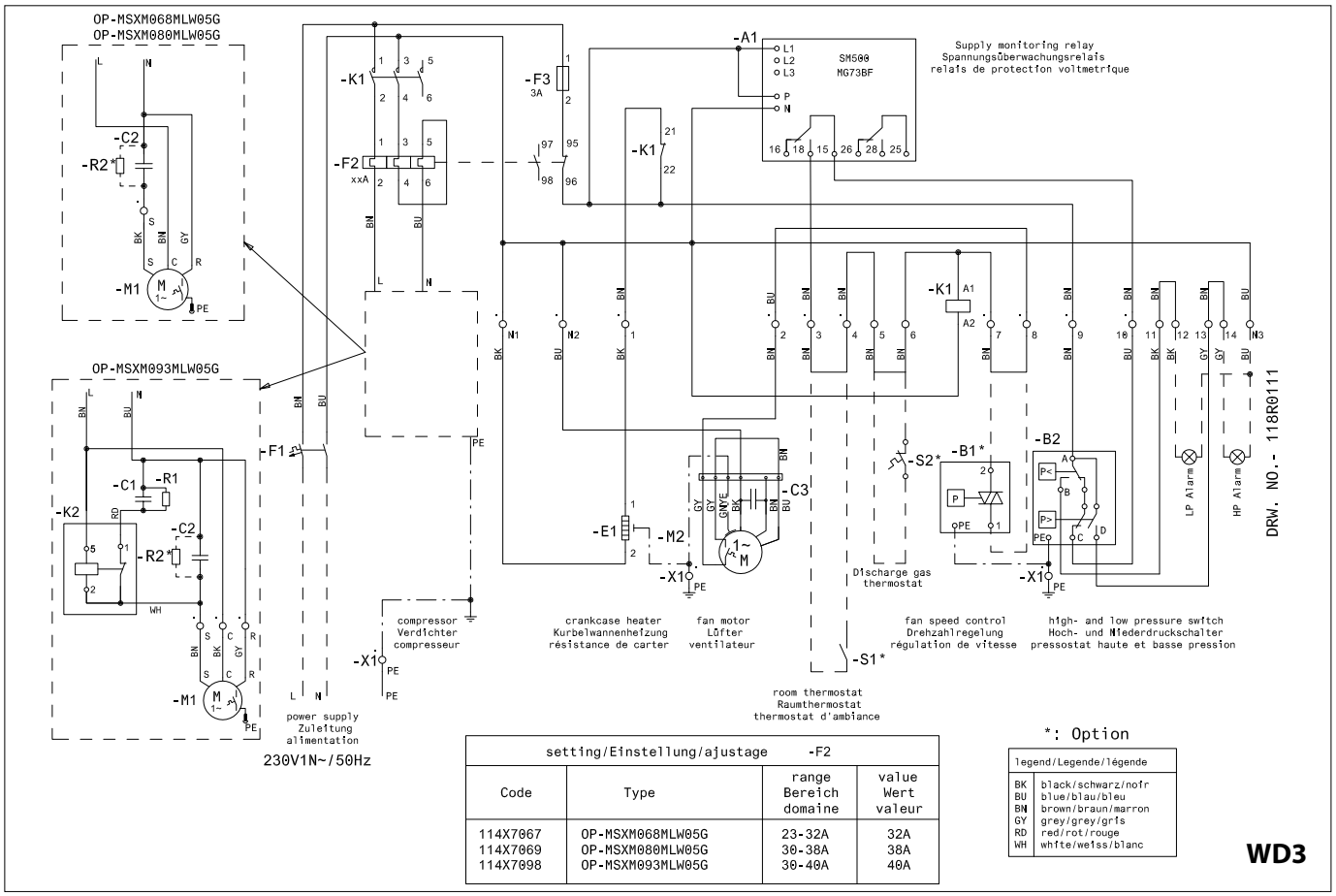

setting/Einstellung/ajustage -F2			
Code	Type	range Bereich domaine	value Wert valeur
114X7067	OP-MSXM068MLW05G	23-32A	32A
114X7069	OP-MSXM080MLW05G	30-38A	38A
114X7098	OP-MSXM093MLW05G	30-40A	40A

Code E (W05): OP-MSBM026-034

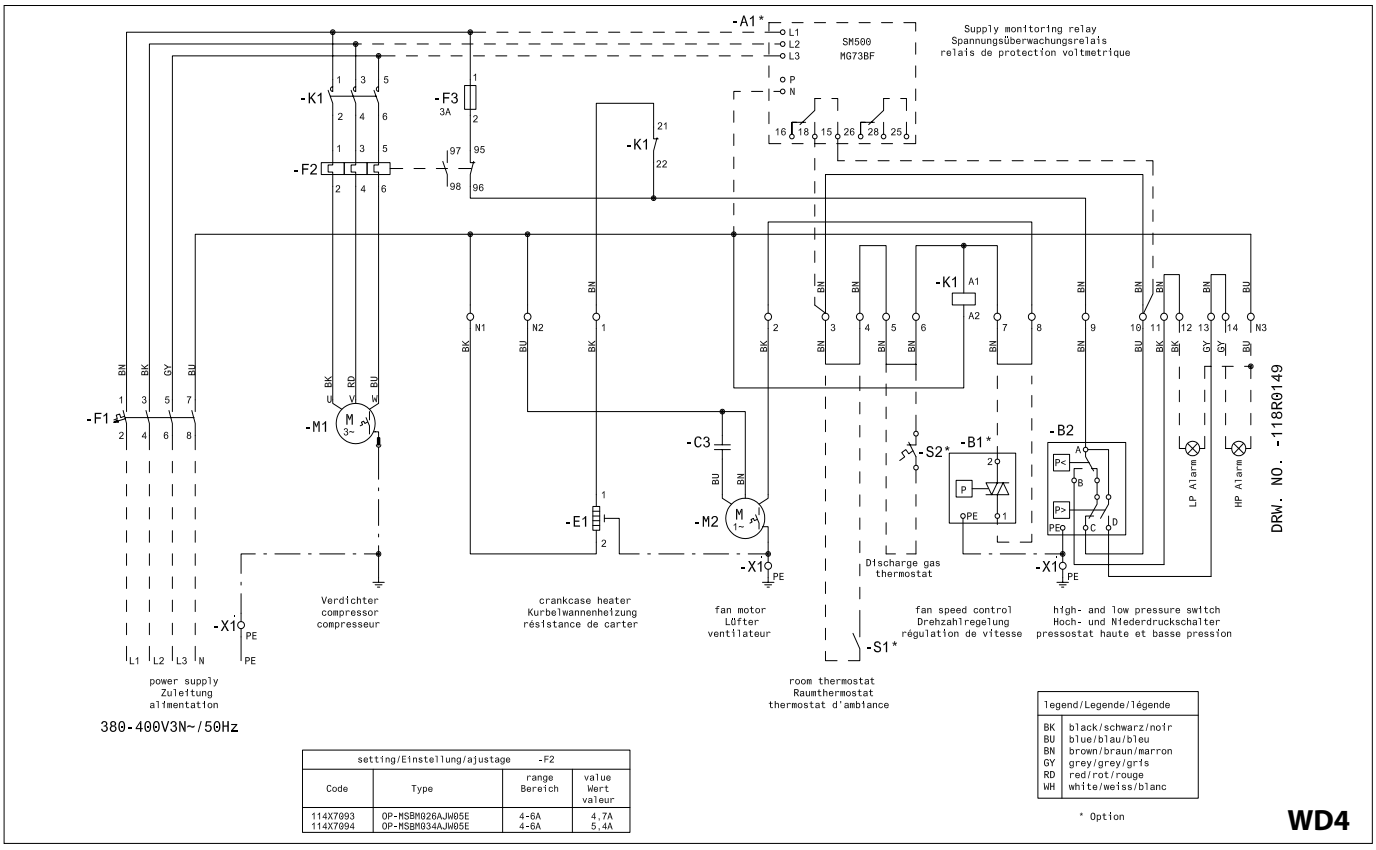

setting/Einstellung/ajustage -F2			
Code	Type	range Bereich	value Wert valeur
114X7093	OP-MSBM026AJW05E	4-6A	4,7A
114X7094	OP-MSBM034AJW05E	4-6A	5,4A

Code E (W05): OP-LSQM048 - 068 - 074, OP-MSXM034 - 044 - 046 - 057

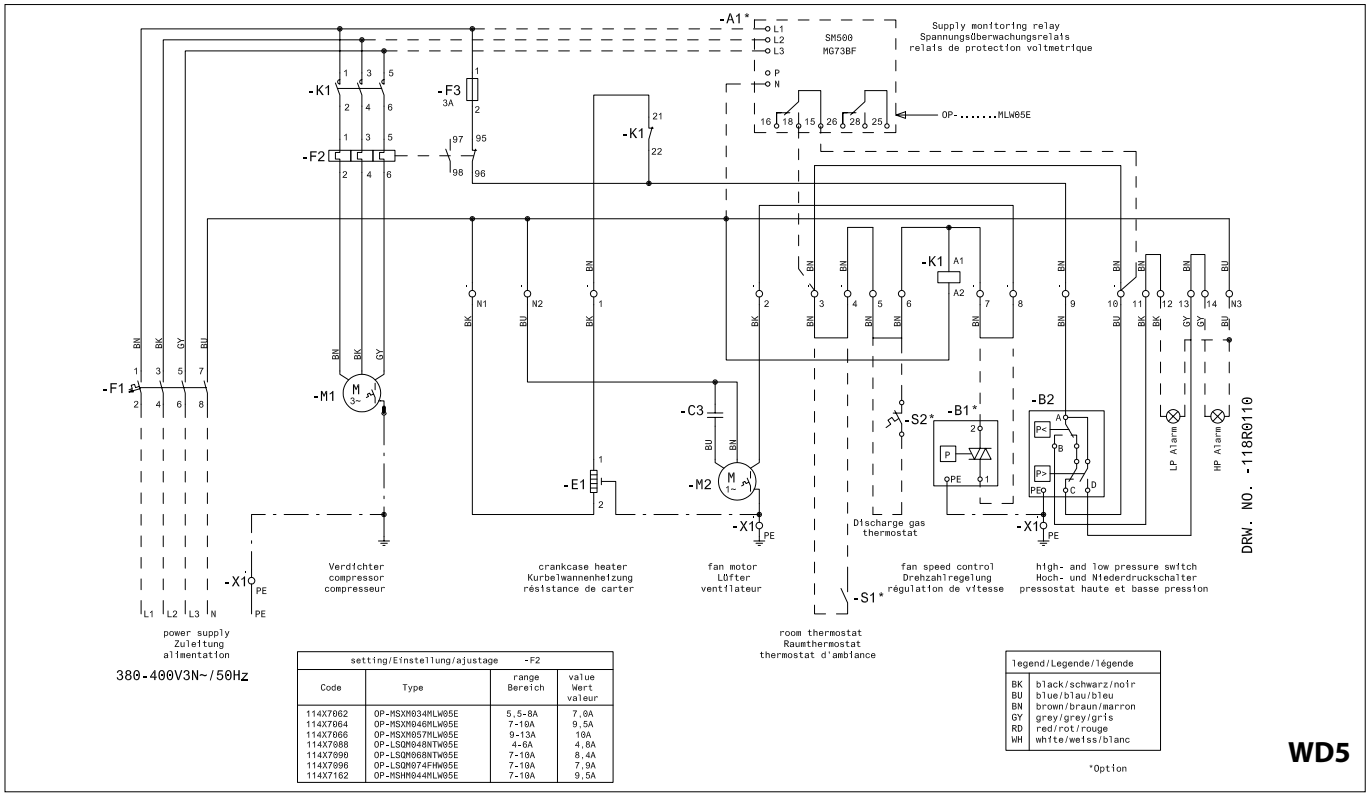

setting/Einstellung/ajustage -F2			
Code	Type	range Bereich	value Wert valeur
114X7062	OP-MSXM034MLW05E	5,5-8A	7,0A
114X7064	OP-MSXM046MLW05E	7-10A	9,5A
114X7066	OP-MSXM057MLW05E	9-13A	10A
114X7068	OP-LSQM048NTW05E	4-6A	4,8A
114X7090	OP-LSQM068NTW05E	7-10A	8,4A
114X7096	OP-LSQM074FHW05E	7-10A	7,9A
114X7162	OP-MSHM044MLW05E	7-10A	9,5A

legend/Legende/légende	
BK	black/schwarz/noir
BU	blue/blau/bleu
BN	brown/braun/marron
GY	grey/grey/gris
RD	red/rot/rouge
WH	white/weiss/blanc

*Option

WD5

Code E (W05) : OP-MSXM068 - 080 - 099 - 108, OP-LSQM067 - 084 - 098

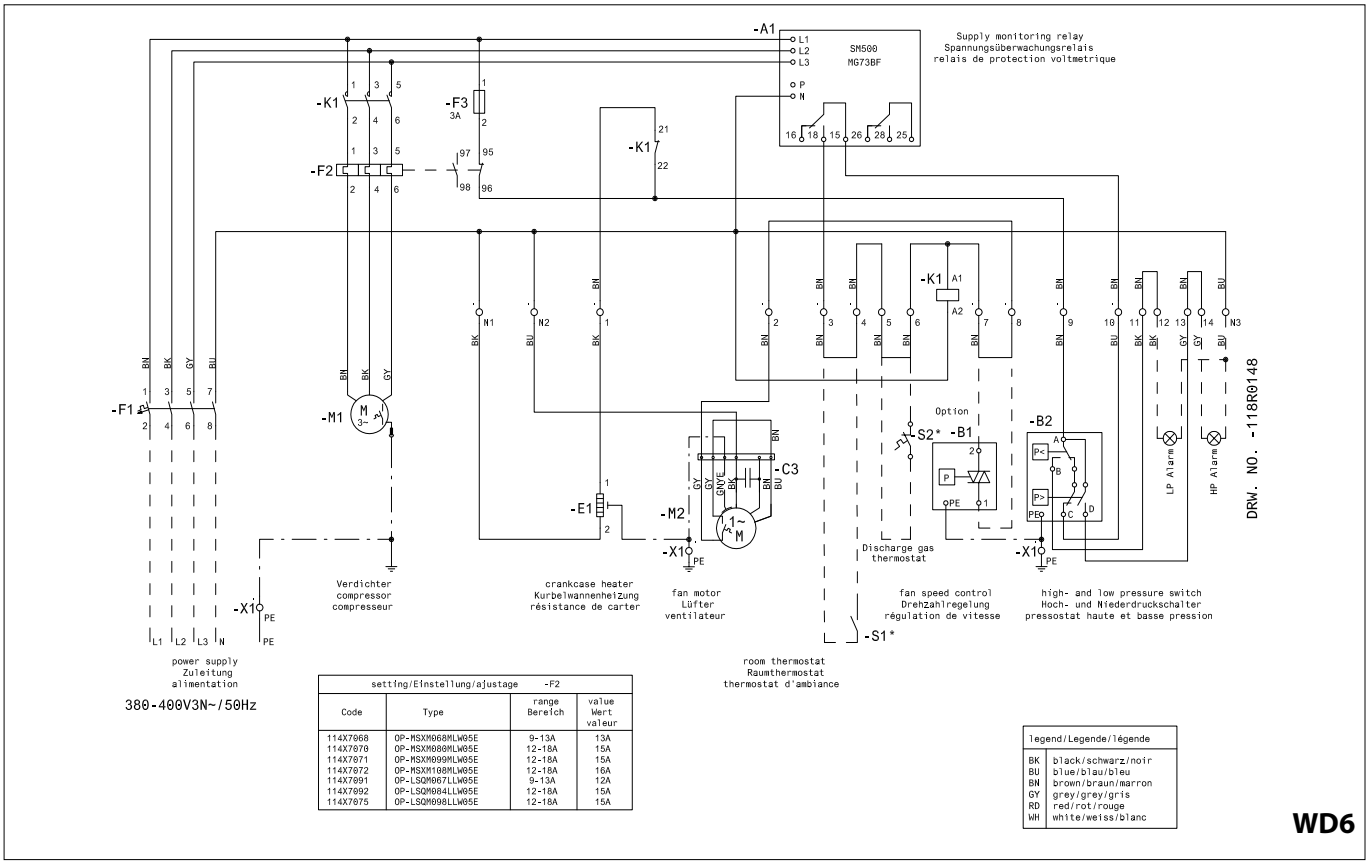

setting/Einstellung/ajustage -F2			
Code	Type	range Bereich	value Wert valeur
114X7068	OP-MSXM068MLW05E	9-13A	13A
114X7070	OP-MSXM080MLW05E	12-18A	15A
114X7071	OP-MSXM099MLW05E	12-18A	15A
114X7072	OP-MSXM108MLW05E	12-18A	16A
114X7091	OP-LSQM067LLW05E	9-13A	12A
114X7092	OP-LSQM084LLW05E	12-18A	15A
114X7075	OP-LSQM098LLW05E	12-18A	15A

legend/Legende/légende	
BK	black/schwarz/noir
BU	blue/blau/bleu
BN	brown/braun/marron
GY	grey/grey/gris
RD	red/rot/rouge
WH	white/weiss/blanc

WD6

Code G (W05): OP-MSYM009 - 012 - 014, OP-LSQM014 - 018, OP-MSHM018, OP-MSGM21

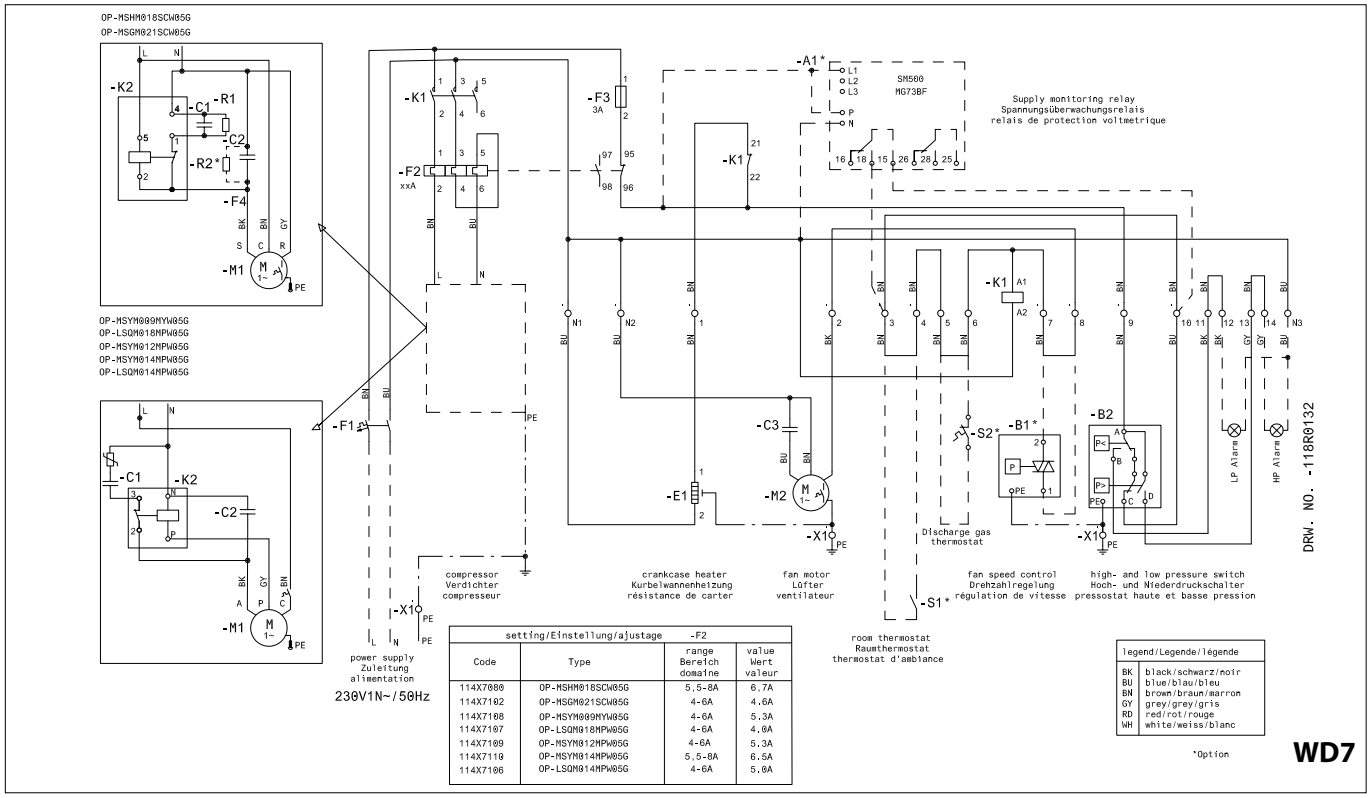

setting/Einstellung/ajustage -F2

Code	Type	range Bereich domaine	value Wert valeur
114X7000	OP-MSHM018SCW05G	5,5-8A	6,7A
114X7102	OP-MSGM021SCW05G	4-6A	4,6A
114X7108	OP-MSYM009MYW05G	4-6A	5,3A
114X7107	OP-LSQM018MPW05G	4-6A	4,0A
114X7109	OP-MSYM012MPW05G	4-6A	5,3A
114X7110	OP-MSYM014MPW05G	5,5-8A	6,5A
114X7106	OP-LSQM014MPW05G	4-6A	5,0A

BK	black	A1	Voltage relay	C3	Run capacitor fan	K2	Start relay
BU	blue	A1*	Voltage relay (option)	E1	Crankcase heater	M1	Compressor
BN	brown	B1	Fan speed controller	F1	Main switch	M2	Fan motor
GY	grey	B1*	Fan speed controller (option)	F2	Overload relay	R1,R2,R2*	Bleeder resistor
RD	red	B2	High and Low pressure switch	F3	Fuse control circuit	S1*	Room thermostat (option)
WH	white	C1	Start capacitor compressor	F4	Compressor thermal protector	X1	Terminals
		C2	Run capacitor compressor	K1	Contactor	*	Option (remove bridge)

Notes:

Optyma™ Plus
Equipped for **quietness** and **top performance**

The same robust quality with added technology and smarter design.
That's a seriously cool combination.

50%
less installation time. A fast fit that lets you keep up the tempo

Quick and safe installation and service

It is another step forward in plug and play. It will not just save you valuable time in installation, set up and service, it will also reduce your customers' bill.

High SEPR*

All models in the range are highly efficient and well above EcoDesign 2018 thresholds, contributing to a reduction in energy costs.
**SEPR: Seasonal Energy Performance Ratio.*

The best sound performance in the market

Due to its long-life compressor, acoustic insulation, component design as well as intelligent fan speed reduction during low capacity operation.

Connectivity

Contributes to considerable energy savings, making the Optyma™ **Plus** up to 20% more economical than an equivalent product.

High efficiency to the top

In-field stacking cuts costs
With its unique load-bearing design, it's possible to stack units in the field. This cuts installation time, and saves on carpentry and brackets to reduce cost.

Compact cabinet speeds installation
New compact design makes it easier to maneuver when fitting in tight spaces, saving installation time.

New MCHE alloy coils
New upgraded alloy with 1000 hours salt spray test

Accessibility to speed up service
Easier and quicker accessibility to all components with new double door design – saves time during servicing, maintenance and repair.

Intelligent technology speeds start-up and enhances reliability
Preset parameters make it easier to get it right from the start. Fewer mistakes reduce the risk of damage and save time and money on repairs.

P02: Scroll compressor with Liquid injection management for safety and reliability of installation using high glide refrigerants

High SEPR/COP **cuts energy costs**

E.g. in a cold room where frozen food is stored and with 4.2 kW of cooling capacity.

Optyma™ Plus LBP unit vs equivalent unit in the market*

Cooling cap.: 4.2 kW
Refrigerant: R452A

?

UNIT	Danfoss	Market
COP	1.08	0.97
USAGE	~ 25 820 kWh	~ 30 012 kWh

Annual energy consumption saved: 4 192 kWh

Savings based on cost of energy:

Savings based on cost of energy in the UK:
£0.13 / 1 KWH = 4 192 X 0.13 = £545

£545 annual electricity savings made by your customer in UK

* Source: Danfoss

Optyma™ Plus - Performance data R452A LBP

Model	Code	Version	Compressor	Electrical code (1)	Tamb [°C]	Cooling capacity Q [kW] (2) Te [°C] -40°C	-35°C	-30°C	-25°C	-20°C	-15°C	-10°C	EcoDesign (3) Q [kW]	P [kW]	COP	SEPR	Sound power level dB(A)	Sound pressure level 10 m dB(A)
OP-LPQM017MP	114X3118	P00	MPT16LA	G	27	-	0.443	0.583	0.735	0.897	1.070	1.253						
					32	-	0.396	0.522	0.661	0.810	0.971	1.142	0.441	0.465	0.95		60	29
					38	-	0.340	0.450	0.572	0.707	0.853	1.009						
					43	-	0.293	0.390	0.499	0.621	0.754	0.899						
OP-LPQM026AJ	114X3216	P00	CAJ2446Z	G	27	0.472	0.659	0.881	1.144	1.447	1.794	2.184						
					32	0.408	0.581	0.788	1.031	1.312	1.634	1.997	0.644	0.671	0.96		67	36
					38	-	0.489	0.675	0.894	1.148	1.439	1.769						
					43	-	0.414	0.582	0.780	1.010	1.275	1.577						
OP-LPQM048NT	114X3225	P00	NTZ048-5	G	27	0.771	1.090	1.478	1.931	2.446	3.018	3.641						
					32	0.655	0.948	1.303	1.718	2.191	2.717	3.291	1.053	0.950	1.11		69	38
					38	0.529	0.790	1.105	1.475	1.896	2.366	2.880						
					43	0.433	0.667	0.950	1.281	1.660	2.082	2.545						
OP-LPQM048NT	114X3233	P00	NTZ048-4	E	27	0.778	1.076	1.438	1.860	2.340	2.873	3.454						
					32	0.679	0.947	1.273	1.655	2.092	2.579	3.112	1.054	0.981	1.07		69	38
					38	0.572	0.805	1.089	1.424	1.809	2.241	2.716						
					43	0.491	0.695	0.945	1.242	1.584	1.969	2.396						
OP-LPQM068NT	114X3249	P00	NTZ068-4	E	27	1.001	1.415	1.897	2.442	3.044	3.695	4.384						
					32	0.841	1.221	1.664	2.166	2.722	3.324	3.964	1.362	1.390	0.98		70	39
					38	-	1.003	1.398	1.848	2.347	2.890	3.467						
					43	-	0.835	1.190	1.595	2.045	2.536	3.059						
OP-LPQM074FH	114X3252	P00	FH2511Z	G	27	1.062	1.511	2.037	2.641	3.324	4.085	4.919						
					32	0.889	1.310	1.801	2.365	3.003	3.713	4.492	1.458	1.539	0.95		69	38
					38	-	1.070	1.518	2.033	2.614	3.262	3.975						
					43	-	0.874	1.286	1.757	2.290	2.886	3.542						
OP-LPQM074FH	114X3253	P00	TFH2511Z	E	27	1.241	1.667	2.151	2.688	3.273	3.897	4.550						
					32	1.052	1.447	1.895	2.392	2.932	3.508	4.110	1.619	1.627	1.00		69	38
					38	0.833	1.192	1.597	2.045	2.530	3.047	3.586						
					43	0.659	0.987	1.355	1.762	2.201	2.668	3.153						
OP-LPQM068NT	114X3241	P00	NTZ068-5	G	27	1.215	1.655	2.158	2.712	3.299	3.898	4.484						
					32	1.056	1.459	1.918	2.421	2.952	3.491	4.014	1.632	1.404	1.16		70	39
					38	0.864	1.223	1.629	2.070	2.534	3.000	3.446						
					43	0.708	1.028	1.388	1.778	2.184	2.588	2.969						

This table continues on the next page

LBP

(1) G - Compressor 230V/1~/50Hz, fan 230V/1~/50Hz
E - Compressor 400V/3~/50Hz, fan 230V/1~/50Hz
(2) Nominal conditions (EN13215), Evaporating temperatures at dew point, Superheat 10K, Subcooling 0K
(3) Rated conditions (EN13215), Evaporating temperature (dew point) -35°C, Ambient air temperature +32°C, Return Gas Temperature 20°C, Subcooling 0K

SEPR, Seasonal Energy Performance Ratio
Q [kW], Cooling Capacity
P [kW], Power Input

For regular updates and detailed capacities, please refer to **Coolselector®2** software

Catalogue Optyma™ Plus - Performance data R452A LBP

Model	Code	Version	Compressor	Electrical code (1)	Tamb [°C]	Cooling capacity Q [kW] (2) Te [°C] -40°C	-35°C	-30°C	-25°C	-20°C	-15°C	-10°C	EcoDesign (3) Q [kW]	P [kW]	COP	SEPR	Sound power level dB(A)	Sound pressure level 10 m dB(A)
OP-LPOM067LL	114X3371	P02	LLZ013T4A	E	27	1.925	2.483	3.161	3.970	4.918	6.013	7.257					71	40
					32	1.794	2.306	2.929	3.675	4.553	5.571	6.733	2.692	2.200	1.34	1.74		
					38	1.642	2.096	2.651	3.318	4.108	5.030	6.089						
					43	1.519	1.922	2.418	3.017	3.731	4.570	5.541						
OP-LPOM084LL	114X3372	P02	LLZ015T4A	E	27	2.408	3.051	3.812	4.703	5.732	6.905	8.225					73	42
					32	2.223	2.820	3.526	4.351	5.306	6.398	7.630	3.290	2.741	1.29	1.70		
					38	1.997	2.533	3.167	3.909	4.771	5.761	6.884						
					43	1.803	2.286	2.856	3.526	4.306	5.206	6.234						
OP-LPOM098LL	114X3373	P02	LLZ018T4A	E	27	2.812	3.560	4.438	5.457	6.622	7.938	9.406					74	43
					32	2.592	3.286	4.098	5.039	6.118	7.339	8.704	3.840	3.214	1.27	1.70		
					38	2.318	2.943	3.671	4.516	5.486	6.588	7.824						
					43	2.084	2.647	3.302	4.062	4.937	5.935	7.061						
OP-LPOM120LL	114X3485	P02	LLZ024T4A	E	27	3.619	4.605	5.778	7.161	8.770	10.623	12.731					78	47
					32	3.345	4.266	5.360	6.650	8.154	9.889	11.869	4.964	3.961	1.39	1.88		
					38	3.005	3.841	4.834	6.005	7.376	8.963	10.784						
					43	2.712	3.472	4.374	5.442	6.696	8.155	9.837						
OP-LPOM168LL	114X3486	P02	LLZ034T4A	E	27	5.186	6.570	8.201	10.101	12.287	14.769	17.551					78	47
					32	4.780	6.066	7.578	9.340	11.369	13.678	16.274	7.077	5.521	1.38	1.84		
					38	4.278	5.437	6.798	8.385	10.217	12.310	14.673						
					43	3.847	4.893	6.120	7.553	9.214	11.119	13.281						

LBP
(1) E - Compressor 400V/3~/50Hz, fan 230V/1~/50Hz
(2) Nominal conditions (EN13215), Evaporating temperatures at mid point, Superheat 10K, Subcooling 0K
(3) Rated conditions (EN13215), Evaporating temperature (mid point) -35°C, Ambient air temperature +32°C, Return Gas Temperature 20°C, Subcooling 0K
O = R404A/R507, R452A, R448A,R449A

SEPR, Seasonal Energy Performance Ratio
Q [kW], Cooling Capacity
P [kW], Power Input

Optyma™ Plus - Performance data R404A/R507 LBP

Model	Code	Version	Compressor	Electrical code (1)	Tamb [°C]	Cooling capacity Q [kW] (2) Te [°C] -40°C	-35°C	-30°C	-25°C	-20°C	-15°C	-10°C	EcoDesign (3) Q [kW]	P [kW]	COP	SEPR	Sound power level dB(A)	Sound pressure level 10 m dB(A)
OP-LPQM017MP	114X3118	P00	MPT16LA	G	27	-	0.535	0.710	0.903	1.115	1.345	1.594						
					32	-	0.480	0.638	0.816	1.013	1.228	1.463	0.540	0.504	1.07		60	29
					38	-	0.413	0.553	0.712	0.890	1.088	1.305						
					43	-	0.359	0.483	0.626	0.789	0.971	1.173						
OP-LPQM026AJ	114X3216	P00	CAJ2446Z	G	27	0.526	0.732	0.978	1.268	1.606	1.993	2.432						
					32	0.455	0.645	0.872	1.140	1.451	1.809	2.216	0.724	0.715	1.01		67	36
					38	0.371	0.541	0.745	0.985	1.265	1.588	1.957						
					43	-	0.457	0.641	0.857	1.111	1.404	1.739						
OP-LPQM048NT	114X3225	P00	NTZ048-5	G	27	0.776	1.134	1.568	2.083	2.677	3.349	4.098						
					32	0.651	0.981	1.381	1.853	2.398	3.017	3.706	1.104	1.097	1.01		69	38
					38	0.501	0.798	1.155	1.576	2.062	2.615	3.232						
					43	0.381	0.647	0.968	1.345	1.782	-	-						
OP-LPQM048NT	114X3233	P00	NTZ048-4	E	27	0.783	1.143	1.572	2.072	2.645	3.290	4.007						
					32	0.670	1.000	1.392	1.849	2.371	2.960	3.615	1.126	0.997	1.13		69	38
					38	0.536	0.831	1.179	1.583	2.044	2.565	3.147						
					43	0.427	0.692	1.003	1.363	1.775	-	-						
OP-LPQM074FH	114X3253	P00	TFH2511Z	E	27	1.332	1.793	2.348	2.994	3.730	4.548	5.440						
					32	1.189	1.608	2.110	2.694	3.358	4.098	4.905	1.826	1.730	1.06		69	38
					38	1.017	1.388	1.828	2.338	2.918	3.564	4.270						
					43	0.873	1.205	1.594	2.044	2.554	-	-						
OP-LPQM074FH	114X3252	P00	FH2511Z	G	27	1.176	1.664	2.235	2.890	3.630	4.455	5.361						
					32	0.983	1.439	1.971	2.580	3.268	4.034	4.877	1.627	1.662	0.98		69	38
					38	0.756	1.172	1.655	2.207	2.831	3.526	4.292						
					43	0.573	0.955	1.395	1.899	2.468	3.102	3.803						
OP-LPQM068NT	114X3241	P00	NTZ068-5	G	27	1.177	1.670	2.254	2.931	3.695	4.543	5.468						
					32	0.985	1.434	1.969	2.588	3.291	4.074	4.931	1.620	1.514	1.07		70	39
					38	0.776	1.173	1.646	2.197	2.825	3.528	4.301						
					43	0.620	0.972	1.394	1.887	2.452	3.087	3.789						
OP-LPQM068NT	114X3249	P00	NTZ068-4	E	27	1.359	1.860	2.443	3.107	3.852	4.672	5.563						
					32	1.172	1.629	2.162	2.770	3.451	4.204	5.024	1.845	1.613	1.14		70	39
					38	0.967	1.374	1.846	2.386	2.991	3.662	4.394						
					43	0.812	1.177	1.599	2.081	2.623	-	-						

This table continues on the next page

LBP

(1) G - Compressor 230V/1~/50Hz, fan 230V/1~/50Hz
E - Compressor 400V/3~/50Hz, fan 230V/1~/50Hz

(2) Nominal conditions (EN13215), Evaporating temperatures at dew point, Superheat 10K, Subcooling 0K

(3) Rated conditions (EN13215), Evaporating temperature (dew point) -35°C, Ambient air temperature +32°C, Return Gas Temperature 20°C, Subcooling 0K

SEPR, Seasonal Energy Performance Ratio
Q [kW], Cooling Capacity
P [kW], Power Input

Model	Code	Version	Compressor	Electrical code (1)	Tamb [°C]	Cooling capacity Q [kW] (2) Te [°C] -40°C	-35°C	-30°C	-25°C	-20°C	-15°C	-10°C	EcoDesign (3) Q [kW]	P [kW]	COP	SEPR	Sound power level dB(A)	Sound pressure level 10 m dB(A)
OP-LPOM067LL	114X3371	P02	LLZ013T4A	E	27	2.210	2.823	3.547	4.391	5.365	6.476	7.732					71	40
					32	2.024	2.600	3.276	4.061	4.965	5.997	7.163	2.966	2.458	1.21	1.69		
					38	1.790	2.319	2.934	3.645	4.462	5.395	6.451						
					43	1.586	2.073	2.634	3.280	4.022	4.870	5.832						
OP-LPOM084LL	114X3372	P02	LLZ015T4A	E	27	2.654	3.375	4.240	5.261	6.444	7.795	9.317					73	42
					32	2.440	3.110	3.909	4.848	5.936	7.178	8.580	3.556	2.887	1.23	1.77		
					38	2.171	2.777	3.494	4.332	5.303	6.412	7.667						
					43	1.935	2.485	3.130	3.883	4.754	5.751	6.882						
OP-LPOM098LL	114X3373	P02	LLZ018T4A	E	27	3.089	3.920	4.914	6.079	7.421	8.944	10.647					74	43
					32	2.837	3.608	4.524	5.594	6.825	8.221	9.785	4.135	3.279	1.26	1.75		
					38	2.519	3.216	4.035	4.987	6.082	7.324	8.719						
					43	2.241	2.871	3.607	4.459	5.438	6.550	7.802						
OP-LPOM120LL	114X3485	P02	LLZ024T4A	E	27	3.997	5.083	6.389	7.930	9.719	11.763	14.068					78	47
					32	3.676	4.687	5.893	7.312	8.958	10.839	12.963	5.355	4.216	1.27	1.84		
					38	3.273	4.188	5.271	6.540	8.010	9.692	11.597						
					43	2.920	3.750	4.727	5.867	7.188	8.702	10.421						
OP-LPOM168LL	114X3486	P02	LLZ034T4A	E	27	5.429	6.821	8.466	10.379	12.568	15.038	17.788					78	47
					32	4.953	6.244	7.754	9.498	11.490	13.737	16.242	7.167	5.747	1.25	1.91		
					38	4.337	5.503	6.848	8.390	10.143	12.121	14.332						
					43	3.776	4.836	6.042	7.412	8.967	10.719	12.683						

LBP
(1) E - Compressor 400V/3~/50Hz, fan 230V/1~/50Hz
(2) Nominal conditions (EN13215), Evaporating temperatures at mid point, Superheat 10K, Subcooling 0K
(3) Rated conditions (EN13215), Evaporating temperature (mid point) -35°C, Ambient air temperature +32°C, Return Gas Temperature 20°C, Subcooling 0K
O = R404A/R507, R452A, R448A,R449A

SEPR, Seasonal Energy Performance Ratio
Q [kW], Cooling Capacity
P [kW], Power Input

Model	Code	Version	Compressor	Electrical code (1)	Tamb [°C]	Cooling capacity Q [kW] (2) Te [°C] -40°C	-35°C	-30°C	-25°C	-20°C	-15°C	-10°C	EcoDesign (3) Q [kW]	P [kW]	COP	SEPR	Sound power level dB(A)	Sound pressure level 10 m dB(A)
OP-LPOM067LL	114X3371	P02	LLZ013T4A	E	27	1.883	2.486	3.211	4.065	5.047	6.159	7.398					71	40
					32	1.787	2.344	3.017	3.810	4.725	5.763	6.922	2.688	2.391	1.12	1.6		
					38	1.681	2.179	2.783	3.499	4.329	5.274	6.334						
					43	1.605	2.047	2.589	3.237	3.992	4.857	5.831						
OP-LPOM084LL	114X3372	P02	LLZ015T4A	E	27	2.342	3.123	4.043	5.111	6.328	7.694	9.205					73	42
					32	2.207	2.942	3.806	4.804	5.942	7.218	8.632	3.382	2.947	1.15	1.64		
					38	2.049	2.726	3.517	4.429	5.468	6.635	7.929						
					43	1.921	2.545	3.272	4.110	5.064	6.137	7.330						
OP-LPOM098LL	114X3373	P02	LLZ018T4A	E	27	2.815	3.702	4.760	5.997	7.419	9.027	10.820					74	43
					32	2.658	3.493	4.485	5.644	6.975	8.482	10.165	4.002	3.256	1.23	1.75		
					38	2.471	3.241	4.152	5.214	6.435	7.818	9.366						
					43	2.315	3.028	3.869	4.849	5.975	7.253	8.687						
OP-LPOM120LL	114X3485	P02	LLZ024T4A	E	27	3.546	4.552	5.761	7.190	8.852	10.751	12.886					78	47
					32	3.342	4.291	5.420	6.750	8.294	10.058	12.044	4.886	4.058	1.20	1.65		
					38	3.080	3.957	4.990	6.199	7.601	9.202	11.006						
					43	2.842	3.659	4.610	5.718	6.999	8.463	10.114						
OP-LPOM168LL	114X3486	P02	LLZ034T4A	E	27	5.045	6.444	8.114	10.072	12.322	14.866	17.696					78	47
					32	4.770	6.075	7.628	9.447	11.537	13.903	16.538	6.908	5.324	1.30	1.81		
					38	4.432	5.615	7.021	8.665	10.559	12.705	15.102						
					43	4.142	5.218	6.494	7.988	9.712	11.670	13.864						

LBP
(1) E - Compressor 400V/3~/50Hz, fan 230V/1~/50Hz
(2) Nominal conditions (EN13215), Evaporating temperatures at mid point, Superheat 10K, Subcooling 0K
(3) Rated conditions (EN13215), Evaporating temperature (mid point) -35°C, Ambient air temperature +32°C, Return Gas Temperature 20°C, Subcooling 0K
O = R404A/R507, R452A, R448A,R449A

SEPR, Seasonal Energy Performance Ratio
Q [kW], Cooling Capacity
P [kW], Power Input

Optyma™ Plus - Performance data R134a MBP

Model	Code	Version	Compressor	Electrical code (1)	Tamb [°C]	Cooling capacity Q [kW] (2) Te [°C] -15°C	-10°C	-5°C	0°C	5°C	10°C	15°C	EcoDesign (3) Q [kW]	P [kW]	COP	SEPR	Sound power level dB(A)	Sound pressure level 10 m dB(A)
OP-MPGM033AJ	114X4220	P00	CAJ4511Y	G	27	1.444	1.835	2.280	2.786	3.353	3.984	4.678						
					32	1.326	1.699	2.122	2.601	3.138	3.736	4.394	1.740	0.849	2.05		67	36
					38	1.180	1.531	1.927	2.373	2.873	3.430	4.045						
					43	1.058	1.389	1.761	2.180	2.649	3.171	3.749						
OP-MPXM034ML	114X4264	P00	MLZ015T4	E	27	1.817	2.286	2.834	3.467	4.188	5.001	5.907						
					32	1.716	2.162	2.685	3.290	3.980	4.761	5.632	2.216	0.983	2.25		68	37
					38	1.597	2.012	2.502	3.071	3.723	4.462	5.290						
					43	1.499	1.886	2.346	2.883	3.502	4.205	4.995						
OP-MPXM034ML	114X4261	P00	MLZ015T5	G	27	1.822	2.321	2.883	3.513	4.218	5.003	5.876						
					32	1.711	2.189	2.730	3.339	4.023	4.788	5.639	2.244	1.033	2.17		68	37
					38	1.580	2.026	2.536	3.115	3.770	4.504	5.324						
					43	1.476	1.890	2.369	2.919	3.544	4.250	5.041						
OP-MPXM046ML	114X4284	P00	MLZ021T4	E	27	2.478	3.090	3.817	4.660	5.618	6.691	7.875						
					32	2.339	2.922	3.614	4.418	5.333	6.358	7.490	2.998	1.289	2.33		68	37
					38	2.167	2.713	3.363	4.118	4.979	5.945	7.014						
					43	2.021	2.535	3.147	3.860	4.674	5.591	6.606						
OP-MPXM046ML	114X4281	P00	MLZ021T5	G	27	2.465	3.114	3.854	4.690	5.626	6.665	7.811						
					32	2.317	2.933	3.641	4.446	5.350	6.358	7.473	3.010	1.451	2.07		68	37
					38	2.143	2.710	3.372	4.133	4.994	5.959	7.030						
					43	2.006	2.524	3.142	3.859	4.679	5.603	6.633						
OP-MPXM057ML	114X4293	P00	MLZ026T4	E	27	2.988	3.749	4.629	5.632	6.762	8.020	9.405						
					32	2.811	3.536	4.375	5.331	6.409	7.610	8.932	3.633	1.591	2.28		68	37
					38	2.596	3.276	4.062	4.959	5.972	7.101	8.346						
					43	2.416	3.055	3.795	4.641	5.596	6.664	7.843						
OP-MPXM057ML	114X4290	P00	MLZ026T5	G	27	2.981	3.762	4.649	5.647	6.760	7.991	9.345						
					32	2.805	3.540	4.384	5.339	6.409	7.597	8.905	3.639	1.914	1.90		68	37
					38	2.601	3.271	4.052	4.947	5.958	7.088	8.337						
					43	2.443	3.048	3.770	4.608	5.564	6.638	7.833						

MBP

This table continues on the next page

(1) G - Compressor 230V/1~/50Hz, fan 230V/1~/50Hz
E - Compressor 400V/3~/50Hz, fan 230V/1~/50Hz
(2) Nominal conditions (EN13215), Evaporating temperatures at dew point, Superheat 10K, Subcooling 0K
(3) Rated conditions (EN13215), Evaporating temperature (dew point) -10°C, Ambient air temperature +32°C, Return Gas Temperature 20°C, Subcooling 0K

SEPR, Seasonal Energy Performance Ratio
Q [kW], Cooling Capacity
P [kW], Power Input

Catalogue Optyma™ Plus - Performance data R134a MBP

Model	Code	Version	Compressor	Electrical code (1)	Tamb [°C]	Cooling capacity Q [kW] (2) Te [°C] -15°C	-10°C	-5°C	0°C	5°C	10°C	15°C	EcoDesign (3) Q [kW]	P [kW]	COP	SEPR	Sound power level dB(A)	Sound pressure level 10 m dB(A)
OP-MPXM068ML	114X4311	P00	MLZ030T4	E	27	3.686	4.631	5.738	7.016	8.470	10.104	11.920						
					32	3.484	4.382	5.437	6.657	8.048	9.614	11.357	4.493	1.897	2.37		69	38
					38	3.240	4.078	5.066	6.213	7.524	9.005	10.657						
					43	3.037	3.820	4.748	5.831	7.073	8.480	10.053						
OP-MPXM068ML	114X4308	P00	MLZ030T5	G	27	3.786	4.657	5.752	7.035	8.471	10.032	11.692						
					32	3.642	4.426	5.449	6.672	8.059	9.581	11.211	4.540	2.184	2.08		69	38
					38	3.479	4.146	5.072	6.214	7.534	9.001	10.586						
					43	3.356	3.915	4.751	5.817	7.073	8.487	10.029						
OP-MPXM080ML	114X4324	P00	MLZ038T4	E	27	4.283	5.388	6.667	8.129	9.782	11.630	13.673						
					32	4.029	5.086	6.307	7.704	9.282	11.048	13.001	5.220	2.308	2.26	3.43	69	38
					38	3.718	4.713	5.863	7.176	8.663	10.326	12.170						
					43	3.454	4.396	5.482	6.724	8.130	9.707	11.457						
OP-MPXM080ML	114X4321	P00	MLZ038T5	G	27	4.250	5.469	6.787	8.230	9.821	11.578	13.518						
					32	3.953	5.136	6.411	7.803	9.334	11.025	12.892	5.271	2.438	2.16	3.03	69	38
					38	3.566	4.705	5.926	7.255	8.715	10.327	12.107						
					43	3.225	4.325	5.500	6.776	8.176	9.721	11.429						
OP-MPXM108ML	114X4344	P00	MLZ048T4	E	27	5.637	7.050	8.708	10.601	12.721	15.056	17.592						
					32	5.298	6.641	8.223	10.033	12.062	14.299	16.730	6.819	2.840	2.40	3.74	75	44
					38	4.889	6.140	7.620	9.323	11.236	13.349	15.649						
					43	4.548	5.714	7.104	8.709	10.520	12.525	14.711						
OP-MPXM125ML	114X4414	P00	MLZ058T4	E	27	6.778	8.475	10.421	12.628	15.107	17.864	20.905						
					32	6.346	7.978	9.843	11.956	14.327	16.964	19.874	8.189	3.677	2.23	3.40	77	46
					38	5.815	7.364	9.130	11.125	13.363	15.853	18.604						
					43	5.363	6.841	8.519	10.414	12.539	14.904	17.519						
OP-MPXM162ML	114X4434	P00	MLZ076T4	E	27	8.698	10.884	13.393	16.234	19.416	22.943	26.820						
					32	8.169	10.246	12.638	15.353	18.399	21.782	25.505	10.523	4.681	2.25	3.46	77	46
					38	7.544	9.476	11.714	14.265	17.136	20.335	23.866						
					43	7.035	8.834	10.931	13.334	16.052	19.089	22.451						

MBP
(1) G - Compressor 230V/1~/50Hz, fan 230V/1~/50Hz
E - Compressor 400V/3~/50Hz, fan 230V/1~/50Hz
(2) Nominal conditions (EN13215), Evaporating temperatures at dew point, Superheat 10K, Subcooling 0K
(3) Rated conditions (EN13215), Evaporating temperature (dew point) -10°C, Ambient air temperature +32°C, Return Gas Temperature 20°C, Subcooling 0K
SEPR, Seasonal Energy Performance Ratio
Q [kW], Cooling Capacity
P [kW], Power Input

Optyma™ Plus - Performance data R513A MBP

Model	Code	Version	Compressor	Electrical code (1)	Tamb [°C]	Cooling capacity Q [kW] (2) Te [°C] -15°C	-10°C	-5°C	0°C	5°C	10°C	15°C	EcoDesign (3) Q [kW]	P [kW]	COP	SEPR	Sound power level dB(A)	Sound pressure level 10 m dB(A)
OP-MPGM033AJ	114X4220	P00	CAJ4511Y	G	27	1.520	1.910	2.357	2.861	3.424	4.045	4.722						
					32	1.392	1.759	2.177	2.649	3.176	3.758	4.394	1.829	0.901	2.03		67	36
					38	1.234	1.575	1.961	2.395	2.879	3.414	4.001						
					43	1.101	1.420	1.780	2.182	2.631	3.129	3.674						
OP-MPXM034ML	114X4264	P00	MLZ015T4	E	27	1.941	2.403	2.952	3.595	4.339	5.187	6.142						
					32	1.816	2.256	2.776	3.386	4.091	4.897	5.807	2.344	1.044	2.24		68	37
					38	1.665	2.075	2.560	3.128	3.786	4.540	5.394						
					43	1.538	1.922	2.376	2.907	3.524	4.234	5.041						
OP-MPXM034ML	114X4261	P00	MLZ015T5	G	27	1.918	2.378	2.926	3.570	4.318	5.173	6.138						
					32	1.801	2.238	2.756	3.365	4.071	4.880	5.796	2.326	1.063	2.19		68	37
					38	1.657	2.066	2.547	3.112	3.768	4.521	5.376						
					43	1.534	1.918	2.369	2.896	3.509	4.215	5.019						
OP-MPXM046ML	114X4284	P00	MLZ021T4	E	27	2.627	3.249	3.975	4.812	5.765	6.838	8.030						
					32	2.448	3.043	3.734	4.530	5.437	6.457	7.594	3.167	1.372	2.31		68	37
					38	2.227	2.786	3.434	4.179	5.027	5.984	7.053						
					43	2.037	2.565	3.174	3.875	4.674	5.577	6.588						
OP-MPXM046ML	114X4281	P00	MLZ021T5	G	27	2.553	3.167	3.887	4.720	5.671	6.744	7.938						
					32	2.390	2.978	3.664	4.455	5.359	6.379	7.516	3.101	1.572	1.97		68	37
					38	2.188	2.741	3.383	4.123	4.968	5.923	6.991						
					43	2.015	2.536	3.140	3.835	4.629	5.529	6.538						
OP-MPXM057ML	114X4293	P00	MLZ026T4	E	27	3.198	3.959	4.836	5.832	6.952	8.198	9.567						
					32	2.967	3.698	4.535	5.485	6.552	7.738	9.043	3.853	1.684	2.29		68	37
					38	2.678	3.369	4.157	5.049	6.050	7.162	8.389						
					43	2.430	3.085	3.829	4.669	5.613	6.663	7.823						
OP-MPXM057ML	114X4290	P00	MLZ026T5	G	27	3.139	3.884	4.748	5.736	6.852	8.095	9.463						
					32	2.936	3.648	4.469	5.406	6.462	7.639	8.937	3.803	1.859	2.05		68	37
					38	2.683	3.353	4.120	4.992	5.976	7.073	8.284						
					43	2.464	3.096	3.816	4.634	5.555	6.583	7.722						

MBP

This table continues on the next page

(1) G - Compressor 230V/1~/50Hz, fan 230V/1~/50Hz
E - Compressor 400V/3~/50Hz, fan 230V/1~/50Hz
(2) Nominal conditions (EN13215), Evaporating temperatures at dew point, Superheat 10K, Subcooling 0K
(3) Rated conditions (EN13215), Evaporating temperature (dew point) -10°C, Ambient air temperature +32°C, Return Gas Temperature 20°C, Subcooling 0K

SEPR, Seasonal Energy Performance Ratio
Q [kW], Cooling Capacity
P [kW], Power Input

Model	Code	Version	Compressor	Electrical code (1)	Tamb [°C]	Cooling capacity Q [kW] (2) Te [°C] -15°C	-10°C	-5°C	0°C	5°C	10°C	15°C	EcoDesign (3) Q [kW]	P [kW]	COP	SEPR	Sound power level dB(A)	Sound pressure level 10 m dB(A)
OP-MPXM068ML	114X4311	P00	MLZ030T4	E	27	3.996	4.933	6.037	7.321	8.796	10.469	12.343						
					32	3.750	4.646	5.697	6.918	8.321	9.913	11.700	4.830	1.951	2.48		69	38
					38	3.443	4.285	5.269	6.411	7.723	9.215	10.894						
					43	3.178	3.971	4.896	5.969	7.203	8.609	10.197						
OP-MPXM068ML	114X4308	P00	MLZ030T5	G	27	3.939	4.851	5.924	7.172	8.605	10.231	12.054						
					32	3.685	4.557	5.580	6.768	8.132	9.683	11.424	4.737	2.094	2.26		69	38
					38	3.369	4.189	5.147	6.260	7.539	8.995	10.636						
					43	3.098	3.870	4.772	5.819	7.024	8.399	9.953						
OP-MPXM080ML	114X4324	P00	MLZ038T4	E	27	4.678	5.758	7.025	8.494	10.173	12.069	14.184						
					32	4.380	5.410	6.614	8.007	9.600	11.400	13.412	5.627	2.217	2.54	3.82	69	38
					38	4.011	4.975	6.099	7.398	8.884	10.568	12.454						
					43	3.694	4.601	5.655	6.872	8.267	9.850	11.630						
OP-MPXM080ML	114X4321	P00	MLZ038T5	G	27	4.597	5.682	6.956	8.432	10.120	12.025	14.149						
					32	4.312	5.348	6.559	7.959	9.560	11.369	13.389	5.565	2.517	2.21	3.18	69	38
					38	3.957	4.930	6.062	7.369	8.862	10.553	12.446						
					43	3.650	4.568	5.631	6.857	8.259	9.849	11.635						
OP-MPXM108ML	114X4344	P00	MLZ048T4	E	27	6.082	7.496	9.139	11.024	13.160	15.548	18.187						
					32	5.659	7.007	8.569	10.359	12.387	14.658	17.173	7.300	3.095	2.36	3.73	75	44
					38	5.137	6.402	7.862	9.534	11.429	13.556	15.919						
					43	4.691	5.882	7.254	8.823	10.604	12.608	14.842						
OP-MPXM125ML	114X4414	P00	MLZ058T4	E	27	7.297	9.016	11.023	13.339	15.977	18.944	22.242						
					32	6.816	8.459	10.371	12.573	15.080	17.902	21.044	8.802	3.582	2.46	3.66	77	46
					38	6.216	7.763	9.554	11.613	13.958	16.602	19.552						
					43	5.700	7.160	8.845	10.781	12.986	15.478	18.266						
OP-MPXM162ML	114X4434	P00	MLZ076T4	E	27	8.919	11.065	13.551	16.392	19.595	23.158	27.073						
					32	8.289	10.331	12.687	15.374	18.402	21.774	25.487	10.765	5.060	2.13	3.15	77	46
					38	7.516	9.428	11.622	14.120	16.935	20.075	23.543						
					43	6.858	8.656	10.712	13.048	15.682	18.626	21.888						

MBP
(1) G - Compressor 230V/1~/50Hz, fan 230V/1~/50Hz
E - Compressor 400V/3~/50Hz, fan 230V/1~/50Hz
(2) Nominal conditions (EN13215), Evaporating temperatures at dew point, Superheat 10K, Subcooling 0K
(3) Rated conditions (EN13215), Evaporating temperature (dew point) -10°C, Ambient air temperature +32°C, Return Gas Temperature 20°C, Subcooling 0K
SEPR, Seasonal Energy Performance Ratio
Q [kW], Cooling Capacity
P [kW], Power Input

For regular updates and detailed capacities, please refer to **Coolselector®2** software

Catalogue Optyma™ Plus - Performance data R448A MBP

Model	Code	Version	Compressor	Electrical code (1)	Tamb [°C]	Cooling capacity Q [kW] (2) Te [°C] -20°C	-15°C	-10°C	-5°C	0°C	5°C	10°C	EcoDesign (3) Q [kW]	P [kW]	COP	SEPR	Sound power level dB(A)	Sound pressure level 10 m dB(A)
OP-MPXM034ML	114X4264	P00	MLZ015T4	E	27	2.372	2.942	3.595	4.338	5.175	6.110	7.142						
					32	2.193	2.731	3.348	4.050	4.843	5.729	6.711	3.409	1.647	2.07		68	37
					38	1.965	2.464	3.035	3.685	4.422	5.248	6.169						
					43	-	2.229	2.759	3.365	4.053	4.828	5.696						
OP-MPXM034ML	114X4261	P00	MLZ015T5	G	27	2.360	2.934	3.592	4.340	5.182	6.120	7.153						
					32	2.195	2.736	3.356	4.061	4.856	5.743	6.725	3.418	1.604	2.13		68	37
					38	1.992	2.491	3.063	3.715	4.451	5.277	6.194						
					43	-	2.283	2.812	3.416	4.102	4.875	5.737						
OP-MPXM046ML	114X4284	P00	MLZ021T4	E	27	3.178	3.933	4.791	5.759	6.840	8.035	9.343						
					32	2.930	3.640	4.446	5.355	6.372	7.499	8.738	4.535	2.237	2.03		68	37
					38	2.622	3.274	4.014	4.850	5.788	6.832	7.985						
					43	-	2.957	3.639	4.411	5.281	6.254	7.335						
OP-MPXM046ML	114X4281	P00	MLZ021T5	G	27	3.182	3.942	4.809	5.791	6.890	8.108	9.445						
					32	2.949	3.663	4.477	5.400	6.437	7.589	8.858	4.568	2.352	1.94		68	37
					38	2.665	3.318	4.065	4.914	5.871	6.941	8.127						
					43	-	3.025	3.713	4.496	5.384	6.382	7.495						
OP-MPXM057ML	114X4293	P00	MLZ026T4	E	27	3.811	4.724	5.742	6.868	8.104	9.450	10.901						
					32	3.473	4.333	5.289	6.345	7.506	8.770	10.138	5.406	2.940	1.84	3.15	68	37
					38	3.048	3.841	4.718	5.688	6.754	7.919	9.186						
					43	-	3.412	4.221	5.114	6.099	7.179	8.360						
OP-MPXM057ML	114X4290	P00	MLZ026T5	G	27	3.863	4.769	5.790	6.932	8.193	9.572	11.064						
					32	3.561	4.404	5.354	6.416	7.593	8.883	10.284	5.475	3.082	1.78	2.93	68	37
					38	3.185	3.945	4.803	5.766	6.836	8.016	9.306						
					43	-	3.548	4.323	5.197	6.175	7.260	8.454						
OP-MPXM068ML	114X4308	P00	MLZ030T5	G	27	4.812	5.958	7.265	8.744	10.404	12.248	14.278						
					32	4.447	5.529	6.761	8.157	9.726	11.473	13.403	6.890	3.266	2.11	3.30	69	38
					38	3.993	4.993	6.132	7.424	8.879	10.507	12.313						
					43	-	4.531	5.587	6.788	8.146	9.671	11.373						
OP-MPXM068ML	114X4311	P00	MLZ030T4	E	27	4.860	5.997	7.295	8.767	10.419	12.259	14.287						
					32	4.485	5.559	6.783	8.172	9.734	11.476	13.402	6.911	3.138	2.20	3.48	69	38
					38	4.012	5.003	6.134	7.418	8.867	10.490	12.292						
					43	-	4.516	5.564	6.758	8.109	9.629	11.326						
OP-MPXM080ML	114X4321	P00	MLZ038T5	G	27	5.554	6.850	8.310	9.943	11.753	13.739	15.900						
					32	5.167	6.388	7.759	9.290	10.988	12.855	14.891	7.919	3.985	1.99	3.07	69	38
					38	4.680	5.803	7.062	8.467	10.027	11.747	13.631						
					43	-	5.292	6.452	7.747	9.188	10.783	12.539						
OP-MPXM080ML	114X4324	P00	MLZ038T4	E	27	5.654	6.949	8.417	10.066	11.901	13.922	16.126						
					32	5.214	6.433	7.812	9.361	11.088	12.995	15.081	7.969	3.716	2.14	3.49	69	38
					38	4.667	5.786	7.053	8.479	10.073	11.838	13.779						
					43	-	5.227	6.395	7.714	9.192	10.836	12.654						
OP-MPXM108ML	114X4344	P00	MLZ048T4	E	27	7.357	9.067	10.997	13.154	15.541	18.156	20.992						
					32	6.775	8.377	10.182	12.201	14.439	16.897	19.572	10.403	5.300	1.96	3.31	75	44
					38	6.050	7.513	9.161	11.008	13.061	15.326	17.804						
					43	-	6.764	8.274	9.971	11.865	13.964	16.275						
OP-MPXM125ML	114X4414	P00	MLZ058T4	E	27	8.752	10.784	13.088	15.678	18.560	21.734	25.194						
					32	8.094	10.001	12.160	14.589	17.297	20.286	23.558	12.411	5.856	2.12	3.42	77	46
					38	7.274	9.018	10.993	13.220	15.711	18.474	21.514						
					43	-	8.166	9.979	12.030	14.333	16.901	19.744						
OP-MPXM162ML	114X4434	P00	MLZ076T4	E	27	10.583	13.218	16.207	19.567	23.303	27.413	31.890						
					32	9.654	12.132	14.943	18.105	21.627	25.514	29.760	15.258	7.988	1.91	3.13	77	46
					38	8.496	10.769	13.351	16.263	19.520	23.128	27.093						
					43	-	9.587	11.965	14.658	17.683	21.051	24.775						

MBP

(1) G - Compressor 230V/1~/50Hz, fan 230V/1~/50Hz
E - Compressor 400V/3~/50Hz, fan 230V/1~/50Hz
(2) Nominal conditions (EN13215), Evaporating temperatures at dew point, Superheat 10K, Subcooling 0K
(3) Rated conditions (EN13215), Evaporating temperature (dew point) -10°C, Ambient air temperature +32°C, Return Gas Temperature 20°C, Subcooling 0K

SEPR, Seasonal Energy Performance Ratio
Q [kW], Cooling Capacity
P [kW], Power Input

For regular updates and detailed capacities, please refer to **Coolselector®2** software

EcoDesign 2018

Optyma™ Plus - Performance data R449A MBP

Model	Code	Version	Compressor	Electrical code (1)	Tamb [°C]	Cooling capacity Q [kW] (2) Te [°C] -20°C	-15°C	-10°C	-5°C	0°C	5°C	10°C	EcoDesign (3) Q [kW]	P [kW]	COP	SEPR	Sound power level dB(A)	Sound pressure level 10 m dB(A)
OP-MPYM008MY	114X4119	P00	MLY80RAb	G	27	-	0.632	0.822	1.025	1.240	1.467	-						
					32	-	0.574	0.749	0.937	1.138	1.351	-	0.760	0.393	1.93		60	29
					38	-	0.504	0.661	0.831	1.015	1.211	-						
					43	-	0.447	0.588	0.744	0.913	1.095	-						
OP-MPYM009MY	114X4120	P00	MLY90RAb	G	27	-	0.668	0.878	1.098	1.327	1.566	-						
					32	-	0.609	0.801	1.004	1.217	1.441	-	0.813	0.430	1.89		61	30
					38	-	0.540	0.710	0.892	1.086	1.290	-						
					43	-	0.482	0.635	0.800	0.976	1.164	-						
OP-MPYM012MP	114X4121	P00	MPT12RA	G	27	-	0.930	1.198	1.478	1.768	2.067	-						
					32	-	0.848	1.095	1.353	1.623	1.902	-	1.112	0.589	1.89		63	32
					38	-	0.751	0.971	1.204	1.449	1.705	-						
					43	-	0.670	0.868	1.080	1.304	1.541	-						
OP-MPYM014MP	114X4122	P00	MPT14RA	G	27	-	0.978	1.251	1.544	1.859	2.193	-						
					32	-	0.896	1.147	1.421	1.716	2.032	-	1.166	0.729	1.60		60	29
					38	-	0.799	1.024	1.273	1.544	1.838	-						
					43	-	0.718	0.922	1.150	1.401	1.676	-						
OP-MPBM018AJ	114X4230	P00	CAJ9510Z	G	27	0.932	1.233	1.594	2.022	2.527	3.114	3.791						
					32	0.854	1.134	1.469	1.868	2.339	2.889	3.524	1.491	0.781	1.91		67	36
					38	-	1.015	1.321	1.685	2.117	2.622	3.209						
					43	-	0.916	1.199	1.535	1.934	2.404	2.950						
OP-MPBM024AJ	114X4200	P00	CAJ9513Z	G	27	1.153	1.549	2.021	2.577	3.222	3.960	4.796						
					32	1.041	1.409	1.847	2.363	2.964	3.655	4.439	1.876	0.902	2.08		67	36
					38	-	1.244	1.643	2.113	2.663	3.297	4.021						
					43	-	1.107	1.475	1.909	2.417	3.006	3.679						
OP-MPBM026AJ	114X4212	P00	CAJ4517Z	G	27	1.321	1.737	2.227	2.802	3.469	4.235	5.103						
					32	1.203	1.591	2.047	2.582	3.205	3.923	4.739	2.080	1.009	2.06		67	36
					38	-	1.416	1.833	2.323	2.894	3.554	4.309						
					43	-	1.271	1.657	2.109	2.638	3.252	3.956						
OP-MPBM026AJ	114X4213	P00	TAJ4517Z	E	27	1.298	1.730	2.233	2.819	3.495	4.268	5.144						
					32	1.169	1.575	2.048	2.597	3.232	3.960	4.785	2.081	1.059	1.97		67	36
					38	-	1.388	1.824	2.330	2.917	3.590	4.356						
					43	-	1.231	1.637	2.109	2.654	3.283	4.000						

MBP

This table continues on the next page

(1) G - Compressor 230V/1~/50Hz, fan 230V/1~/50Hz
E - Compressor 400V/3~/50Hz, fan 230V/1~/50Hz
(2) Nominal conditions (EN13215), Evaporating temperatures at dew point, Superheat 10K, Subcooling 0K
(3) Rated conditions (EN13215), Evaporating temperature (dew point) -10°C, Ambient air temperature +32°C, Return Gas Temperature 20°C, Subcooling 0K

SEPR, Seasonal Energy Performance Ratio
Q [kW], Cooling Capacity
P [kW], Power Input

For regular updates and detailed capacities, please refer to **Coolselector®2** software

Optyma™ Plus - Performance data R449A MBP

Model	Code	Version	Compressor	Electrical code (1)	Tamb [°C]	Cooling capacity Q [kW] (2) Te [°C] -20°C	-15°C	-10°C	-5°C	0°C	5°C	10°C	EcoDesign (3) Q [kW]	P [kW]	COP	SEPR	Sound power level dB(A)	Sound pressure level 10 m dB(A)
OP-MPBM034AJ	114X4227	P00	TAJ4519Z	E	27	1.657	2.175	2.778	3.474	4.273	5.179	6.195						
					32	1.510	1.997	2.561	3.213	3.962	4.812	5.768	2.606	1.346	1.94		67	36
					38	-	1.781	2.302	2.903	3.592	4.378	5.263						
					43	-	1.599	2.086	2.645	3.287	4.019	4.846						
OP-MPBM034AJ	114X4226	P00	CAJ4519Z	G	27	1.650	2.185	2.805	3.521	4.340	5.269	6.309						
					32	1.498	2.000	2.581	3.251	4.018	4.889	5.866	2.627	1.416	1.86		67	36
					38	-	1.776	2.310	2.925	3.630	4.431	5.333						
					43	-	1.588	2.083	2.652	3.306	4.050	4.889						
OP-MPXM034ML	114X4264	P00	MLZ015T4	E	27	2.367	2.937	3.590	4.334	5.172	6.108	7.142						
					32	2.187	2.726	3.343	4.046	4.839	5.727	6.711	3.409	1.647	2.07		68	37
					38	1.960	2.458	3.029	3.681	4.418	5.246	6.169						
					43	-	2.224	2.754	3.360	4.049	4.826	5.696						
OP-MPXM034ML	114X4261	P00	MLZ015T5	G	27	2.355	2.929	3.587	4.336	5.179	6.118	7.153						
					32	2.189	2.731	3.351	4.057	4.852	5.741	6.725	3.418	1.604	2.13		68	37
					38	1.987	2.486	3.058	3.710	4.447	5.274	6.194						
					43	-	2.277	2.807	3.412	4.098	4.872	5.737						
OP-MPXM046ML	114X4284	P00	MLZ021T4	E	27	3.171	3.926	4.785	5.753	6.835	8.032	9.343						
					32	2.923	3.633	4.439	5.349	6.367	7.497	8.738	4.535	2.237	2.03		68	37
					38	2.615	3.267	4.007	4.843	5.783	6.829	7.985						
					43	-	2.950	3.632	4.405	5.276	6.251	7.335						
OP-MPXM046ML	114X4281	P00	MLZ021T5	G	27	3.175	3.935	4.802	5.785	6.885	8.106	9.445						
					32	2.942	3.655	4.470	5.394	6.432	7.586	8.858	4.568	2.352	1.94		68	37
					38	2.657	3.311	4.058	4.908	5.866	6.938	8.127						
					43	-	3.018	3.705	4.490	5.379	6.379	7.495						
OP-MPXM057ML	114X4293	P00	MLZ026T4	E	27	3.803	4.716	5.734	6.861	8.099	9.446	10.901						
					32	3.464	4.325	5.281	6.338	7.500	8.767	10.138	5.406	2.940	1.84	3.15	68	37
					38	3.040	3.832	4.710	5.680	6.748	7.916	9.186						
					43	-	3.403	4.213	5.107	6.093	7.176	8.360						
OP-MPXM057ML	114X4290	P00	MLZ026T5	G	27	3.855	4.760	5.782	6.924	8.188	9.569	11.064						
					32	3.553	4.395	5.345	6.409	7.587	8.880	10.284	5.475	3.082	1.78	2.93	68	37
					38	3.176	3.936	4.795	5.758	6.830	8.013	9.306						
					43	-	3.539	4.315	5.190	6.169	7.257	8.454						

MBP

This table continues on the next page

(1) G - Compressor 230V/1~/50Hz, fan 230V/1~/50Hz
E - Compressor 400V/3~/50Hz, fan 230V/1~/50Hz
(2) Nominal conditions (EN13215), Evaporating temperatures at dew point, Superheat 10K, Subcooling 0K
(3) Rated conditions (EN13215), Evaporating temperature (dew point) -10°C, Ambient air temperature +32°C, Return Gas Temperature 20°C, Subcooling 0K

SEPR, Seasonal Energy Performance Ratio
Q [kW], Cooling Capacity
P [kW], Power Input

For regular updates and detailed capacities, please refer to **Coolselector®2** software

Model	Code	Version	Compressor	Electrical code (1)	Tamb [°C]	Cooling capacity Q [kW] (2) Te [°C] -20°C	-15°C	-10°C	-5°C	0°C	5°C	10°C	EcoDesign (3) Q [kW]	P [kW]	COP	SEPR	Sound power level dB(A)	Sound pressure level 10 m dB(A)
OP-MPXM068ML	114X4308	P00	MLZ030T5	G	27	4.802	5.948	7.255	8.735	10.397	12.244	14.278						
					32	4.436	5.518	6.751	8.148	9.719	11.469	13.403	6.890	3.266	2.11	3.30	69	38
					38	3.983	4.982	6.121	7.414	8.872	10.503	12.313						
					43	-	4.520	5.577	6.779	8.139	9.667	11.373						
OP-MPXM068ML	114X4311	P00	MLZ030T4	E	27	4.849	5.986	7.285	8.758	10.412	12.255	14.287						
					32	4.475	5.548	6.773	8.163	9.727	11.472	13.402	6.911	3.138	2.20	3.48	69	38
					38	4.001	4.992	6.123	7.409	8.860	10.486	12.292						
					43	-	4.505	5.553	6.748	8.102	9.625	11.326						
OP-MPXM080ML	114X4321	P00	MLZ038T5	G	27	5.542	6.838	8.298	9.933	11.744	13.735	15.900						
					32	5.155	6.375	7.747	9.279	10.980	12.850	14.891	7.919	3.985	1.99	3.07	69	38
					38	4.667	5.790	7.049	8.456	10.018	11.742	13.631						
					43	-	5.279	6.439	7.736	9.180	10.778	12.539						
OP-MPXM080ML	114X4324	P00	MLZ038T4	E	27	5.641	6.937	8.405	10.056	11.893	13.917	16.126						
					32	5.202	6.420	7.800	9.351	11.080	12.990	15.081	7.969	3.716	2.14	3.49	69	38
					38	4.654	5.774	7.041	8.469	10.064	11.833	13.779						
					43	-	5.214	6.383	7.703	9.183	10.832	12.654						
OP-MPXM108ML	114X4344	P00	MLZ048T4	E	27	7.341	9.051	10.981	13.140	15.530	18.149	20.992						
					32	6.758	8.360	10.166	12.187	14.428	16.891	19.572	10.403	5.300	1.96	3.31	75	44
					38	6.033	7.496	9.145	10.994	13.050	15.319	17.804						
					43	-	6.748	8.258	9.957	11.854	13.958	16.275						
OP-MPXM125ML	114X4414	P00	MLZ058T4	E	27	8.733	10.765	13.070	15.662	18.547	21.726	25.194						
					32	8.075	9.981	12.142	14.573	17.284	20.279	23.558	12.411	5.856	2.12	3.42	77	46
					38	7.255	8.998	10.974	13.204	15.698	18.466	21.514						
					43	-	8.146	9.960	12.013	14.320	16.893	19.744						
OP-MPXM162ML	114X4434	P00	MLZ076T4	E	27	10.560	13.195	16.185	19.547	23.287	27.404	31.890						
					32	9.631	12.108	14.920	18.084	21.611	25.504	29.760	15.258	7.988	1.91	3.13	77	46
					38	8.473	10.745	13.328	16.243	19.504	23.119	27.093						
					43	-	9.564	11.942	14.638	17.667	21.042	24.775						

MBP
(1) G - Compressor 230V/1~/50Hz, fan 230V/1~/50Hz
E - Compressor 400V/3~/50Hz, fan 230V/1~/50Hz
(2) Nominal conditions (EN13215), Evaporating temperatures at dew point, Superheat 10K, Subcooling 0K
(3) Rated conditions (EN13215), Evaporating temperature (dew point) -10°C, Ambient air temperature +32°C, Return Gas Temperature 20°C, Subcooling 0K
SEPR, Seasonal Energy Performance Ratio
Q [kW], Cooling Capacity
P [kW], Power Input

For regular updates and detailed capacities, please refer to **Coolselector®2** software

Optyma™ Plus - Performance data R452A MBP

Model	Code	Version	Compressor	Electrical code (1)	Tamb [°C]	Cooling capacity Q [kW] (2) Te [°C] -20°C	-15°C	-10°C	-5°C	0°C	5°C	10°C	EcoDesign (3) Q [kW]	P [kW]	COP	SEPR	Sound power level dB(A)	Sound pressure level 10 m dB(A)
OP-MPBM018AJ	114X4230	P00	CAJ9510Z	G	27	0.957	1.220	1.526	1.879	2.280	2.732	3.234						
					32	0.867	1.111	1.393	1.718	2.088	2.506	2.971	1.457	0.887	1.64		64	33
					38	0.758	0.978	1.231	1.523	1.856	2.233	2.654						
					43	0.665	0.866	1.095	1.359	1.660	-	-						
OP-MPBM024AJ	114X4200	P00	CAJ9513Z	G	27	1.194	1.550	1.962	2.434	2.967	3.559	4.210						
					32	1.069	1.398	1.778	2.213	2.704	3.253	3.856	1.858	1.018	1.83		64	33
					38	0.919	1.215	1.557	1.948	2.390	2.885	3.432						
					43	0.792	1.062	1.372	1.726	2.127	-	-						
OP-MPBM026AJ	114X4212	P00	CAJ4517Z	G	27	1.364	1.733	2.156	2.639	3.185	3.792	4.460						
					32	1.230	1.571	1.963	2.408	2.912	3.474	4.094	2.053	1.144	1.80		67	36
					38	1.068	1.377	1.729	2.129	2.583	3.090	3.652						
					43	0.932	1.214	1.533	1.895	2.306	-	-						
OP-MPBM026AJ	114X4213	P00	TAJ4517Z	E	27	1.331	1.717	2.155	2.649	3.204	3.819	4.494						
					32	1.186	1.547	1.954	2.413	2.927	3.498	4.126	2.044	1.200	1.70		67	36
					38	1.009	1.340	1.709	2.125	2.590	3.108	3.677						
					43	0.863	1.166	1.504	1.882	2.306	-	-						
OP-MPBM034AJ	114X4227	P00	TAJ4519Z	E	27	1.729	2.199	2.732	3.335	4.010	4.758	5.576						
					32	1.559	1.999	2.495	3.053	3.678	4.371	5.129	2.612	1.517	1.72		68	37
					38	1.352	1.754	2.204	2.710	3.275	3.901	4.587						
					43	1.174	1.545	1.957	2.418	2.932	-	-						
OP-MPBM034AJ	114X4226	P00	CAJ4519Z	G	27	1.723	2.213	2.768	3.393	4.093	4.868	5.713						
					32	1.549	2.006	2.520	3.099	3.746	4.461	5.244	2.639	1.589	1.66		68	37
					38	1.337	1.753	2.217	2.738	3.320	3.964	4.670						
					43	1.160	1.540	1.961	2.433	2.959	-	-						
OP-MPXM034ML	114X4264	P00	MLZ015T4	E	27	2.416	2.968	3.599	4.314	5.115	6.001	6.972						
					32	2.235	2.745	3.328	3.990	4.734	5.560	6.471	3.490	1.727	2.02		69	38
					38	2.013	2.470	2.995	3.591	4.264	5.017	5.854						
					43	1.823	2.235	2.708	3.248	3.861	-	-						
OP-MPXM034ML	114X4261	P00	MLZ015T5	G	27	2.435	2.988	3.622	4.341	5.145	6.036	7.014						
					32	2.250	2.762	3.350	4.017	4.767	5.602	6.521	3.512	1.744	2.01		69	38
					38	2.020	2.480	3.010	3.613	4.295	5.059	5.907						
					43	1.824	2.237	2.715	3.263	3.886	-	-						
OP-MPXM046ML	114X4284	P00	MLZ021T4	E	27	3.254	4.003	4.854	5.810	6.873	8.042	9.315						
					32	2.989	3.684	4.473	5.361	6.351	7.444	8.641	4.695	2.310	2.03		69	38
					38	2.662	3.289	4.001	4.804	5.703	6.702	7.806						
					43	2.382	2.948	3.592	4.322	5.143	-	-						
OP-MPXM046ML	114X4281	P00	MLZ021T5	G	27	3.273	4.021	4.867	5.814	6.863	8.011	9.258						
					32	3.021	3.712	4.495	5.371	6.344	7.414	8.580	4.720	2.422	1.95		69	38
					38	2.708	3.328	4.030	4.818	5.697	6.669	7.737						
					43	2.440	2.996	3.626	4.337	5.135	-	-						

MBP

This table continues on the next page

(1) G - Compressor 230V/1~/50Hz, fan 230V/1~/50Hz
E - Compressor 400V/3~/50Hz, fan 230V/1~/50Hz
(2) Nominal conditions (EN13215), Evaporating temperatures at dew point, Superheat 10K, Subcooling 0K
(3) Rated conditions (EN13215), Evaporating temperature (dew point) -10°C, Ambient air temperature +32°C, Return Gas Temperature 20°C, Subcooling 0K

SEPR, Seasonal Energy Performance Ratio
Q [kW], Cooling Capacity
P [kW], Power Input

For regular updates and detailed capacities, please refer to **Coolselector®2** software

Optyma™ Plus - Performance data R452A MBP

Model	Code	Version	Compressor	Electrical code (1)	Tamb [°C]	Cooling capacity Q [kW] (2) Te [°C] -20°C	-15°C	-10°C	-5°C	0°C	5°C	10°C	EcoDesign (3) Q [kW]	P [kW]	COP	SEPR	Sound power level dB(A)	Sound pressure level 10 m dB(A)
OP-MPXM057ML	114X4290	P00	MLZ026T5	G	27	4.063	4.991	6.034	7.195	8.472	9.863	11.365						
					32	3.748	4.604	5.566	6.636	7.816	9.106	10.503	5.848	2.956	1.98	3.16	69	38
					38	3.354	4.120	4.979	5.936	6.996	8.159	9.430						
					43	3.013	3.698	4.467	5.326	6.282	-	-						
OP-MPXM057ML	114X4293	P00	MLZ026T4	E	27	4.035	4.949	5.981	7.135	8.410	9.805	11.316						
					32	3.694	4.539	5.493	6.560	7.741	9.038	10.450	5.766	2.859	2.02	3.37	69	38
					38	3.267	4.023	4.877	5.834	6.900	8.077	9.367						
					43	2.895	3.571	4.337	5.200	6.165	-	-						
OP-MPXM068ML	114X4308	P00	MLZ030T5	G	27	4.934	6.035	7.292	8.710	10.292	12.035	13.938						
					32	4.560	5.576	6.736	8.048	9.515	11.139	12.921	7.070	3.502	2.02	3.21	70	39
					38	4.098	5.007	6.046	7.224	8.550	10.027	11.662						
					43	3.702	4.516	5.449	6.513	7.717	-	-						
OP-MPXM068ML	114X4311	P00	MLZ030T4	E	27	4.911	6.018	7.288	8.727	10.338	12.120	14.073						
					32	4.537	5.559	6.731	8.063	9.559	11.223	13.055	7.062	3.363	2.1	3.39	70	39
					38	4.079	4.993	6.044	7.242	8.597	10.115	11.801						
					43	3.690	4.508	5.453	6.537	7.771	-	-						
OP-MPXM080ML	114X4321	P00	MLZ038T5	G	27	5.708	7.011	8.488	10.142	11.976	13.987	16.172						
					32	5.241	6.449	7.818	9.354	11.060	12.938	14.989	8.209	4.157	1.97	3.14	70	39
					38	4.661	5.748	6.980	8.366	9.914	11.628	13.513						
					43	4.162	5.140	6.251	7.507	8.917	-	-						
OP-MPXM080ML	114X4324	P00	MLZ038T4	E	27	5.728	7.015	8.474	10.109	11.923	13.916	16.084						
					32	5.246	6.443	7.798	9.319	11.010	12.875	14.913	8.183	3.917	2.09	3.44	70	39
					38	4.644	5.724	6.949	8.328	9.867	11.574	13.454						
					43	4.122	5.100	6.210	7.465	8.873	-	-						
OP-MPXM108ML	114X4344	P00	MLZ048T4	E	27	7.664	9.383	11.323	13.486	15.872	18.475	21.287						
					32	6.993	8.581	10.374	12.376	14.589	17.011	19.641	10.904	5.444	2	3.39	70	39
					38	6.157	7.575	9.179	10.978	12.975	15.175	17.584						
					43	5.433	6.699	8.136	9.756	11.567	-	-						
OP-MPXM125ML	114X4414	P00	MLZ058T4	E	27	9.210	11.328	13.729	16.422	19.412	22.695	26.267						
					32	8.436	10.404	12.635	15.140	17.927	20.998	24.354	13.252	6.120	2.17	3.49	77	46
					38	7.469	9.242	11.255	13.523	16.058	18.866	21.958						
					43	6.634	8.232	10.052	12.111	14.426	-	-						
OP-MPXM162ML	114X4434	P00	MLZ076T4	E	27	11.175	13.803	16.738	19.988	23.548	27.412	31.573						
					32	10.156	12.607	15.341	18.367	21.687	25.302	29.210	16.122	8.411	1.92	3.12	77	46
					38	8.876	11.096	13.572	16.317	19.338	22.645	26.245						
					43	7.765	9.777	12.023	14.520	17.283	-	-						

MBP

(1) G - Compressor 230V/1~/50Hz, fan 230V/1~/50Hz
E - Compressor 400V/3~/50Hz, fan 230V/1~/50Hz
(2) Nominal conditions (EN13215), Evaporating temperatures at dew point, Superheat 10K, Subcooling 0K
(3) Rated conditions (EN13215), Evaporating temperature (dew point) -10°C, Ambient air temperature +32°C, Return Gas Temperature 20°C, Subcooling 0K

SEPR, Seasonal Energy Performance Ratio
Q [kW], Cooling Capacity
P [kW], Power Input

For regular updates and detailed capacities, please refer to **Coolselector®2** software

Optyma™ Plus - Performance data R404A/R507 MBP

Model	Code	Version	Compressor	Electrical code (1)	Tamb [°C]	Cooling capacity Q [kW] (2) Te [°C] -20°C	-15°C	-10°C	-5°C	0°C	5°C	10°C	EcoDesign (3) Q [kW]	P [kW]	COP	SEPR	Sound power level dB(A)	Sound pressure level 10 m dB(A)
OP-MPYM008MY	114X4119	P00	MLY80RAb	G	27	-	0.756	0.936	1.132	1.345	1.573	-						
					32	-	0.683	0.848	1.031	1.230	1.446	-	0.888	0.421	2.11		60	29
					38	-	0.596	0.744	0.909	1.092	1.293	-						
					43	-	0.524	0.657	0.808	0.978	1.165	-						
OP-MPYM009MY	114X4120	P00	MLY90RAb	G	27	-	0.814	1.007	1.217	1.443	1.684	-						
					32	-	0.737	0.914	1.108	1.319	1.546	-	0.960	0.480	1.99		61	30
					38	-	0.644	0.802	0.978	1.171	1.381	-						
					43	-	0.568	0.709	0.869	1.047	1.244	-						
OP-MPYM012MP	114X4121	P00	MPT12RA	G	27	-	1.115	1.365	1.631	1.914	2.213	2.526						
					32	-	1.010	1.239	1.486	1.751	2.033	2.331	1.300	0.646	2.01		63	32
					38	-	0.883	1.089	1.313	1.556	1.817	2.097						
					43	-	0.779	0.964	1.169	1.394	1.638	1.902						
OP-MPYM014MP	114X4122	P00	MPT14RA	G	27	-	1.130	1.396	1.685	1.999	2.335	2.693						
					32	-	1.031	1.276	1.546	1.841	2.160	2.502	1.340	0.795	1.69		60	29
					38	-	0.913	1.133	1.380	1.652	1.950	2.274						
					43	-	0.814	1.014	1.241	1.494	1.775	2.084						
OP-MPBM018AJ	114X4230	P00	CAJ9510Z	G	27	1.184	1.477	1.818	2.209	2.651	3.146	3.694						
					32	1.078	1.351	1.666	2.024	2.429	2.881	3.382	1.746	0.903	1.93		64	33
					38	-	-	1.480	1.800	2.160	2.561	3.005						
					43	-	-	1.324	1.612	1.933	2.292	2.688						
OP-MPBM024AJ	114X4200	P00	CAJ9513Z	G	27	-	1.822	2.288	2.820	3.418	4.082	4.808						
					32	-	1.638	2.067	2.557	3.108	3.720	4.392	2.168	1.045	2.07		64	33
					38	-	1.417	1.804	2.243	2.738	3.288	3.895						
					43		1.235	1.586	1.983	2.431	2.930	3.482						

MBP

This table continues on the next page

(1) G - Compressor 230V/1~/50Hz, fan 230V/1~/50Hz
E - Compressor 400V/3~/50Hz, fan 230V/1~/50Hz
(2) Nominal conditions (EN13215), Evaporating temperatures at dew point, Superheat 10K, Subcooling 0K
(3) Rated conditions (EN13215), Evaporating temperature (dew point) -10°C, Ambient air temperature +32°C, Return Gas Temperature 20°C, Subcooling 0K

SEPR, Seasonal Energy Performance Ratio
Q [kW], Cooling Capacity
P [kW], Power Input

Optyma™ Plus - Performance data R404A/R507 MBP

Model	Code	Version	Compressor	Electrical code (1)	Tamb [°C]	Cooling capacity Q [kW] (2) Te [°C] -20°C	-15°C	-10°C	-5°C	0°C	5°C	10°C	EcoDesign (3) Q [kW]	P [kW]	COP	SEPR	Sound power level dB(A)	Sound pressure level 10 m dB(A)
OP-MPBM026AJ	114X4212	P00	CAJ4517Z	G	27	1.626	2.039	2.517	3.061	3.674	4.356	5.104						
					32	1.459	1.844	2.285	2.788	3.353	3.982	4.675	2.399	1.172	2.05		67	36
					38	1.259	1.609	2.007	2.459	2.967	3.533	4.159						
					43	-	1.413	1.776	2.185	2.644	3.157	3.728						
OP-MPBM026AJ	114X4213	P00	TAJ4517Z	E	27	1.595	2.029	2.522	3.078	3.700	4.388	5.141						
					32	1.416	1.824	2.285	2.802	3.379	4.017	4.717	2.398	1.231	1.95		67	36
					38	1.199	1.575	1.996	2.465	2.987	3.565	4.200						
					43	-	1.368	1.754	2.182	2.657	3.184	3.765						
OP-MPBM034AJ	114X4227	P00	TAJ4519Z	E	27	2.018	2.526	3.102	3.747	4.461	5.242	6.087						
					32	1.811	2.287	2.823	3.420	4.079	4.799	5.581	2.970	1.573	1.89		67	36
					38	1.559	1.997	2.484	3.023	3.616	4.264	4.969						
					43	-	1.753	2.199	2.689	3.227	3.815	4.456						
OP-MPBM034AJ	114X4226	P00	CAJ4519Z	G	27	2.015	2.547	3.147	3.819	4.563	5.376	6.257						
					32	1.802	2.300	2.859	3.480	4.166	4.916	5.729	3.008	1.650	1.82		67	36
					38	1.544	2.000	2.506	3.065	3.680	4.353	5.085						
					43	-	1.749	2.209	2.715	3.270	3.878	4.541						
OP-MPXM034ML	114X4264	P00	MLZ015T4	E	27	2.502	3.081	3.734	4.463	5.272	6.158	7.121						
					32	2.251	2.793	3.398	4.073	4.820	5.640	6.535	3.580	1.693	2.11		68	37
					38	1.926	2.424	2.974	3.584	4.258	5.001	5.814						
					43	1.634	2.095	2.600	3.157	3.772	4.451	5.198						
OP-MPXM034ML	114X4261	P00	MLZ015T5	G	27	2.591	3.149	3.783	4.496	5.289	6.163	7.122						
					32	2.373	2.890	3.478	4.142	4.882	5.703	6.608	3.669	1.762	2.08		68	37
					38	2.101	2.569	3.102	3.705	4.383	5.139	5.981						
					43	1.867	2.293	2.780	3.334	3.959	4.662	5.452						
OP-MPXM046ML	114X4284	P00	MLZ021T4	E	27	3.404	4.124	4.928	5.824	6.815	7.905	9.099						
					32	3.108	3.772	4.514	5.340	6.257	7.271	8.390	4.778	2.350	2.03		68	37
					38	2.729	3.325	3.990	4.731	5.559	6.482	7.511						
					43	2.392	2.930	3.529	4.199	4.952	5.798	6.754						
OP-MPXM046ML	114X4281	P00	MLZ021T5	G	27	3.450	4.182	5.004	5.917	6.922	8.018	9.203						
					32	3.147	3.821	4.578	5.421	6.352	7.371	8.481	4.848	2.435	1.99		68	37
					38	2.762	3.365	4.043	4.800	5.640	6.567	7.586						
					43	2.422	2.964	3.574	4.258	5.022	5.872	6.817						

MBP

This table continues on the next page

(1) G - Compressor 230V/1~/50Hz, fan 230V/1~/50Hz
E - Compressor 400V/3~/50Hz, fan 230V/1~/50Hz
(2) Nominal conditions (EN13215), Evaporating temperatures at dew point, Superheat 10K, Subcooling 0K
(3) Rated conditions (EN13215), Evaporating temperature (dew point) -10°C, Ambient air temperature +32°C, Return Gas Temperature 20°C, Subcooling 0K

SEPR, Seasonal Energy Performance Ratio
Q [kW], Cooling Capacity
P [kW], Power Input

For regular updates and detailed capacities, please refer to **Coolselector®2** software

Optyma™ Plus - Performance data R404A/R507 MBP

Model	Code	Version	Compressor	Electrical code (1)	Tamb [°C]	Cooling capacity Q [kW] (2) Te [°C] -20°C	-15°C	-10°C	-5°C	0°C	5°C	10°C	EcoDesign (3) Q [kW]	P [kW]	COP	SEPR	Sound power level dB(A)	Sound pressure level 10 m dB(A)
OP-MPXM057ML	114X4290	P00	MLZ026T5	G	27	3.973	4.806	5.741	6.777	7.912	9.142	10.467						
					32	3.619	4.382	5.238	6.189	7.234	8.373	9.609	5.571	3.291	1.69	2.90	68	37
					38	3.179	3.855	4.615	5.460	6.396	7.424	8.553						
					43	2.795	3.397	4.073	4.830	5.673	6.609	7.650						
OP-MPXM057ML	114X4293	P00	MLZ026T4	E	27	3.977	4.812	5.749	6.788	7.926	9.162	10.493						
					32	3.625	4.390	5.249	6.203	7.252	8.397	9.639	5.580	3.164	1.76	3.01	68	37
					38	3.189	3.868	4.630	5.480	6.420	7.455	8.590						
					43	2.809	3.414	4.094	4.855	5.703	6.645	7.693						
OP-MPXM068ML	114X4308	P00	MLZ030T5	G	27	5.273	6.446	7.786	9.302	10.997	12.876	14.938						
					32	4.832	5.927	7.178	8.594	10.182	11.949	13.898	7.568	3.353	2.26	3.66	69	38
					38	4.283	5.278	6.417	7.709	9.166	10.795	12.606						
					43	3.806	4.714	5.755	6.941	8.284	9.797	11.492						
OP-MPXM068ML	114X4311	P00	MLZ030T4	E	27	5.271	6.443	7.784	9.300	10.998	12.880	14.945						
					32	4.832	5.926	7.177	8.594	10.185	11.954	13.907	7.566	3.279	2.31	3.73	69	38
					38	4.284	5.279	6.418	7.711	9.170	10.803	12.618						
					43	3.809	4.717	5.758	6.945	8.291	9.806	11.506						
OP-MPXM080ML	114X4321	P00	MLZ038T5	G	27	6.066	7.469	9.041	10.768	12.634	14.626	16.730						
					32	5.504	6.806	8.273	9.892	11.650	13.536	15.538	8.735	4.027	2.17	3.33	69	38
					38	4.826	5.992	7.319	8.797	10.415	12.164	14.039						
					43	4.268	5.307	6.506	7.857	9.349	10.976	12.738						
OP-MPXM080ML	114X4324	P00	MLZ038T4	E	27	6.238	7.571	9.084	10.780	12.662	14.727	16.973						
					32	5.708	6.948	8.353	9.930	11.682	13.612	15.720	8.822	3.856	2.29	3.71	69	38
					38	5.026	6.146	7.415	8.842	10.434	12.197	14.137						
					43	4.423	5.435	6.584	7.881	9.335	10.956	12.755						
OP-MPXM108ML	114X4344	P00	MLZ048T4	E	27	7.856	9.491	11.303	13.308	15.517	17.940	20.584						
					32	7.147	8.653	10.321	12.168	14.209	16.459	18.932	10.943	5.478	2.00	3.31	75	44
					38	6.248	7.596	9.087	10.742	12.581	14.623	16.892						
					43	5.457	6.671	8.012	9.504	11.172	13.041	15.144						
OP-MPXM125ML	114X4414	P00	MLZ058T4	E	27	9.409	11.580	14.000	16.676	19.608	22.795	26.233						
					32	8.513	10.552	12.820	15.326	18.074	21.068	24.310	13.539	6.214	2.18	3.48	77	46
					38	7.385	9.257	11.334	13.628	16.149	18.906	21.911						
					43	6.404	8.125	10.034	12.145	14.472	17.028	19.836						
OP-MPXM162ML	114X4434	P00	MLZ076T4	E	27	12.516	15.012	17.725	20.689	23.929	27.465	31.318						
					32	11.400	13.616	16.030	18.678	21.592	24.799	28.325	16.975	8.520	1.99	3.23	77	46
					38	10.034	11.882	13.909	16.158	18.665	21.464	24.592						
					43	8.881	10.396	12.079	13.976	16.130	18.579	21.368						

MBP
(1) G - Compressor 230V/1~/50Hz, fan 230V/1~/50Hz
E - Compressor 400V/3~/50Hz, fan 230V/1~/50Hz
(2) Nominal conditions (EN13215), Evaporating temperatures at dew point, Superheat 10K, Subcooling 0K
(3) Rated conditions (EN13215), Evaporating temperature (dew point) -10°C, Ambient air temperature +32°C, Return Gas Temperature 20°C, Subcooling 0K

SEPR, Seasonal Energy Performance Ratio
Q [kW], Cooling Capacity
P [kW], Power Input

For regular updates and detailed capacities, please refer to **Coolselector®2** software

Application	Code number	Model number	Compressor Model	Electrical Code (1)	Refrigerant (2)	Condenser Coil			Fan		Receiver	Dimensions				Connection		Weight	
						Type	Airflow	Internal Volume	Number	Blade ø	Volume	Housing	Height	Width	Length	Suction valve	Liquid valve	Gross	Net
							(m^2/h)	(dm^3)		(mm)	(L)		mm	mm	mm	inch	inch	Kg	Kg
LBP	114X3118	OP-LPQM017MPP00G	MPT16LA	G	Q	A7	2,200	0.39	1	365	1.3	H1	650	941	406	3/8"	3/8"	65	49
LBP	114X3216	OP-LPQM026AJP00G	CAJ2446Z	G	Q	D7	3,300	0.58	1	450	3.4	H2	813	1090	480	1/2"	3/8"	97	80
LBP	114X3225	OP-LPQM048NTP00G	NTZ048-5	G	Q	D7	3,300	0.58	1	450	3.4	H2	813	1090	480	5/8"	3/8"	102	80
LBP	114X3233	OP-LPQM048NTP00E	NTZ048-4	E	Q	D7	3,300	0.58	1	450	3.4	H2	813	1090	480	5/8"	3/8"	102	80
LBP	114X3253	OP-LPQM074FHP00E	TFH2511Z	E	Q	D7	3,300	0.58	1	450	3.4	H2	813	1090	480	5/8"	3/8"	106	89
LBP	114X3252	OP-LPQM074FHP00G	FH2511Z	G	Q	D7	3,300	0.58	1	450	3.4	H2	813	1090	480	5/8"	3/8"	111	94
LBP	114X3241	OP-LPQM068NTP00G	NTZ068-5	G	Q	D7	3,300	0.58	1	450	3.4	H2	813	1090	480	5/8"	3/8"	102	80
LBP	114X3249	OP-LPQM068NTP00E	NTZ068-4	E	Q	D7	3,300	0.58	1	450	3.4	H2	813	1090	480	5/8"	3/8"	102	80
LBP	114X3371	OP-LPOM067LLP02E	LLZ013T4A	E	O	G7	5200	1.62	1	500	6.2	H3	965	531	1441	3/4"	1/2"	161	135
LBP	114X3372	OP-LPOM084LLP02E	LLZ015T4A	E	O	G7	5200	1.62	1	500	6.2	H3	965	531	1441	3/4"	1/2"	161	135
LBP	114X3373	OP-LPOM098LLP02E	LLZ018T4A	E	O	G7	5200	1.62	1	500	6.2	H3	965	531	1441	3/4"	1/2"	162	136
LBP	114X3485	OP-LPOM120LLP02E	LLZ024T4A	E	O	J7	9500	1.97	2	500	10	H4	966	650	1835	1 1/8"	3/4"	212	161
LBP	114X3486	OP-LPOM168LLP02E	LLZ034T4A	E	O	J7	9500	1.97	2	500	10	H4	966	650	1835	1 1/8"	3/4"	217	166
MBP	114X4119	OP-MPYM008MYP00G	MLY80RAb	G	Y	A7	2,200	0.39	1	365	1.3	H1	650	941	406	3/8"	1/4"	65	49
MBP	114X4120	OP-MPYM009MYP00G	MLY90RAb	G	Y	A7	2,200	0.39	1	365	1.3	H1	650	941	406	3/8"	1/4"	65	49
MBP	114X4121	OP-MPYM012MPP00G	MPT12RA	G	Y	A7	2,200	0.39	1	365	1.3	H1	650	941	406	3/8"	3/8"	65	49
MBP	114X4122	OP-MPYM014MPP00G	MPT14RA	G	Y	A7	2,200	0.39	1	365	1.3	H1	650	941	406	3/8"	3/8"	65	49
MBP	114X4230	OP-MPBM018AJP00G	CAJ9510Z	G	B	D7	3,300	0.58	1	450	3.4	H2	813	1090	480	1/2"	3/8"	97	80
MBP	114X4200	OP-MPBM024AJP00G	CAJ9513Z	G	B	D7	3,300	0.58	1	450	3.4	H2	813	1090	480	1/2"	3/8"	97	80
MBP	114X4212	OP-MPBM026AJP00G	CAJ4517Z	G	B	D7	3,300	0.58	1	450	3.4	H2	813	1090	480	1/2"	3/8"	97	80
MBP	114X4213	OP-MPBM026AJP00E	TAJ4517Z	E	B	D7	3,300	0.58	1	450	3.4	H2	813	1090	480	1/2"	3/8"	97	80
MBP	114X4220	OP-MPGM033AJP00G	CAJ4511Y	G	G	D7	3,300	0.58	1	450	3.4	H2	813	1090	480	1/2"	3/8"	97	80
MBP	114X4226	OP-MPBM034AJP00G	CAJ4519Z	G	B	D7	3,300	0.58	1	450	3.4	H2	813	1090	480	1/2"	3/8"	97	80
MBP	114X4227	OP-MPBM034AJP00E	TAJ4519Z	E	B	D7	3,300	0.58	1	450	3.4	H2	813	1090	480	1/2"	3/8"	97	80
MBP	114X4261	OP-MPXM034MLP00G	MLZ015T5	G	X	D7	3,300	0.58	1	450	3.4	H2	813	1090	480	3/4"	1/2"	109	87
MBP	114X4264	OP-MPXM034MLP00E	MLZ015T4	E	X	D7	3,300	0.58	1	450	3.4	H2	813	1090	480	3/4"	1/2"	109	87
MBP	114X4281	OP-MPXM046MLP00G	MLZ021T5	G	X	D7	3,300	0.58	1	450	3.4	H2	813	1090	480	3/4"	1/2"	109	87
MBP	114X4284	OP-MPXM046MLP00E	MLZ021T4	E	X	D7	3,300	0.58	1	450	3.4	H2	813	1090	480	3/4"	1/2"	109	87
MBP	114X4290	OP-MPXM057MLP00G	MLZ026T5	G	X	D7	3,300	0.58	1	450	3.4	H2	813	1090	480	3/4"	1/2"	109	87
MBP	114X4293	OP-MPXM057MLP00E	MLZ026T4	E	X	D7	3,300	0.58	1	450	3.4	H2	813	1090	480	3/4"	1/2"	109	87
MBP	114X4308	OP-MPXM068MLP00G	MLZ030T5	G	X	G7	5,200	1.62	1	500	6.2	H3	965	1441	531	7/8"	5/8"	137	101
MBP	114X4311	OP-MPXM068MLP00E	MLZ030T4	E	X	G7	5,200	1.62	1	500	6.2	H3	965	1441	531	7/8"	5/8"	137	101
MBP	114X4321	OP-MPXM080MLP00G	MLZ038T5	G	X	G7	5,200	1.62	1	500	6.2	H3	965	1441	531	7/8"	5/8"	137	101
MBP	114X4324	OP-MPXM080MLP00E	MLZ038T4	E	X	G7	5,200	1.62	1	500	6.2	H3	965	1441	531	7/8"	5/8"	137	101
MBP	114X4344	OP-MPXM108MLP00E	MLZ048T4	E	X	G7	5,200	1.62	1	500	6.2	H3	965	1441	531	7/8"	5/8"	137	101
MBP	114X4414	OP-MPXM125MLP00E	MLZ058T4	E	X	J7	9,500	1.97	2	500	10	H4	966	1835	650	1 1/8"	3/4"	218	169
MBP	114X4434	OP-MPXM162MLP00E	MLZ076T4	E	X	J7	9,500	1.97	2	500	10	H4	966	1835	650	1 1/8"	3/4"	218	169

(1) G - Compressor 230V/1~/50Hz, fan 230V/1~/50Hz
E - Compressor 400V/3~/50Hz, fan 230V/1~/50Hz
(2) G - R134a
X - R134a, R404A/R507, R407A, R407F, R449A, R448A, R513A, R452A
Y - R404A/R507, R449A
Q - R404A/R507, R452A
O - R404A/R507, R452A, R448A, R449A

Designation	LPQM017MP	LPQM026AJ	LPQM048NT	LPQM048NT	LPQM068NT	LPQM068NT	LPQM074FH
Code Number	114X3118	114X3216	114X3225	114X3233	114X3241	114X3249	114X3252
Compressor Description	MPT16LA	CAJ2446Z	NTZ048-5	NTZ048-4	NTZ068-5	NTZ068-4	FH2511Z
Oil	POE32	RL32HA/HT	175PZ-POE	175PZ-POE	175PZ-POE	175PZ-POE	RL32HA/HT
Housing	H1	H2	H2	H2	H2	H2	H2
Spare Parts							
Compressor single pack	123B2127	118U3992	120F0228	120F0226	120F0232	120F0230	118U3914
Condenser	118U5217	118U5218	118U5218	118U5218	118U5218	118U5218	118U5218
Discharge pressure sensor	118U3722	118U3722	118U3722	118U3722	118U3722	118U3722	118U3722
Fan assembly	-	-	-	-	-	-	-
Fan blade	118U3480	118U3481	118U3481	118U3481	118U3481	118U3481	118U3481
Fan capacitor	118U3296	118U3297	118U3297	118U3297	118U3297	118U3297	118U3297
Fan cowl/grill	118U3483	118U3484	118U3484	118U3484	118U3484	118U3484	118U3484
Fan motor	118U3477	118U3823	118U3823	118U3823	118U3823	118U3823	118U3823
Filter drier	023Z5039	023Z5040	023Z5040	023Z5040	023Z5040	023Z5040	023Z5040
High-pressure switch	118U3718	118U3718	118U3718	118U3718	118U3718	118U3718	118U3718
Liquid valve	009G7051	009G7051	009G7051	009G7051	009G7051	009G7051	009G7051
Low-pressure switch	118U3720	118U3720	118U3720	118U3720	118U3720	118U3720	118U3720
Receiver	118U3474	118U3475	118U3475	118U3475	118U3475	118U3475	118U3475
Sight glass	014L0182	014L0172	014L0172	014L0172	014L0172	014L0172	014L0172
Suction pressure sensor	118U3721	118U3721	118U3721	118U3721	118U3721	118U3721	118U3721
Suction valve	009G7051	009G7051	009G7053	009G7053	009G7053	009G7053	009G7053
Electrical Spare Parts							
Crankcase heater	118U0051	118U0051	120Z0459	120Z0459	120Z0459	120Z0459	120Z0459
Optyma™ Plus Controller	118U3465	118U3465	118U3465	118U3465	118U3465	118U3465	118U3465
Discharge temperature sensor	084N2007	084N2007	084N2007	084N2007	084N2007	084N2007	084N2007
Suction and ambient temp sensor	084N0003	084N0003	084N0003	084N0003	084N0003	084N0003	084N0003
Contactor kit	118U3845	118U3845	118U3846	118U3845	118U3848	118U3845	118U3845
Door handle	118U3858	118U3858	118U3858	118U3858	118U3858	118U3858	118U3858
Main switch kit	118U3853	118U3851	118U3852	118U3853	118U3854	118U3851	118U3853
Run capacitor	123B9219		8173041	-	8173041	-	
Starting capacitor	123B9316	118U5191*	8173001	-	8173001	-	118U5199*
Starting relay	123B9151		8173022	-	8173022	-	
Electrical Characteristics							
Wiring Diagram	WD7	WD3	WD3	WD5	WD3	WD5	WD3
LRA Compressor [A]	19	29	37	16	53	25	81
MCC Compressor [A]	4	7.9	11	4.8	17	8.4	24
Max cont.power [kW]	0.89	1.31	2.19	2.28	3.62	3.57	3.45
MCC Fan [A]	0.32	0.47	0.47	0.47	0.47	0.47	0.47
Fan Power [W]	1x25	1x68	1x68	1x68	1x68	1x68	1x68
Min Fuse rating gL/gG (A)	10	16	20	10	25	16	32
Accessories (Not Premounted)							
Acoustic hood	-	-	120Z0575	120Z0575	120Z0575	120Z0575	-
Fusible Plug	118U5170	118U5170	118U5170	118U5170	118U5170	118U5170	118U5170
Adap-Kool Accessories							
External Diplay & settings	084B8575	084B8575	084B8575	084B8575	084B8575	084B8575	084B8575
Cable for EKA Displays 6 m	084B7299	084B7299	084B7299	084B7299	084B7299	084B7299	084B7299
Mounting kit for EKA Display	084B8584	084B8584	084B8584	084B8584	084B8584	084B8584	084B8584
MODBUS Communication Module	084B8571	084B8571	084B8571	084B8571	084B8571	084B8571	084B8571
Lon-Bus Communication Module	084B8579	084B8579	084B8579	084B8579	084B8579	084B8579	084B8579
Programming Key	084B8582	084B8582	084B8582	084B8582	084B8582	084B8582	084B8582
Sheet Metal							
Top Panel	118U5121	118U5126	118U5126	118U5126	118U5126	118U5126	118U5126
Fan Panel	118U5122	118U5127	118U5127	118U5127	118U5127	118U5127	118U5127
Back Panel	118U5123	118U5128	118U5128	118U5128	118U5128	118U5128	118U5128
Front Panel	118U5124	118U5129	118U5129	118U5129	118U5129	118U5129	118U5129
Access Panel	118U5125	118U5130	118U5130	118U5130	118U5130	118U5130	118U5130
Left side Panel	118U5163	118U5164	118U5164	118U5164	118U5164	118U5164	118U5164
Fan Panel (LH)	-	-	-	-	-	-	-
Fan Panel (RH)	-	-	-	-	-	-	-

MCA - Minimum Circuit Ampacity
MCC - Max Continuous Current
LRA - Locked Rotor Amps
* - Spare part, Starting Kit

Designation	LPQM074FH	LPQM096NT	LPQM136NT	LPQM215LL	LPQM271LL
Code Number	114X3253	114X3357	114X3365	114X3476	114X3482
Compressor Description	TFH2511Z	NTZ096-4	NTZ136-4	LLZ024T4	LLZ034T4
Oil	RL32HA/HT	175PZ-POE	175PZ-POE	215PZ-POE46	215PZ-POE46
Housing	H2	H3	H3	H4	H4
Spare Parts					
Compressor single pack	118U3915	120F0234	120F0236	121L9541	121L9543
Condenser	118U5218	118U5219	118U5219	118U5220	118U5220
Discharge pressure sensor	118U3722	118U3722	118U3722	118U3722	118U3722
Fan assembly	-	118U3829	118U3829	118U3829	118U3829
Fan blade	118U3481	-	-	-	-
Fan capacitor	118U3297	-	-	-	-
Fan cowl/grill	118U3484	118U3485	118U3485	118U3485	118U3485
Fan motor	118U3823				
Filter drier	023Z5040	023Z5044	023Z5044	023Z5046	023Z5046
High-pressure switch	118U3718	118U3718	118U3718	118U3718	118U3718
Liquid valve	009G7051	009G7052	009G7052	009G7054	009G7054
Low-pressure switch	118U3720	118U3720	118U3720	118U3720	118U3720
Receiver	118U3475	118U3476	118U3476	118U3926	118U3926
Sight glass	014L0172	014L0173	014L0173	014L0175	014L0175
Suction pressure sensor	118U3721	118U3721	118U3721	118U3721	118U3721
Suction valve	009G7053	009G7055	009G7056	009G7056	009G7056
Electrical Spare Parts					
Crankcase heater	120Z0459	120Z0459	120Z0459	120Z5040	120Z5040
Optyma™ Plus Controller	118U3465	118U3465	118U3465	118U3465	118U3465
Discharge temperature sensor	084N2007	084N2007	084N2007	084N2007	084N2007
Suction and ambient temp sensor	084N0003	084N0003	084N0003	084N0003	084N0003
Contactor kit	118U3845	118U3846	118U3847	118U3848	118U3848
Door handle	118U3858	118U3858	118U3858	118U3858	118U3858
Main switch kit	118U3855	118U3851	118U3852	118U3855	118U3856
Run capacitor	-	-	-	-	-
Starting capacitor	-	-	-	-	-
Starting relay	-	-	-	-	-
Electrical Characteristics					
Wiring Diagram	WD5	WD5	WD5	WD6	WD6
LRA Compressor [A]	28	32	51	95	150
MCC Compressor [A]	7.2	10.1	14.3	21	26
Max cont.power [kW]	3.34	4.53	6.87	7.96	11.1
MCC Fan [A]	0.47	0.97	0.97	2x0.97	2x0.97
Fan Power [W]	1x68	1x130	1x130	2x130	2x130
Min Fuse rating gL/gG (A)	16	16	20	32	40
Accessories (Not Premounted)					
Acoustic hood		120Z0575	120Z0575	120Z5053	120Z5053
Fusible Plug	118U5170	118U5170	118U5170	118U5170	118U5170
Adap-Kool Accessories					
External Diplay & settings	084B8575	084B8575	084B8575	084B8575	084B8575
Cable for EKA Displays 6 m	084B7299	084B7299	084B7299	084B7299	084B7299
Mounting kit for EKA Display	084B8584	084B8584	084B8584	084B8584	084B8584
MODBUS Communication Module	084B8571	084B8571	084B8571	084B8571	084B8571
Lon-Bus Communication Module	084B8579	084B8579	084B8579	084B8579	084B8579
Programming Key	084B8582	084B8582	084B8582	084B8582	084B8582
Sheet Metal					
Top Panel	118U5126	118U5131	118U5131	118U5136	118U5136
Fan Panel	118U5127	118U5132	118U5132	-	-
Back Panel	118U5128	118U5133	118U5133	118U5139	118U5139
Front Panel	118U5129	118U5134	118U5134	-	-
Access Panel	118U5130	118U5135	118U5135	118U5140	118U5140
Left side Panel	118U5164	118U5165	118U5165	118U5166	118U5166
Fan Panel (LH)	-	-	-	118U5137	118U5137
Fan Panel (RH)	-	-	-	118U5138	118U5138

MCA - Minimum Circuit Ampacity
MCC - Max Continuous Current
LRA - Locked Rotor Amps
* - Spare part, Starting Kit

Designation	OP-LPOM067LL	OP-LPOM084LL	OP-LPOM098LL	OP-LPOM120LL	OP-LPOM168LL
Code Number	114X3371	114X3372	114X3373	114X3485	114X3486
Compressor Description	LLZ013T4A	LLZ015T4A	LLZ018T4A	LLZ024T4A	LLZ034T4A
Oil	120Z0648	120Z0648	120Z0648	120Z0648	120Z0648
Housing	H3	H3	H3	H4	H4
Spare Parts					
Compressor single pack	121L9535	121L9537	121L9539	121L9541	121L9543
Condenser	118U5219	118U5219	118U5219	118U5220	118U5220
Discharge pressure sensor	118U3722	118U3722	118U3722	118U3722	118U3722
Fan assembly	118U3829	118U3829	118U3829	118U3829	118U3829
Fan cowl/grill	118U3485	118U3485	118U3485	118U3485	118U3485
Filter drier	023Z5044	023Z5044	023Z5044	023Z5046	023Z5046
High-pressure switch	118U3718	118U3718	118U3718	118U3718	118U3718
Liquid valve	009G7052	009G7052	009G7052	009G7054	009G7054
Low-pressure switch	118U3720	118U3720	118U3720	118U3720	118U3720
Receiver	118U3476	118U3476	118U3476	118U3926	118U3926
Sight glass	014L0173	014L0173	014L0173	014L0175	014L0175
Suction pressure sensor	118U3721	118U3721	118U3721	118U3721	118U3721
Suction valve	009G7054	009G7054	009G7054	009G7056	009G7056
Electric expansion valve	034G5015	034G5015	034G5015	034G5015	034G5015
Electric expansion valve coil	034G5145	034G5145	034G5145	034G5185	034G5185
Liquid injection controller (Module B plus)	118U4010	118U4010	118U4010	118U4010	118U4010
Acoustic hood	120Z5052	120Z5052	120Z5052	120Z5053	120Z5053
Electrical Spare Parts					
Crankcase heater	120Z5040	120Z5040	120Z5040	120Z5040	120Z5040
Optyma™ Plus Controller	118U3465	118U3465	118U3465	118U3465	118U3465
Discharge temperature sensor	084N2007	084N2007	084N2007	084N2007	084N2007
Suction and ambient temp sensor	084N0003	084N0003	084N0003	084N0003	084N0003
Contactor kit	118U3846	118U3847	118U3847	118U3848	118U3849
Door handle	118U3858	118U3858	118U3858	118U3858	118U3858
Main switch kit	118U3852	118U3852	118U3852	118U3855	118U3856
Run capacitor	-	-	-	-	-
Starting capacitor	-	-	-	-	-
Starting relay	-	-	-	-	-
Electrical Characteristics					
Wiring Diagram	WD8	WD8	WD8	WD9	WD8
LRA Compressor [A]	62	88.5	90	95	150
MCC Compressor [A]	12	15	15	21	26
Max cont.power [kW]	4.6	6.2	6.5	8	11.2
MCC Fan [A]	0.97	0.97	0.97	2x0.97	2x0.97
Fan Power [W]	190	190	190	2x190	2x190
Min Fuse rating gL/gG (A)	16	20	20	32	40
Accessories (Not Premounted)					
Fusible Plug	118U5170	118U5170	118U5170	118U5170	118U5170
Adap-Kool Accessories					
External Diplay & settings	084B8575	084B8575	084B8575	084B8575	084B8575
Cable for EKA Displays 6 m	084B7299	084B7299	084B7299	084B7299	084B7299
Mounting kit for EKA Display	084B8584	084B8584	084B8584	084B8584	084B8584
MODBUS Communication Module	084B8571	084B8571	084B8571	084B8571	084B8571
Lon-Bus Communication Module	084B8579	084B8579	084B8579	084B8579	084B8579
Programming Key	084B8582	084B8582	084B8582	084B8582	084B8582
Sheet Metal					
Top Panel	118U5131	118U5131	118U5131	118U5136	118U5136
Fan Panel	118U5132	118U5132	118U5132	-	-
Back Panel	118U5133	118U5133	118U5133	118U5139	118U5139
Front Panel	118U5134	118U5134	118U5134	-	-
Access Panel	118U5135	118U5135	118U5135	118U5140	118U5140
Left side Panel	118U5165	118U5165	118U5165	118U5166	118U5166
Fan Panel (LH)	-	-	-	118U5137	118U5137
Fan Panel (RH)	-	-	-	118U5138	118U5138

MCA - Minimum Circuit Ampacity
MCC - Max Continuous Current
LRA - Locked Rotor Amps
* - Spare part, Starting Kit

Designation	MPYM008MY	MPYM009MY	MPYM012MP	MPYM014MP	MPBM024AJ	MPBM026AJ	MPBM026AJ	MPGM033AJ	MPBM034AJ
Code Number	114X4119	114X4120	114X4121	114X4122	114X4200	114X4212	114X4213	114X4220	114X4226
Compressor Description	MLY80RAb	MLY90RAb	MPT12RA	MPT14RA	CAJ9513Z	CAJ4517Z	TAJ4517Z	CAJ4511Y	CAJ4519Z
Oil	POE32	POE32	POE32	POE32	RL32HA/HT	RL32HA/HT	RL32HA/HT	RL32HA/HT	RL32HA/HT
Housing	H1	H1	H1	H1	H2	H2	H2	H2	H2
Spare Parts									
Compressor single pack	123B2510	123B2514	123B2518	123B2704	118U3995	118U3993	118U3991	118U3996	118U3994
Condenser	118U5217	118U5217	118U5217	118U5217	118U5218	118U5218	118U5218	118U5218	118U5218
Discharge pressure sensor	118U3722	118U3722	118U3722	118U3722	118U3722	118U3722	118U3722	118U3722	118U3722
Fan assembly	-	-	-	-	-	-	-	-	-
Fan blade	118U3480	118U3480	118U3480	118U3480	118U3481	118U3481	118U3481	118U3481	118U3481
Fan capacitor	118U3296	118U3296	118U3296	118U3296	118U3297	118U3297	118U3297	118U3297	118U3297
Fan cowl/grill	118U3483	118U3483	118U3483	118U3483	118U3484	118U3484	118U3484	118U3484	118U3484
Fan motor	118U3477	118U3477	118U3477	118U3477	118U3823	118U3823	118U3823	118U3823	118U3823
Filter drier	023Z5039	023Z5040	023Z5040	023Z5040	023Z5040	023Z5040	023Z5040	023Z5041	023Z5040
High-pressure switch	118U3718	118U3718	118U3718	118U3718	118U3718	118U3718	118U3718	118U3718	118U3718
Liquid valve	009G7050	009G7050	009G7051	009G7051	009G7022	009G7022	009G7022	009G7022	009G7022
Low-pressure switch	118U3720	118U3720	118U3720	118U3720	118U3720	118U3720	118U3720	118U3720	118U3720
Receiver	118U3474	118U3474	118U3474	118U3474	118U3475	118U3475	118U3475	118U3475	118U3475
Sight glass	014L0181	014L0181	014L0181	014L0181	014L0172	014L0172	014L0172	014L0172	014L0172
Suction pressure sensor	118U3721	118U3721	118U3721	118U3721	118U3721	118U3721	118U3721	118U3721	118U3721
Suction valve	009G7051	009G7051	009G7051	009G7051	009G7021	009G7021	009G7021	009G7021	009G7021
Electrical Spare Parts									
Crankcase heater	118U0051	118U0051	118U0051	118U0051	118U0051	118U0051	118U0051	118U0051	118U0051
Optyma™ Plus Controller	118U3465	118U3465	118U3465	118U3465	118U3465	118U3465	118U3465	118U3465	118U3465
Discharge temperature sensor	084N2007	084N2007	084N2007	084N2007	084N2007	084N2007	084N2007	084N2007	084N2007
Suction and ambient temp sensor	084N0003	084N0003	084N0003	084N0003	084N0003	084N0003	084N0003	084N0003	084N0003
Contactor kit	118U3845	118U3845	118U3845	118U3845	118U3846	118U3847	118U3845	118U3845	118U3847
Door handle	118U3858	118U3858	118U3858	118U3858	118U3858	118U3858	118U3858	118U3858	118U3858
Main switch kit	118U3853	118U3853	118U3853	118U3851	118U3852	118U3852	118U3853	118U3851	118U3852
Run capacitor	123B9222*	123B9222*	123B9315	123B9315			-		
Starting capacitor	123B9315*	123B9315*	123B9215	123B9226	118U5198*	118U5195*	-	118U5194*	118U5196*
Starting relay	123B9133	123B9133	123B9151	123B9139			-		
Electrical Characteristics									
Wiring Diagram	WD7	WD7	WD7	WD7	WD3	WD3	WD2	WD3	WD3
LRA Compressor [A]	14	17	18.5	21	33.5	38.5	18	30	45
MCC Compressor [A]	4.9	5.3	5.3	6.5	10.2	12.7	4	8.9	15.2
Max cont.power [kW]	0.55	0.62	0.84	1.03	1.75	1.96	2.05	1.5	2.7
MCC Fan [A]	0.32	0.32	0.32	0.32	0.47	0.47	0.47	0.47	0.47
Fan Power [W]	1x25	1x25	1x25	1x25	1x68	1x68	1x68	1x68	1x68
Min Fuse rating gL/gG (A)	10	10	10	16	20	20	10	16	20
Accessories (Not Premounted)									
Acoustic hood	-	-	-	-	-	-	-	-	-
Fusible Plug	118U5170	118U5170	118U5170	118U5170	118U5170	118U5170	118U5170	118U5170	118U5170
Adap-Kool Accessories									
External Diplay & settings	084B8575	084B8575	084B8575	084B8575	084B8575	084B8575	084B8575	084B8575	084B8575
Cable for EKA Displays 6 m	084B7299	084B7299	084B7299	084B7299	084B7299	084B7299	084B7299	084B7299	084B7299
Mounting kit for EKA Display	084B8584	084B8584	084B8584	084B8584	084B8584	084B8584	084B8584	084B8584	084B8584
MODBUS Communication Module	084B8571	084B8571	084B8571	084B8571	084B8571	084B8571	084B8571	084B8571	084B8571
Lon-Bus Communication Module	084B8579	084B8579	084B8579	084B8579	084B8579	084B8579	084B8579	084B8579	084B8579
Programming Key	084B8582	084B8582	084B8582	084B8582	084B8582	084B8582	084B8582	084B8582	084B8582
Sheet Metal									
Top Panel	118U5121	118U5121	118U5121	118U5121	118U5126	118U5126	118U5126	118U5126	118U5126
Fan Panel	118U5122	118U5122	118U5122	118U5122	118U5127	118U5127	118U5127	118U5127	118U5127
Back Panel	118U5123	118U5123	118U5123	118U5123	118U5128	118U5128	118U5128	118U5128	118U5128
Front Panel	118U5124	118U5124	118U5124	118U5124	118U5129	118U5129	118U5129	118U5129	118U5129
Access Panel	118U5125	118U5125	118U5125	118U5125	118U5130	118U5130	118U5130	118U5130	118U5130
Left side Panel	118U5163	118U5163	118U5163	118U5163	118U5164	118U5164	118U5164	118U5164	118U5164
Fan Panel (LH)	-	-	-	-	-	-	-	-	-
Fan Panel (RH)	-	-	-	-	-	-	-	-	-

MCA - Minimum Circuit Ampacity
MCC - Max Continuous Current
LRA - Locked Rotor Amps
* - Spare part, Starting Kit

Designation	MPBM034AJ	MPBM018AJ	MPXM034ML	MPXM034ML	MPXM046ML	MPXM046ML	MPXM057ML	MPXM057ML	MPXM068ML
Code Number	114X4227	114X4230	114X4261	114X4264	114X4281	114X4284	114X4290	114X4293	114X4308
Compressor Description	TAJ4519Z	CAJ9510Z	MLZ015T5	MLZ015T4	MLZ021T5	MLZ021T4	MLZ026T5	MLZ026T4	MLZ030T5
Oil	RL32HA/HT	RL32HA/HT	215PZ-POE46	215PZ-POE46	215PZ-POE46	215PZ-POE46	215PZ-POE46	215PZ-POE46	215PZ-POE46
Housing	H2	H2	H2	H2	H2	H2	H2	H2	H3
Spare Parts									
Compressor single pack	118U3989	118U3988	121L8631	121L8629	121L8635	121L8633	121L8639	121L8637	121L8643
Condenser	118U5218	118U5218	118U5218	118U5218	118U5218	118U5218	118U5218	118U5218	118U5219
Discharge pressure sensor	118U3722	118U3722	118U3722	118U3722	118U3722	118U3722	118U3722	118U3722	118U3722
Fan assembly	-	-	-	-	-	-	-	-	118U3829
Fan blade	118U3481	118U3481	118U3481	118U3481	118U3481	118U3481	118U3481	118U3481	-
Fan capacitor	118U3297	118U3297	118U3297	118U3297	118U3297	118U3297	118U3297	118U3297	-
Fan cowl/grill	118U3484	118U3484	118U3484	118U3484	118U3484	118U3484	118U3484	118U3484	118U3485
Fan motor	118U3823	118U3823	118U3823	118U3823	118U3823	118U3823	118U3823	118U3823	-
Filter drier	023Z5040	023Z5041	023Z5041	023Z5041	023Z5041	023Z5041	023Z5041	023Z5041	023Z5045
High-pressure switch	118U3718	118U3718	118U3718	118U3718	118U3718	118U3718	118U3718	118U3718	118U3718
Liquid valve	009G7022	009G7022	009G7052	009G7052	009G7052	009G7052	009G7052	009G7052	009G7053
Low-pressure switch	118U3720	118U3720	118U3720	118U3720	118U3720	118U3720	118U3720	118U3720	118U3720
Receiver	118U3475	118U3475	118U3475	118U3475	118U3475	118U3475	118U3475	118U3475	118U3476
Sight glass	014L0172	014L0172	014L0173	014L0173	014L0173	014L0173	014L0173	014L0173	014L0174
Suction pressure sensor	118U3721	118U3721	118U3721	118U3721	118U3721	118U3721	118U3721	118U3721	118U3721
Suction valve	009G7021	009G7021	009G7054	009G7054	009G7054	009G7054	009G7054	009G7054	009G7055
Electrical Spare Parts									
Crankcase heater	118U0051	118U0051	120Z5040	120Z5040	120Z5040	120Z5040	120Z5040	120Z5040	120Z5040
Optyma™ Plus Controller	118U3465	118U3465	118U3465	118U3465	118U3465	118U3465	118U3465	118U3465	118U3465
Discharge temperature sensor	084N2007	084N2007	084N2007	084N2007	084N2007	084N2007	084N2007	084N2007	084N2007
Suction and ambient temp sensor	084N0003	084N0003	084N0003	084N0003	084N0003	084N0003	084N0003	084N0003	084N0003
Contactor kit	118U3847	118U3845	118U3848	118U3845	118U3848	118U3846	118U3849	118U3846	118U3849
Door handle	118U3858	118U3858	118U3858	118U3858	118U3858	118U3858	118U3858	118U3858	118U3858
Main switch kit	118U3853	118U3851	118U3854	118U3851	118U3856	118U3852	118U3856	118U3852	118U3857
Run capacitor	-	118U5197*	8173231	-	120Z0051	-	120Z0051	-	8173233
Starting capacitor	-		120Z0399	-	120Z0399	-	120Z0399	-	120Z0040
Starting relay	-		120Z0393	-	120Z0393	-	120Z0393	-	120Z0394
Electrical Characteristics									
Wiring Diagram	WD2	WD2	WD4	WD5	WD4	WD5	WD4	WD5	WD4
LRA Compressor [A]	30	30	60	30	97	45	97	45	127
MCC Compressor [A]	7	8	19	7	25	9.5	26	10	32
Max cont.power [kW]	2.73	1.3	2.53	2.73	3.38	3.33	4.42	4.14	4.89
MCC Fan [A]	0.47	0.47	0.47	0.47	0.47	0.47	0.47	0.47	0.97
Fan Power [W]	1x68	1x68	1x68	1x68	1x68	1x68	1x68	1x68	1x130
Min Fuse rating gL/gG (A)	10	16	25	16	40	20	40	20	50
Accessories (Not Premounted)									
Acoustic hood	-	-	120Z5043	120Z5043	120Z5043	120Z5043	120Z5043	120Z5043	120Z5044
Fusible Plug	118U5170	118U5170	118U5170	118U5170	118U5170	118U5170	118U5170	118U5170	118U5170
Adap-Kool Accessories									
External Diplay & settings	084B8575	084B8575	084B8575	084B8575	084B8575	084B8575	084B8575	084B8575	084B8575
Cable for EKA Displays 6 m	084B7299	084B7299	084B7299	084B7299	084B7299	084B7299	084B7299	084B7299	084B7299
Mounting kit for EKA Display	084B8584	084B8584	084B8584	084B8584	084B8584	084B8584	084B8584	084B8584	084B8584
MODBUS Communication Module	084B8571	084B8571	084B8571	084B8571	084B8571	084B8571	084B8571	084B8571	084B8571
Lon-Bus Communication Module	084B8579	084B8579	084B8579	084B8579	084B8579	084B8579	084B8579	084B8579	084B8579
Programming Key	084B8582	084B8582	084B8582	084B8582	084B8582	084B8582	084B8582	084B8582	084B8582
Sheet Metal									
Top Panel	118U5126	118U5126	118U5126	118U5126	118U5126	118U5126	118U5126	118U5126	118U5131
Fan Panel	118U5127	118U5127	118U5127	118U5127	118U5127	118U5127	118U5127	118U5127	118U5132
Back Panel	118U5128	118U5128	118U5128	118U5128	118U5128	118U5128	118U5128	118U5128	118U5133
Front Panel	118U5129	118U5129	118U5129	118U5129	118U5129	118U5129	118U5129	118U5129	118U5134
Access Panel	118U5130	118U5130	118U5130	118U5130	118U5130	118U5130	118U5130	118U5130	118U5135
Left side Panel	118U5164	118U5164	118U5164	118U5164	118U5164	118U5164	118U5164	118U5164	118U5165
Fan Panel (LH)	-	-	-	-	-	-	-	-	-
Fan Panel (RH)	-	-	-	-	-	-	-	-	-

MCA - Minimum Circuit Ampacity
MCC - Max Continuous Current
LRA - Locked Rotor Amps
* - Spare part, Starting Kit

Designation	MPXM068ML	MPXM080ML	MPXM080ML	MPXM108ML	MPXM125ML	MPXM162ML
Code Number	114X4311	114X4321	114X4324	114X4344	114X4414	114X4434
Compressor Description	MLZ030T4	MLZ038T5	MLZ038T4	MLZ048T4	MLZ058T4	MLZ076T4
Oil	215PZ-POE46	215PZ-POE46	215PZ-POE46	215PZ-POE46	215PZ-POE46	215PZ-POE46
Housing	H3	H3	H3	H3	H4	H4
Spare Parts						
Compressor single pack	121L8641	121L8647	121L8645	121L8651	121L8653	121L8655
Condenser	118U5219	118U5219	118U5219	118U5219	118U5220	118U5220
Discharge pressure sensor	118U3722	118U3722	118U3722	118U3722	118U3722	118U3722
Fan assembly	118U3829	118U3829	118U3829	118U3829	118U3829	118U3829
Fan blade	-	-	-	-	-	-
Fan capacitor	-	-	-	-	-	-
Fan cowl/grill	118U3485	118U3485	118U3485	118U3485	118U3485	118U3485
Fan motor	-	-	-	-	-	-
Filter drier	023Z5045	023Z5045	023Z5045	023Z5045	023Z5046	023Z5046
High-pressure switch	118U3718	118U3718	118U3718	118U3718	118U3718	118U3718
Liquid valve	009G7053	009G7053	009G7053	009G7053	009G7054	009G7054
Low-pressure switch	118U3720	118U3720	118U3720	118U3720	118U3720	118U3720
Receiver	118U3476	118U3476	118U3476	118U3476	118U3926	118U3926
Sight glass	014L0174	014L0174	014L0174	014L0174	014L0175	014L0175
Suction pressure sensor	118U3721	118U3721	118U3721	118U3721	118U3721	118U3721
Suction valve	009G7055	009G7055	009G7055	009G7055	009G7056	009G7056
Electrical Spare Parts						
Crankcase heater	120Z5040	120Z5040	120Z5040	120Z5040	120Z5040	120Z5040
Optyma™ Plus Controller	118U3465	118U3465	118U3465	118U3465	118U3465	118U3465
Discharge temperature sensor	084N2007	084N2007	084N2007	084N2007	084N2007	084N2007
Suction and ambient temp sensor	084N0003	084N0003	084N0003	084N0003	084N0003	084N0003
Contactor kit	118U3847	118U3850	118U3847	118U3848	118U3847	118U3848
Door handle	118U3858	118U3858	118U3858	118U3858	118U3858	118U3858
Main switch kit	118U3852	118U3857	118U3852	118U3854	118U3855	118U3856
Run capacitor	-	8173234	-	-	-	-
Starting capacitor	-	8173001	-	-	-	-
Starting relay	-	120Z0395	-	-	-	-
Electrical Characteristics						
Wiring Diagram	WD5	WD4	WD5	WD5	WD6	WD6
LRA Compressor [A]	60	130	70	87	95	140
MCC Compressor [A]	13	38	15	16	20	25
Max cont.power [kW]	4.88	5.77	5.78	7.55	9.39	11.41
MCC Fan [A]	0.97	0.47	0.97	0.97	2x0.97	2x0.97
Fan Power [W]	1x130	1x130	1x130	1x130	1x130	1x130
Min Fuse rating gL/gG (A)	20	50	20	25	32	40
Accessories (Not Premounted)						
Acoustic hood	120Z5044	120Z5044	120Z5044	120Z5044	120Z5045	120Z5045
Fusible Plug	118U5170	118U5170	118U5170	118U5170	118U5170	118U5170
Adap-Kool Accessories						
External Diplay & settings	084B8575	084B8575	084B8575	084B8575	084B8575	084B8575
Cable for EKA Displays 6 m	084B7299	084B7299	084B7299	084B7299	084B7299	084B7299
Mounting kit for EKA Display	084B8584	084B8584	084B8584	084B8584	084B8584	084B8584
MODBUS Communication Module	084B8571	084B8571	084B8571	084B8571	084B8571	084B8571
Lon-Bus Communication Module	084B8579	084B8579	084B8579	084B8579	084B8579	084B8579
Programming Key	084B8582	084B8582	084B8582	084B8582	084B8582	084B8582
Sheet Metal						
Top Panel	118U5131	118U5131	118U5131	118U5131	118U5136	118U5136
Fan Panel	118U5132	118U5132	118U5132	118U5132	-	-
Back Panel	118U5133	118U5133	118U5133	118U5133	118U5139	118U5139
Front Panel	118U5134	118U5134	118U5134	118U5134	-	-
Access Panel	118U5135	118U5135	118U5135	118U5135	118U5140	118U5140
Left side Panel	118U5165	118U5165	118U5165	118U5165	118U5166	118U5166
Fan Panel (LH)	-	-	-	-	118U5137	118U5137
Fan Panel (RH)	-	-	-	-	118U5138	118U5138

MCA - Minimum Circuit Ampacity
MCC - Max Continuous Current
LRA - Locked Rotor Amps
* - Spare part, Starting Kit

Component type	Component code	Component description	Additional informations
Acoustic Hood	120Z0575	ACOUSTIC HOOD COMP 1CYL	
Acoustic Hood	120Z5043	ACCOUSTIC HOOD - SMALL FRAME	
Acoustic Hood	120Z5044	Acoustic hood for Scroll MLZ compressor	
Acoustic Hood	120Z5045	ACCOUSTIC HOOD, LARGE FRAME	
Acoustic Hood	120Z5052	Sound Cover, LLZ013-018	
Cable for EKA Displays 6 m	084B7299	EKA Accessory	
Capacitor	8173001	CAPACITOR 100µF 330V+R	
Capacitor	8173041	CAPACITOR 30µF 450V	
Compressor Single Pack	118U3914	FH2511Z	
Compressor Single Pack	118U3915	TFH2511Z	
Compressor Single Pack	118U3988	CAJ9510Z - AJ2 range	
Compressor Single Pack	118U3989	TAJ4519Z - AJ2 range	
Compressor Single Pack	118U3991	TAJ4517Z - AJ2 range	
Compressor Single Pack	118U3992	CAJ2446Z - AJ2 range	
Compressor Single Pack	118U3993	CAJ4517Z - AJ2 range	
Compressor Single Pack	118U3994	CAJ4519Z - AJ2 range	
Compressor Single Pack	118U3995	CAJ9513Z - AJ2 range	
Compressor Single Pack	118U3996	CAJ4511Y - AJ2 range	
Compressor Single Pack	120F0226	NTZ048-4LR1B	
Compressor Single Pack	120F0228	NTZ048-5LR1B	
Compressor Single Pack	120F0230	NTZ068-4LR1B	
Compressor Single Pack	120F0232	NTZ068-5LR1B	
Compressor Single Pack	120F0234	NTZ096A4LR1B	
Compressor Single Pack	120F0236	NTZ136A4LR1B	
Compressor Single Pack	121L8629	MLZ015T4LP9A	
Compressor Single Pack	121L8631	MLZ015T5LP9A	
Compressor Single Pack	121L8633	MLZ021T4LP9A	
Compressor Single Pack	121L8635	MLZ021T5LP9A	
Compressor Single Pack	121L8637	MLZ026T4LP9A	
Compressor Single Pack	121L8639	MLZ026T5LP9A	
Compressor Single Pack	121L8641	MLZ030T4LC9A	
Compressor Single Pack	121L8643	MLZ030T5LC9A	
Compressor Single Pack	121L8645	MLZ038T4LC9A	
Compressor Single Pack	121L8647	MLZ038T5LC9A	
Compressor Single Pack	121L8651	MLZ048T4LC9A	
Compressor Single Pack	121L8653	MLZ058T4LC9A	
Compressor Single Pack	121L8655	MLZ076T4LC9A	
Compressor Single Pack	121L9541	LLZ024T4LQ9A	
Compressor Single Pack	121L9543	LLZ034T4LQ9A	
Compressor Single Pack	123B2127	MPT16LA	
Compressor Single Pack	123B2510	MLY80RAb	
Compressor Single Pack	123B2514	MLY90RAb	
Compressor Single Pack	123B2518	MPT12RA	
Compressor Single Pack	123B2704	MPT14RA	
Compressor Single Pack	195B0323	SC12MLX	CU phased out but spare part still available
Compressor Single Pack	195B0332	SC18CLX.2	CU phased out but spare part still available
Compressor Single Pack	195B0345	SC10MLX	CU phased out but spare part still available
Compressor Single Pack	195B0391	SC15MLX	CU phased out but spare part still available
Compressor Single Pack	195B0427	GS26CLX	CU phased out but spare part still available
Compressor Single Pack	195B0435	GS34MFX	CU phased out but spare part still available
Compressor Single Pack	195B0438	GS34MLX	CU phased out but spare part still available
Compressor Single Pack	195B0443	NF7MLX	CU phased out but spare part still available
Compressor Single Pack	195B0624	SC18MLX	CU phased out but spare part still available
Condenser	118U3492	Spare part, A7 MCHX	Phased out & replaced by 118U5217 from SN: -096147CG0419
Condenser	118U3493	Spare part, D7 MCHX	Phased out & replaced by 118U5218 from SN: -096147CG0419
Condenser	118U3494	Spare part, G7 MCHX	Phased out & replaced by 118U5219 from SN: -096147CG0419
Condenser	118U3717	Spare part, J7 MCHX	Phased out & replaced by 118U5220 from SN: -096147CG0420
Discharge pressure sensor	075G1036	Sensor DST P110 (0 to 32 bar SG)	
Suction pressure sensor	075G1013	Sensor DST P110 (-1 to 12 bar SG)	
Electric expansion valve	034G5015	ETS 6-14 Electric expansion valve	
Electric expansion valve coil	034G5145	ETS 6 coil for Ele expansion valve	
Electric expansion valve coil	034G5185	ETS 6 coil for Ele expansion valve	

Component type	Component code	Component description	Additional informations
Contactor kit	118U3845	A 9-30-01-80, DILM07-01, DILM09-01	
Contactor kit	118U3846	A12-30-01-80, DILM12-01	
Contactor kit	118U3847	A 16-30-01-80, DILM15-01	
Contactor kit	118U3848	A 26-30-01-80, DILM17-01	
Contactor kit	118U3849	A 30-30-01-80, DILM25-01	
Contactor kit	118U3850	A 50-30-00-80, DILM32-01	
Crankcase heater	120Z0057	Belt type, 50 W, 230 V, CE mark, UL	
Crankcase heater	120Z0459	PTC heater 27 W, CE mark, UL	
Crankcase heater	120Z5040	Belt type, 70 W, 240 V, CE mark, UL	
Crankcase heater	118U0051	CRANKCASE HEATER 55W	
Discharge pressure sensor	118U3722	AKS 32R 0...32 bar	
Discharge temperature sensor	084N2007	AKS 21 A -70 TIL 160	
Door handle	118U3858	Door handle, ABB-OHB2AJM,MSMN,OXS5X131	
External Diplay & settings	084B8575	EKA 164B, Display, Remote setting	
Fan assembly	118U3829	FAN ASSEMBLIES, EBM, ERP2015	
Fan blade	118U3480	FAN BLADE 14"	
Fan blade	118U3481	FAN BLADE 18"	
Fan capacitor	118U3296	CAPACITOR 1,8 µF	
Fan capacitor	118U3297	CAPACITOR 3,5 µF	
Fan cowl/grill	118U3483	FAN GRILL HOUSING Ø356 mm	
Fan cowl/grill	118U3484	FAN GRILL HOUSING Ø457 mm	
Fan cowl/grill	118U3485	FAN GRILL HOUSING Ø609 mm	
Fan motor (Capacitor not included)	118U3477	FAN MOTOR 25W	
Fan motor (Capacitor not included)	118U3823	FAN MOTOR 68 W	
Fan motor (Capacitor not included)	118U3478	FAN MOTOR 75W	
Filter drier	023Z5039	Filter drier DML 082	
Filter drier	023Z5040	Filter drier DML083	
Filter drier	023Z5041	Filter drier DML084	
Filter drier	023Z5044	Filter drier DML164	
Filter drier	023Z5045	Filter drier DML165	
Filter drier	023Z5046	Filter drier DML166	
High-pressure switch	118U3718	ACB-2UB463W	
Liquid valve	009G7050	GBC 6s Ball Valve M/25	
Liquid valve	009G7051	GBC 10s Ball Valve M/25	
Liquid valve	009G7052	GBC 12s Ball Valve M/25	
Liquid valve	009G7053	GBC 16s Ball Valve M/25	
Liquid valve	009G7054	GBC 18s Ball Valve M/25	
Lon-Bus COM Module	084B8579	EKA175, LON-module	
Low-pressure switch	118U3720	ACB-2UA418W	
Liquid injection controller	118U4010	Spare Part, Module B Plus	
Main switch kit	118U3855	MPCB,MS132-25+HK1-12	
Main switch kit	118U3856	MPCB,MS132-32+HK1-12	
Main switch kit	118U3857	MPCB,MS450-40+HKS4-21	
MODBUS COM Module	084B8571	EKA 178B, Modbus Module	
Mounting kit for EKA Display	084B8584	Mounting kit, EKA display	
MPCB	118U3851	MPCB,MS116-10+HK1-12	
MPCB	118U3852	MPCB,MS116-16+HK1-12	
MPCB	118U3853	MPCB,MS116-6.3+HK1-12	
MPCB	118U3854	MPCB,MS132-20+HK1-12	
Oil	-	POE32 for Light Commercial (MLY / MPT)	
Oil	-	RL32HA/HT for light Commercial (CAJ/FH/TAJ/TFH)	
Oil	120Z0638	1 litre can of 175PZ - POE (NTZ Platform)	CU with a SN above 051220CG3016
Oil	120Z0639	2,5 litre can of 175PZ - POE (NTZ Platform)	CU with a SN above 051220CG3016
Oil	120Z0648	1 litre can of 215PZ - POE46 (MLZ & LLZ Platform)	CU with a SN above 051220CG3016
Optyma Plus Controller	118U3465	OPTYMA PLUS CONTROLLER-084B8080	
Programming Key	084B8582	AKA183A	
Receiver	118U3474	LIQUID RECEIVER 1,3 L	
Receiver	118U3475	LIQUID RECEIVER 3,4 L	
Receiver	118U3476	LIQUID RECEIVER 6,2 L	
Receiver	118U3716	LIQUID RECEIVER 10 L	
Run capacitor	7701035	PSC starting kit, 30 µF, 15 µF	
Run capacitor	8173231	Run capacitor 440V, 40 µF	
Run capacitor	8173233	Run capacitor 440V, 50 µF	
Run capacitor	8173234	Run capacitor 440V, 55 µF	

Component type	Component code	Component description	Additional informations
Run capacitor	120Z0051	Run capacitor 70 µF	
Sight glass	014L0172	Sight Glass, SGP 10 N	
Sight glass	014L0173	Sight Glass, SGP 12 N	
Sight glass	014L0174	Sight Glass, SGP 16 N	
Sight glass	014L0175	Sight Glass, SGP 19 N	
Sight glass	014L0181	Sight Glass, SGP 6s N	
Sight glass	014L0182	Sight Glass, SGP 10s N	
Starting capacitor	123B9215	CAPACITOR 20µF/420V, REF. 309 MET	
Starting capacitor	117U5012	Start capacitor 125 µF, 220V - SC	
Starting capacitor	117U5017	Start capacitor 80 µF, 220V - SC	
Starting capacitor	117U5018	Start capacitor 125 µF, 220V - NF,NL	
Starting capacitor	120Z0040	Start capacitor 161-193 µF	
Starting capacitor	120Z0399	Start capacitor 145-175 µF	
Starting relay	8173022	Starting relay type RVA-6AMKL/3ARR3J4A4	
Starting relay	117U4139	RELAY ASSY. HST - "MRP56EN-6; 117U2121	
Starting relay	120Z0393	Starting relay type RVA9CKL/3ARR3J4A4	
Starting relay	120Z0394	Starting relay type RVA3EKL/3ARR3J24P4	
Starting relay	120Z0395	Starting relay type RVA4GKL/3ARR3J25S4	
Relay	117-7027	SC-RELAY	
Suc & Amb temp sensor	084N0003	Sensor, AKS11	
Suction pressure sensor	118U3721	AKS 32R -1...12 bar	
Suction valve	009G7055	GBC 22s Ball Valve M/25	
Suction valve	009G7056	GBC 28s Ball Valve M/5	
Starting KIT	118U5191	CAJ2446Z _ F1 KIT Capacitor and relay	
Starting KIT	118U5192	CAJ2464Z _ F1 KIT Capacitor and relay	
Starting KIT	118U5193	CAJ4492Y _ F1 KIT Capacitor and relay	
Starting KIT	118U5194	CAJ4511Y _ F1KIT Capacitor and relay	
Starting KIT	118U5195	CAJ4517Z _ F1 KIT Capacitor and relay	
Starting KIT	118U5196	CAJ4519Z _ F1 KIT Capacitor and relay	
Starting KIT	118U5197	CAJ9510Z _ F1 KIT Capacitor and relay	
Starting KIT	118U5198	CAJ9513Z _ F1KIT Capacitor and relay	
Starting KIT	118U5199	FH2511Z _ F1KIT Capacitor and relay	
Start capacitor	123B9316	STARTING CAPACITOR+CC 72-88µF/330V R216	
Run C capacitor	123B9219	RUN CAPACITOR 16µF/420V, REF. 321	
Relay	123B9151	RELAY + CON. BOARD 1158-8 BDG 158S+ NTC	
Start capacitor	123B9315	STARTING CAPACITOR+CC 64-77µF/330V R205	
Run C capacitor	123B9222	RUN CAPACITOR 10µF/420V, REF. 326	
Relay	123B9133	RELAY + CON. BOARD 1149-8 BDG 149S+ NTC	
Start capacitor	117U5373	START CAPACITOR 80 mfd	
Relay	123B9139	RELAY + CON. BOARD 1166-8 BDG 166S+ NTC	
Run C capacitor	123B9226	RUN CAPACITOR 25µF/420V, REF. 310 MET.	
Top Panel H1	118U5121	SPARE PART, SHEET METAL TOP H1	
Fan panel H1	118U5122	SPARE PART, SHEET METAL FAN H1	
Back Panel H1	118U5123	SPARE PART, SHEET METAL BACK H1	
Front Panel H1	118U5124	SPARE PART, SHEET METAL FRONT H1	
Access Panel H1	118U5125	SPARE PART, SHEET METAL ACCESS H1	
Left Side Panel H1	118U5163	SPARE PART, SHEET METAL LEFT SIDE H1	
Top Panel H2	118U5126	SPARE PART, SHEET METAL TOP H2	
Fan panel H2	118U5127	SPARE PART, SHEET METAL FAN H2	
Back Panel H2	118U5128	SPARE PART, SHEET METAL BACK H2	
Front Panel H2	118U5129	SPARE PART, SHEET METAL FRONT H2	
Access Panel H2	118U5130	SPARE PART, SHEET METAL ACCESS H2	
Left Side Panel H2	118U5164	SPARE PART, SHEET METAL LEFT SIDE H2	
Top Panel H3	118U5131	SPARE PART, SHEET METAL TOP H3	
Fan panel H3	118U5132	SPARE PART, SHEET METAL FAN H3	
Back Panel H3	118U5133	SPARE PART, SHEET METAL BACK H3	
Front Panel H3	118U5134	SPARE PART, SHEET METAL FRONT H3	
Access Panel H3	118U5135	SPARE PART, SHEET METAL ACCESS H3	
Left Side Panel H3	118U5165	SPARE PART, SHEET METAL LEFT SIDE H3	
Top Panel H4	118U5136	SPARE PART, SHEET METAL TOP H4	
Fan LH panel H4	118U5137	SPARE PART, SHEET METAL FAN LH H4	
Fan RH panel H4	118U5138	SPARE PART, SHEET METAL FAN RH H4	
Back Panel H4	118U5139	SPARE PART, SHEET METAL BACK H4	
Access Panel H4	118U5140	SPARE PART, SHEET METAL ACCESS H4	
Left Side Panel H4	118U5166	SPARE PART, SHEET METAL LEFT SIDE H4	

OP-LPHM018, OP-LPQM017, OP-MPYM008-009-012-014 & OP-MPHM007-010-012-015-018

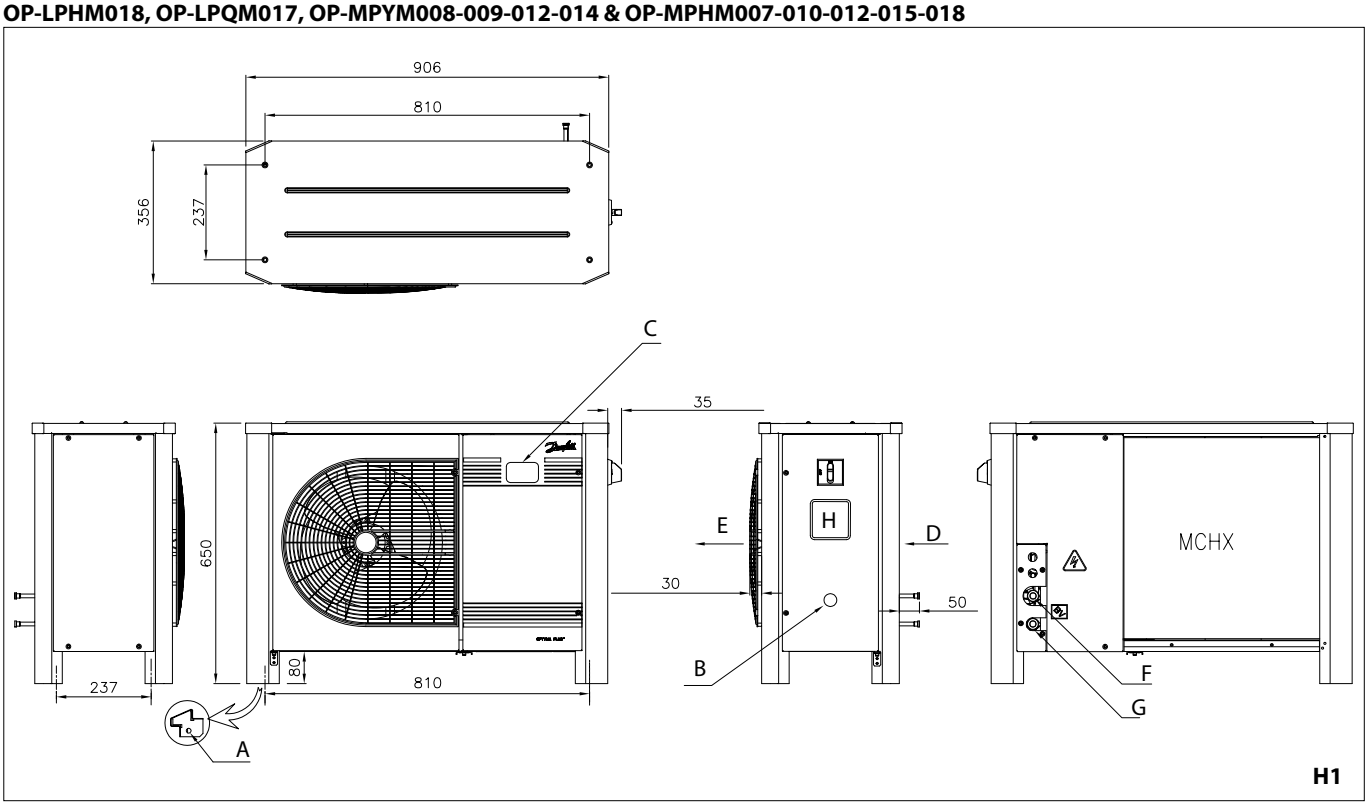

OP-LPQM026-048-068-074 & OP-MPBM018-024-026-034 & OP-MPXM034-046-057 & OP-MPGM033 -34 & OP-MPHM026-034 & OP-LPHM026

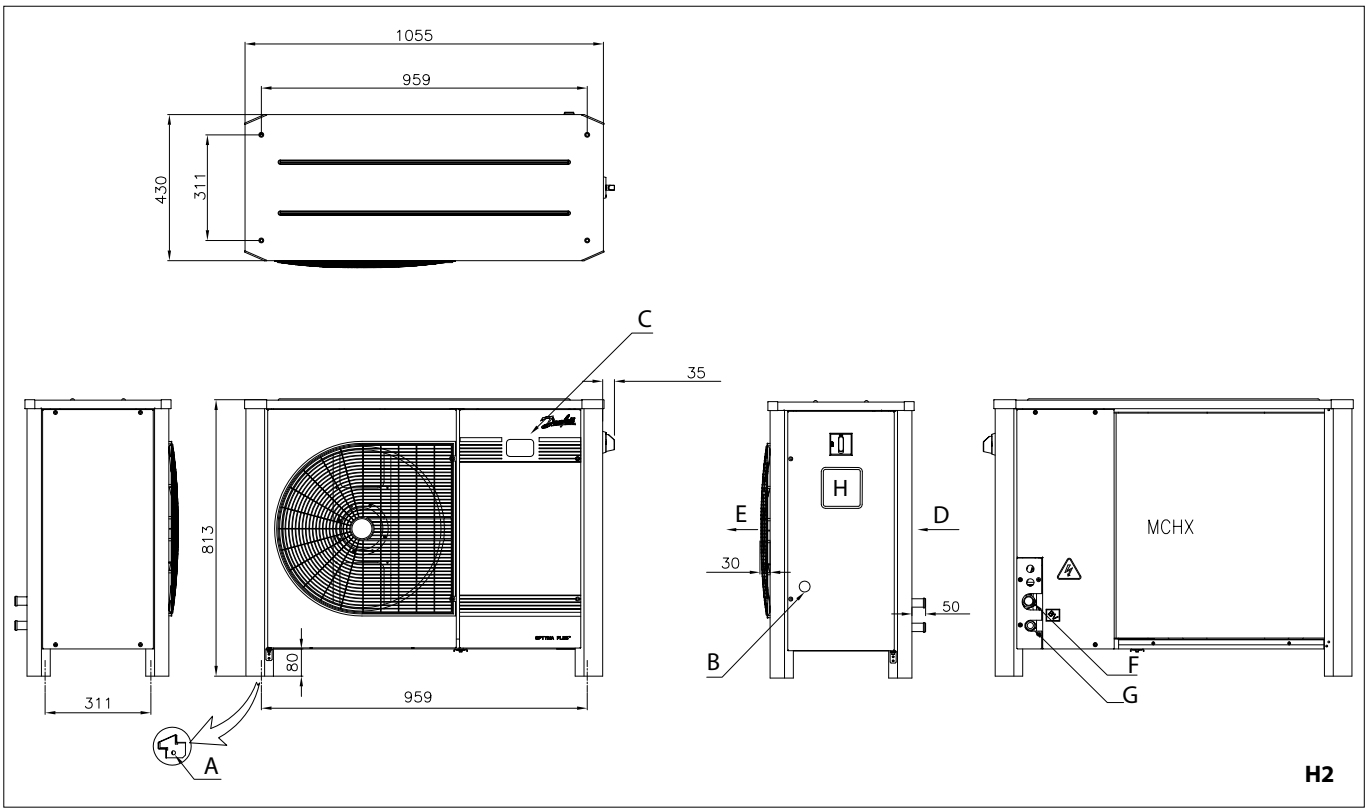

OP-LPQM096-136 & OP-MPXM068-080-108

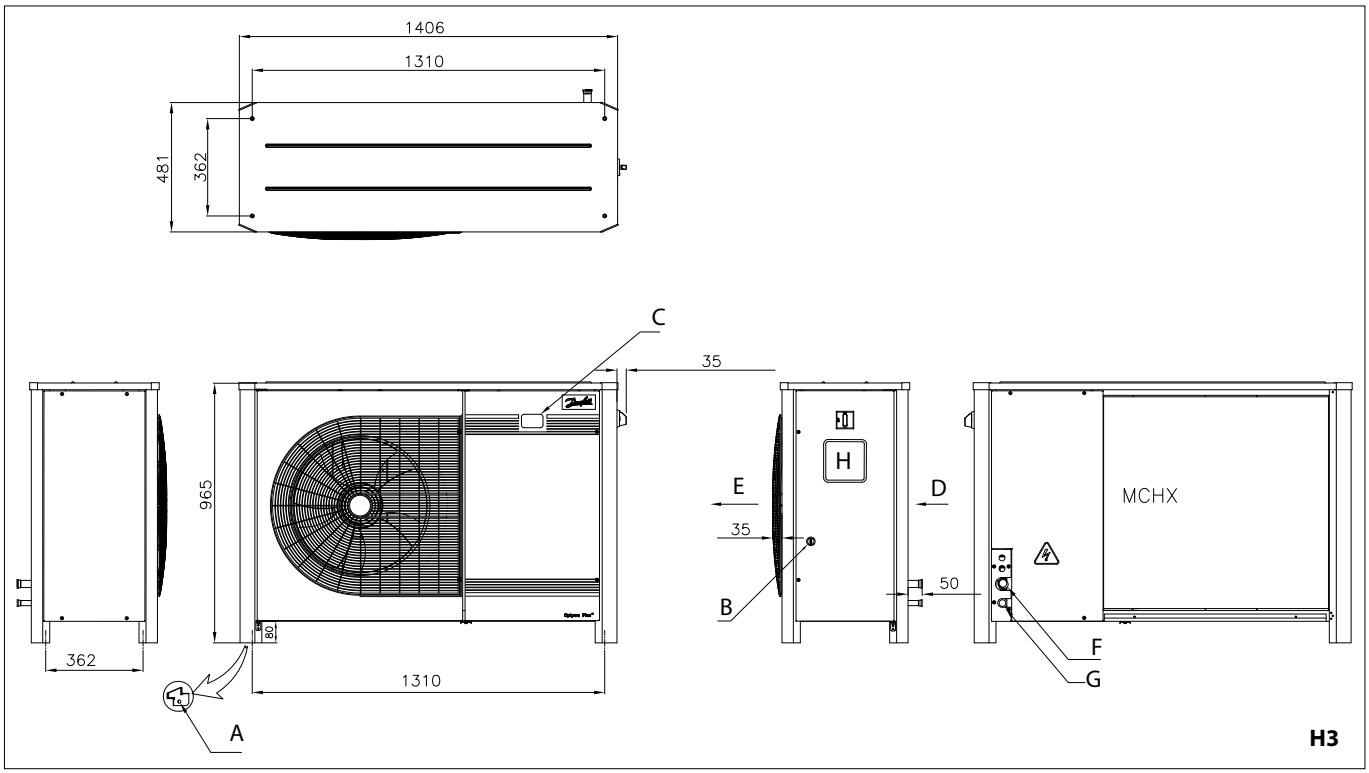

OP-LPQM215-271 & OP-MPXM125-162

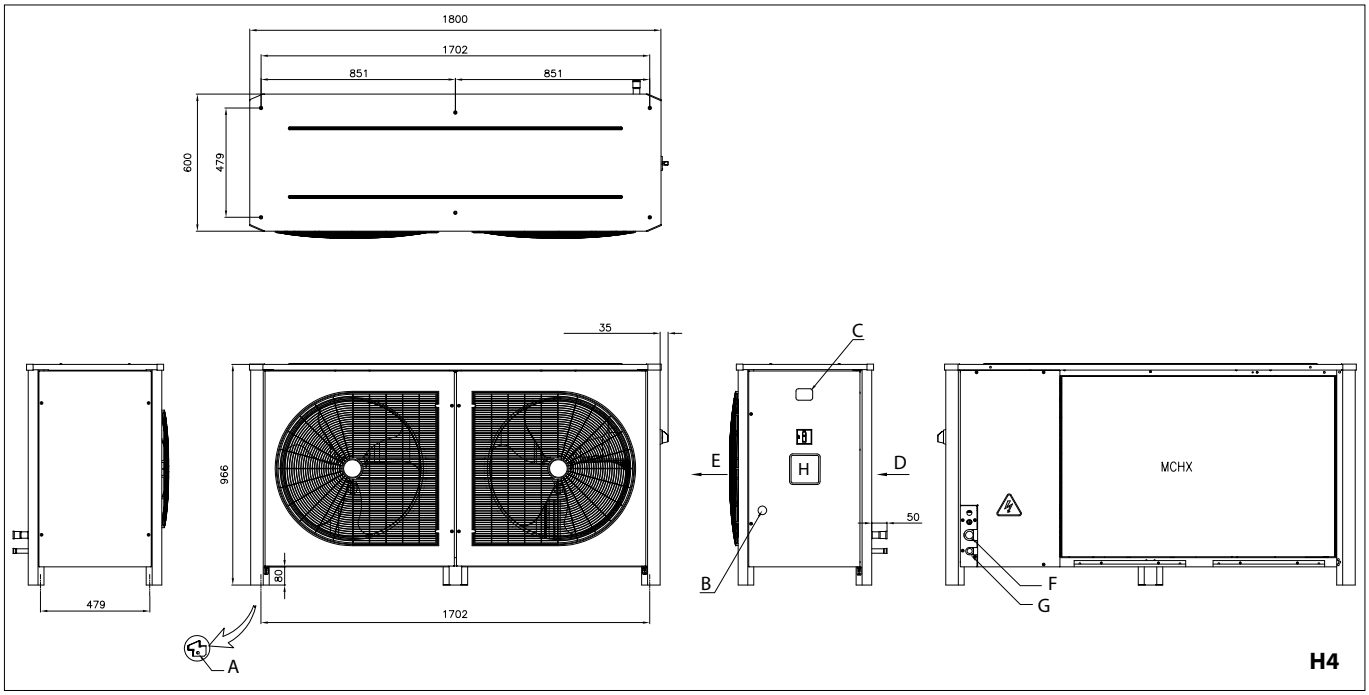

English Legend

A Ø12 Hole for Mounting
B Sight Glass
C Controller Display
D Air in
E Air out
F Suction Port
G Liquid Port

Electrical Cables

Note: all dimension are in mm

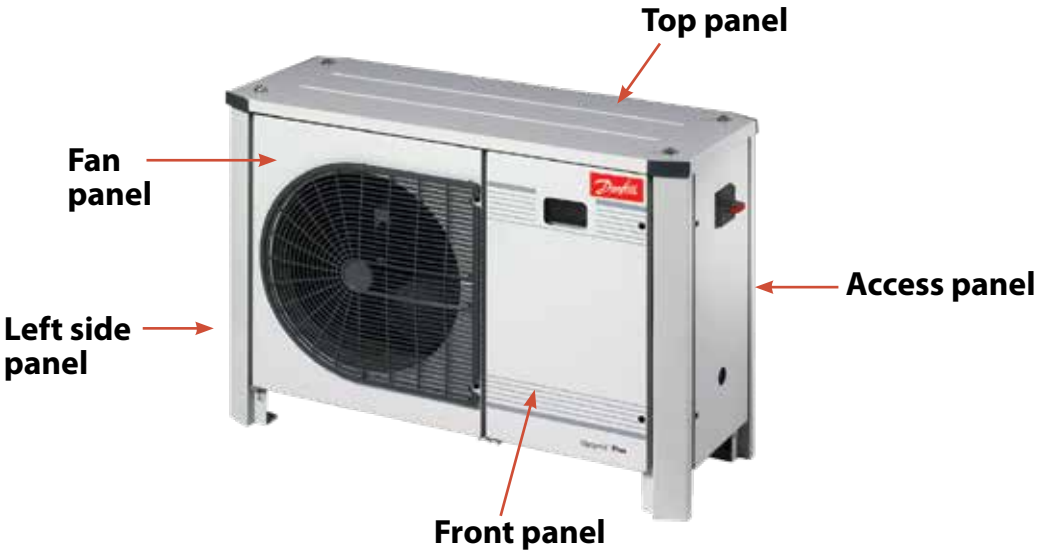
Top panel
Fan panel
Access panel
Left side panel
Front panel

Back panel

Code G : OP-LPQM026-048-068-074 &, OP-MPGM033-34 & OP-LPHM026, OP-MPBM018-024-026-034

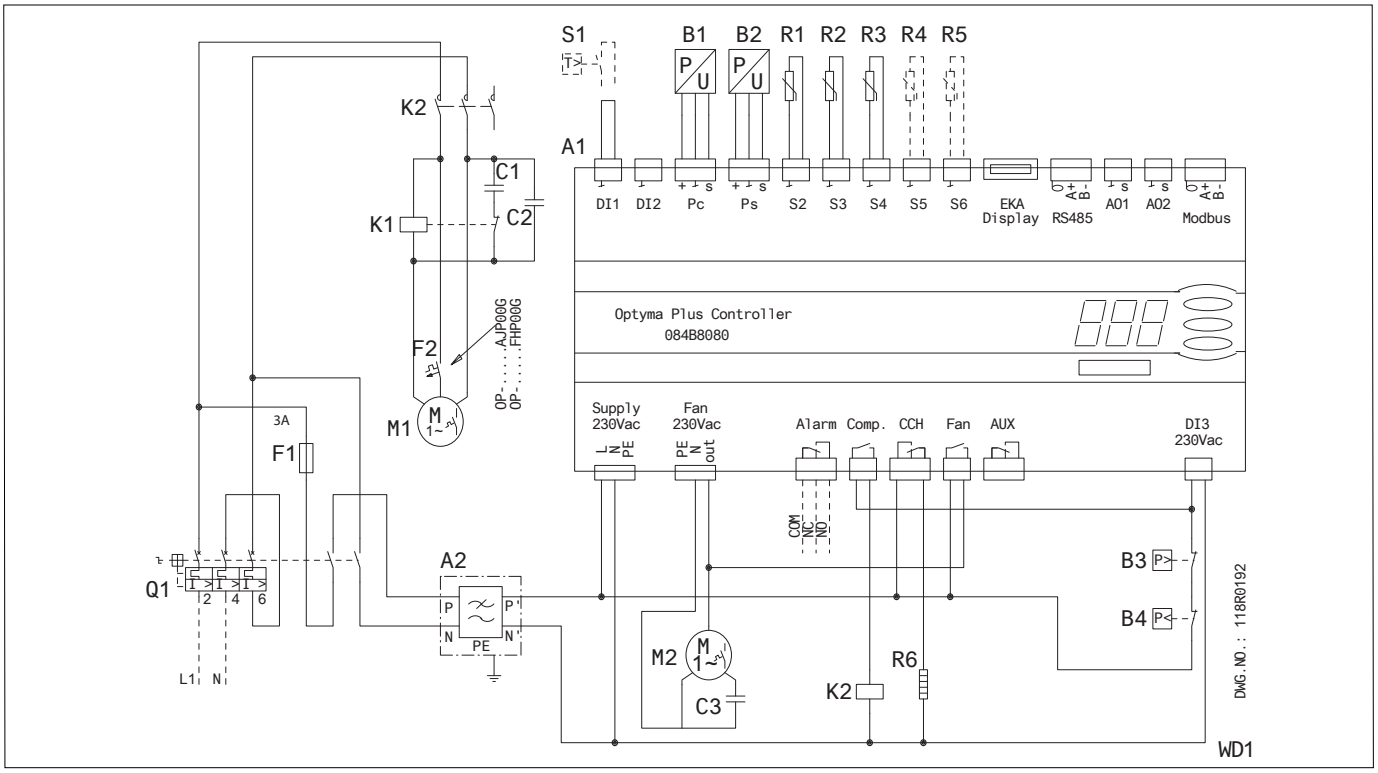

Code G : OP-MPXM034-046-057-068-080

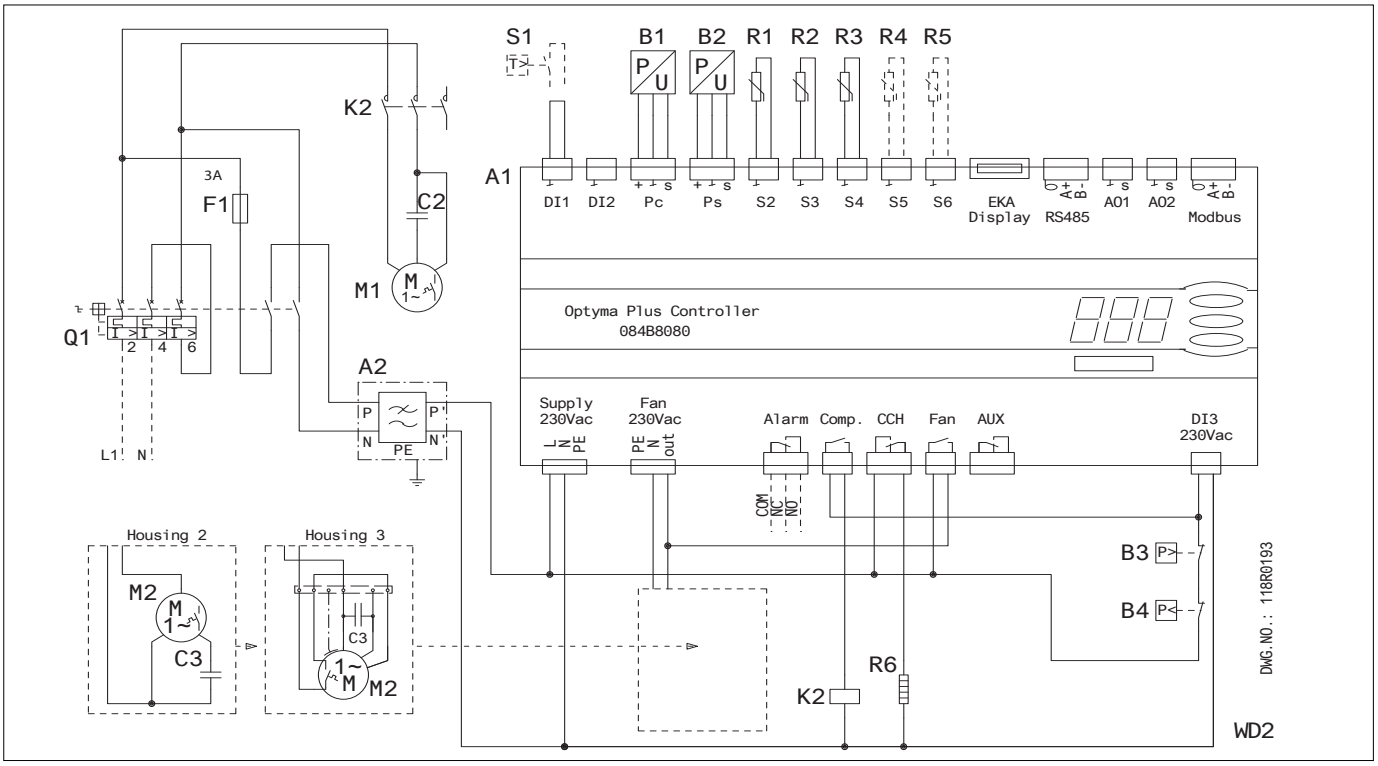

Code E : OP-LPQM048-068-074-096-136 & OP-MPXM034-046-057-068-080-108 & OP-MPBM026-034

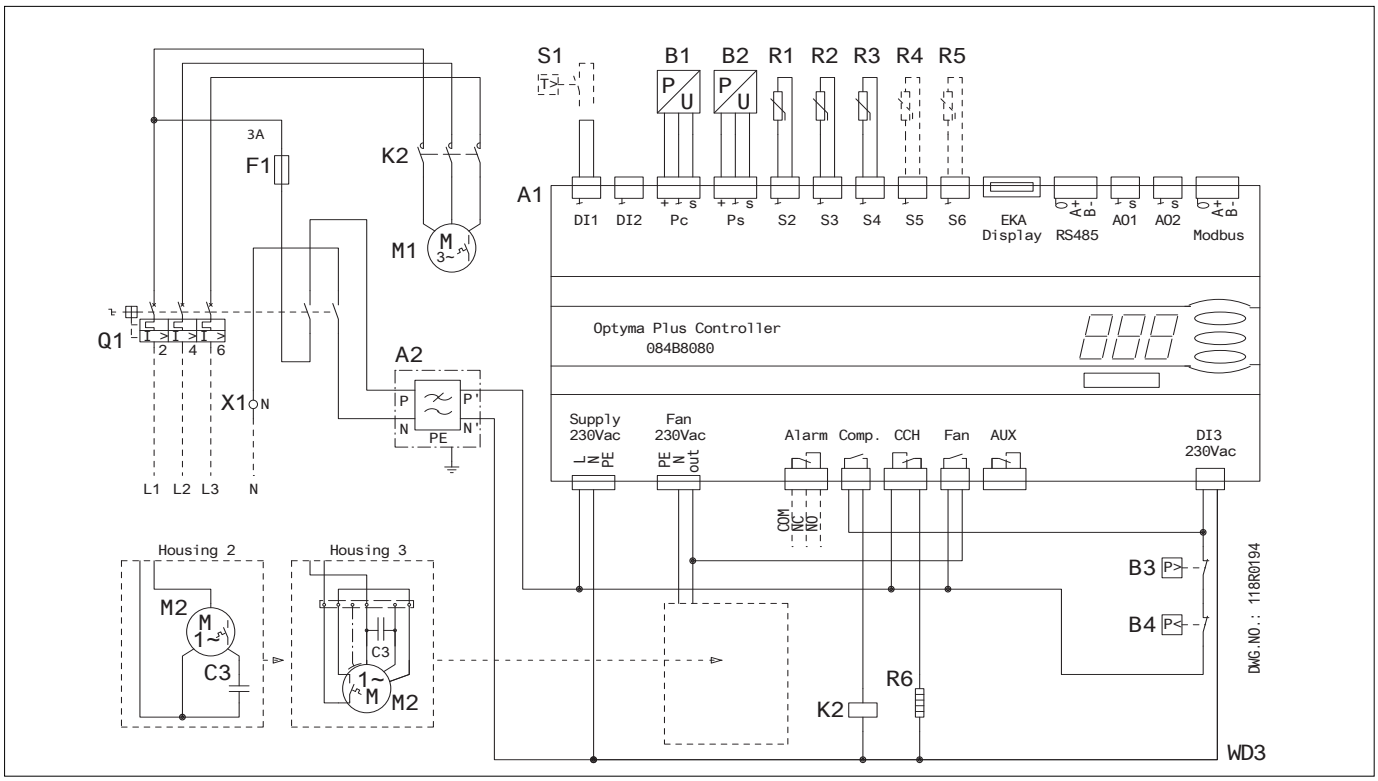

Code E : OP-LPQM215-271 & OP-MPXM125-162

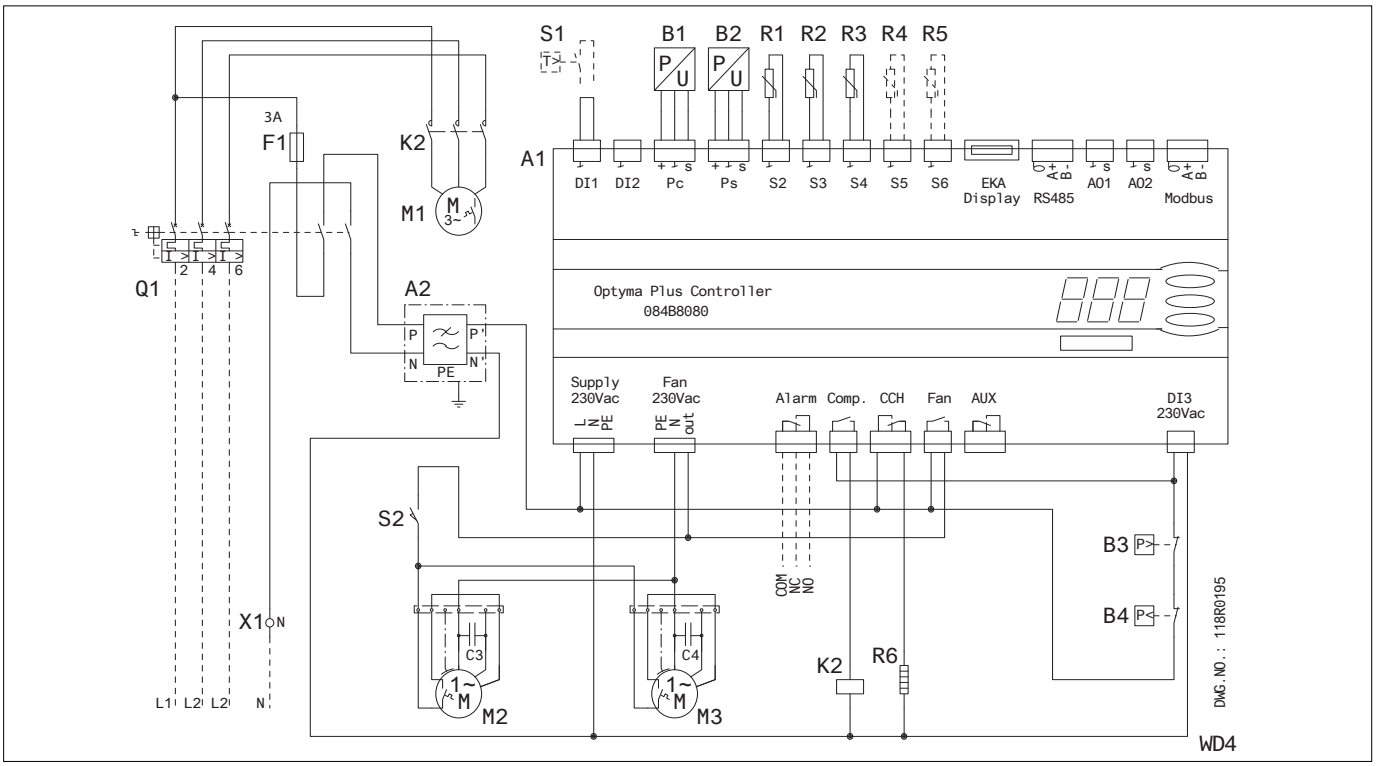

Code G: OP-LPQM017 & OP-MPYM008-009-012-014

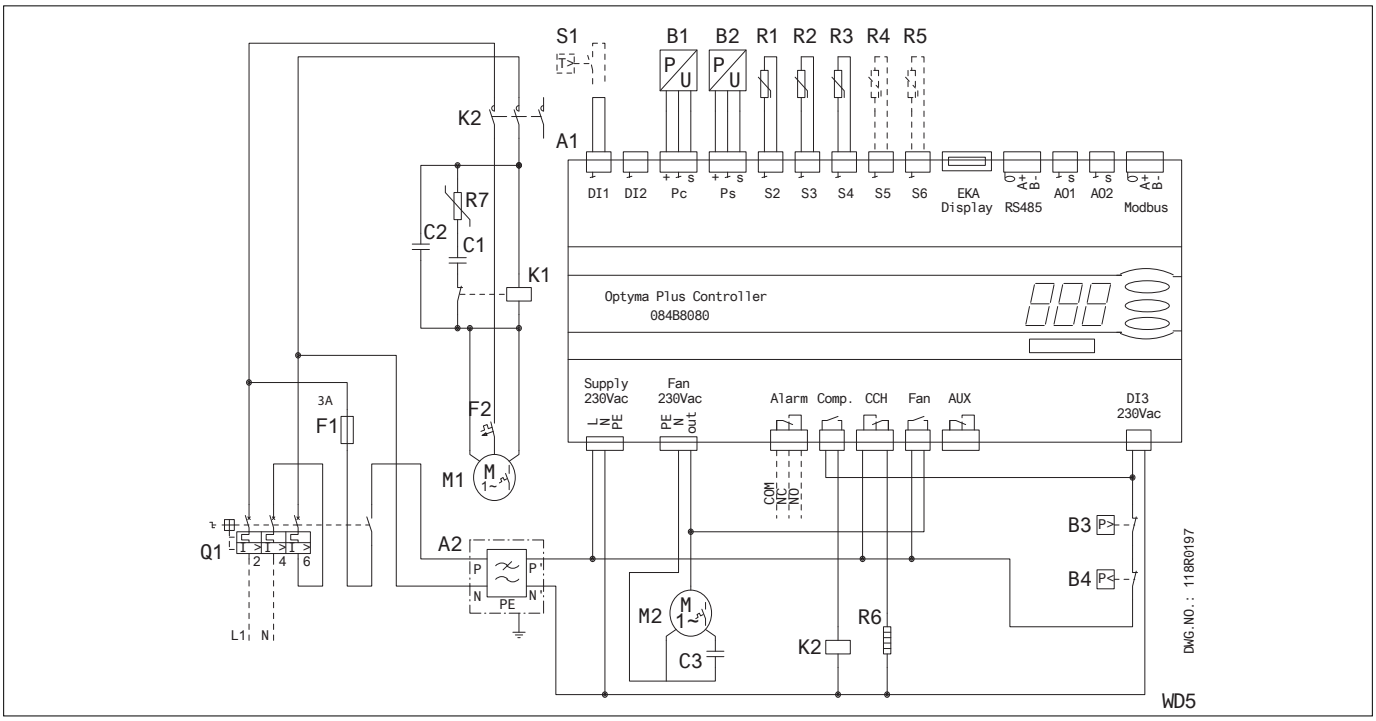

Code E: OP-LPOM067-084-098

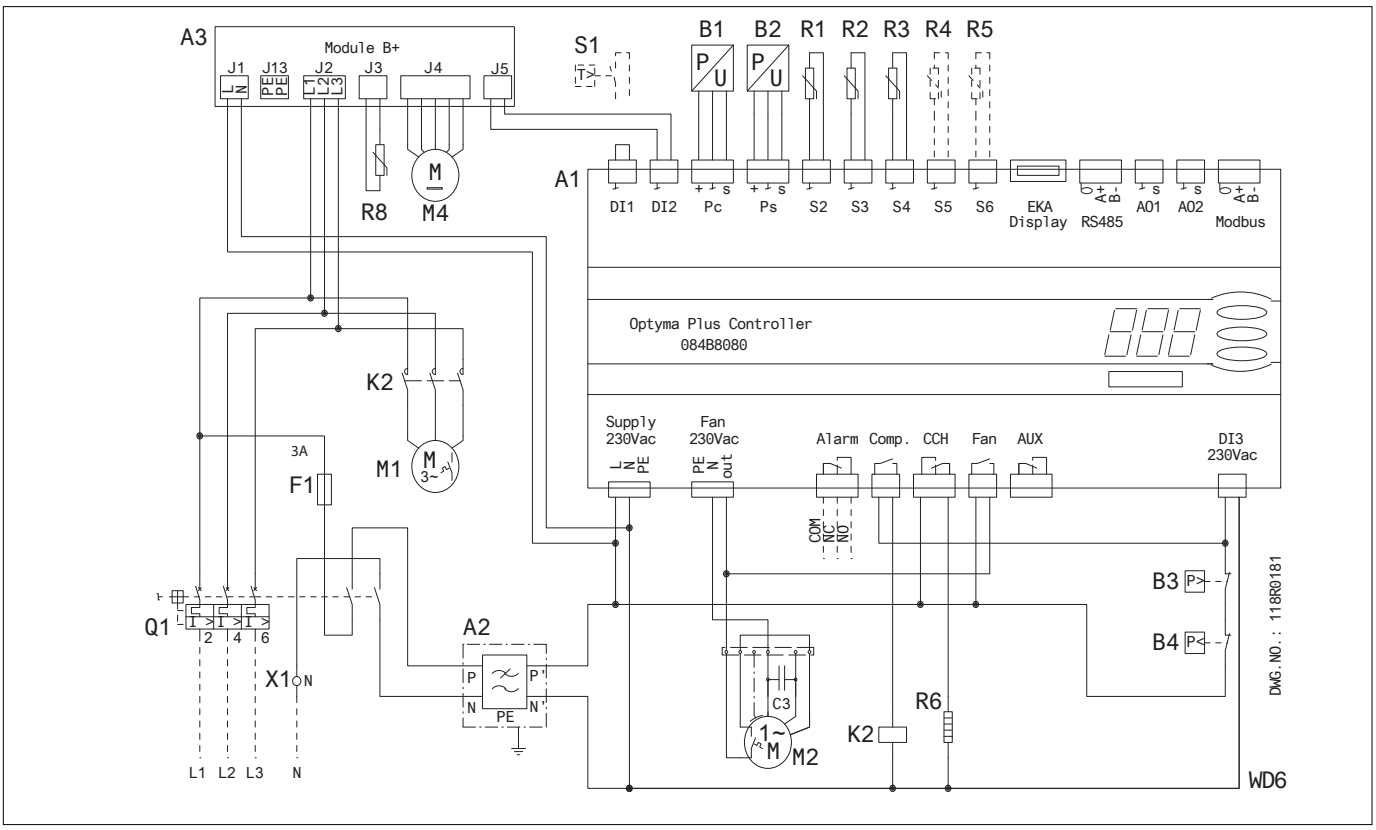

Code E: OP-LPOM120-168

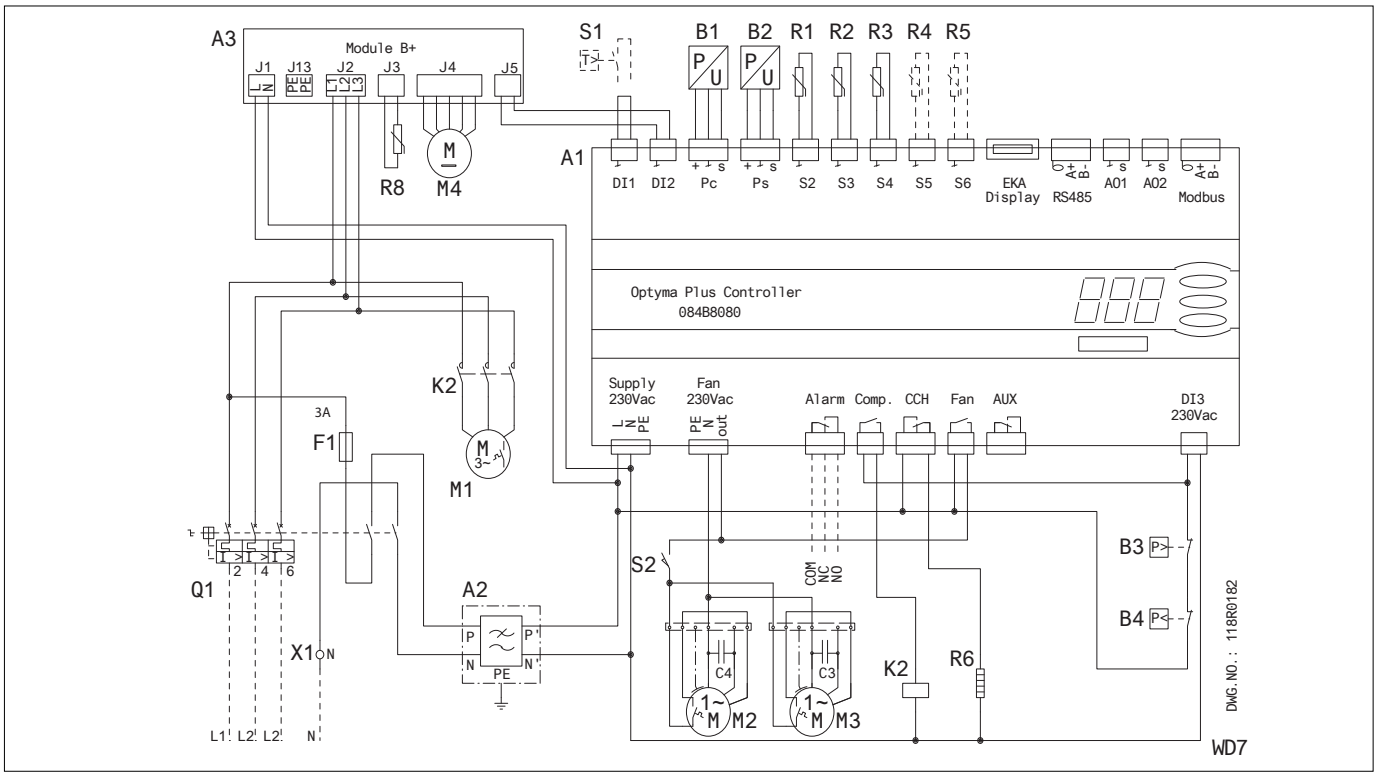

English Legend

A1 : Optyma™ Plus Controller
A2 : EMI Filter
A3 : Liquid Injection Controller
B1,B5 : Condensing Pressure Transducer
B2 : Suction Pressure Transducer
B3 : High Pressure Switch (OFF = 31bar(g), ON = 24bar(g))
B4 : Low Pressure Switch (OFF = -0,3bar(g), ON = 0,5bar(g))
C1 : Start Capacitor (Compressor)
C2 : Run Capacitor (Compressor)
C3 : Run Capacitor (Fan 1)
C4 : Run Capacitor (Fan 2)
F1 : Fuse (Control Circuit)
F2,F3 : Motor protector
K1 : Start Relay
K2 : Contactor
M1 : Compressor
M2 : Fan Motor 1
M3 : Fan Motor 2
M4 : Electronic Expansion Valve
Q1 : Main Switch
R1 : Ambient Temp. Sensor
R2,R8 : Discharge Temp. Sensor
R3 : Suction Temp. Sensor
R4,R5 : Auxiliary Temp. Sensor (optional)
R6 : Crankcase Heater
R7 : NTC Resistor
S1 : Room Thermostat (optional)
S2 : Door Limit Switch
X1 : Terminal
Supply : Supply
Fan : Fan
Alarm : Alarm
Comp. : Compressor
CCH : Crankcase Heater
Aux : Auxiliary

Optyma™ Plus INVERTER
Capacity modulation in a simple and **adaptive** package

Combines our market-leading expertise in condensing unit design with the unique benefits of stepless inverter scroll technology. The result is energy consumption reduced by up to 30% with better food preservation.

Best SEPR with stepless modulation reduces energy consumption by up to

30%

Quick and safe installation and service

Preset parameters and Modbus communication makes start-up and maintenance of the condensing unit effortlessly quick and easy.

High SEPR*: 3.84 – certified by ASERCOM

All models in the range are highly efficient and well above EcoDesign 2018 thresholds, contributing to a reduction in energy costs.
**SEPR: Seasonal Energy Performance Ratio.*

Accurate temperature control

Accurate temperature control and low in-rush current result in a more stable storage temperature and longer product shelf life.

Extended capacity

Stepless compressor modulation - able to slow down and speed up from 30 to 100 RPS to save energy and match load fluctuations very accurately. The inverter drive incorporates smart logic to increase reliability during operation.

Designed for **ultimate efficiency**

Stepless capacity modulation
From 30 to 100 rps modulation leads to 20-30% higher energy efficiency compared to fixed-speed condensing units.

Simple commissioning
Preset drive parameters with dedicated refrigeration software.

Future-proof
Working with lower GWP refrigerants such as R448A and R449. Also compatible with R407A/F and R404A.

Danfoss compressor and drive package
Dedicated to refrigeration with years of market application and validation.

Full intelligent control through the Optyma™ Plus Controller
Control, alarm management, day & night operation, can connect to ADAP-KOOL® software, etc.

Simple plug-and-play installation
Safe, simple and hassle-free installation with tried-and-tested components.

High SEPR/COP **cuts energy costs**

E.g. in a cold room where meat is stored and with 9 kW of cooling capacity.

Optyma™ Plus INVERTER MBP unit vs mechanically modulated technology*

Cooling cap.: 9 kW
Refrigerant: R407F

UNIT	Danfoss	Market
SEPR	3.84	2.50
USAGE	~ 14 000 kWh	~ 21 600 kWh

Annual energy consumption saved: 7 600 kWh

Savings based on cost of energy:

Savings based on cost of energy in the UK:
£0.13/ 1 KWH = 7 600 X 0.13 = £988

£988 annual electricity savings made by your customer in UK

* Source: Danfoss

Model	Code	Version	Compressor	Electrical code (1)	Compressor speed, rps	Tamb [°C]	Cooling capacity Q [kW] (2) Te [°C] -15 °C	-10 °C	-5 °C	0 °C	5 °C	EcoDesign (3) Q [kW]	P [kW]	COP	SEPR	Sound power level dB(A)	Sound pressure level 10 m dB(A)
OP-MPPM028VVL	114X4302	P01	VLZ028TGA	E	30	27	1.465	1.839	2.276	2.783	3.365					72	41
						32	1.375	1.732	2.149	2.633	3.190						
						38	-	-	-	-	-						
						43	-	-	-	-	-						
					50	27	2.494	3.107	3.816	4.629	5.553					72	41
						32	2.346	2.930	3.605	4.379	5.259						
						38	-	2.706	3.338	4.064	4.891						
						43	-	-	3.106	3.790	4.571						
					75	27	3.656	4.527	5.536	6.695	8.013					73	42
						32	3.443	4.270	5.226	6.324	7.573						
						38	-	3.949	4.842	5.866	7.032						
						43	-	-	4.509	5.472	6.569						
					100	27	4.686	5.774	7.041	8.502	10.171					74	43
						32	4.421	5.451	6.648	8.028	9.605	5.548	3.058	1.81	3.38		
						38	-	5.056	6.170	7.454	8.922						
						43	-	-	5.761	6.967	8.346						
OP-MPPM035VVL	114X4316	P01	VLZ035TGA	E	30	27	1.837	2.303	2.848	3.479	4.205					72	41
						32	1.723	2.167	2.686	3.287	3.978						
						38	-	-	-	-	-						
						43	-	-	-	-	-						
					50	27	3.094	3.851	4.719	5.708	6.824					72	41
						32	2.899	3.621	4.448	5.389	6.452						
						38	-	3.332	4.108	4.991	5.989						
						43	-	-	3.813	4.646	5.588						
					75	27	4.512	5.579	6.805	8.202	9.777					74	43
						32	4.234	5.247	6.409	7.732	9.225						
						38	-	4.837	5.921	7.154	8.548						
						43	-	-	5.501	6.660	7.970						
					100	27	5.784	7.106	8.637	10.392	12.381					74	43
						32	5.450	6.698	8.141	9.795	11.673	6.829	3.826	1.78	3.30		
						38	-	6.201	7.540	9.075	10.820						
						43	-	-	7.029	8.466	10.101						
OP-MPPM044VVL	114X4334	P01	VLZ044TGA	E	30	27	2.364	2.954	3.637	4.422	5.317					72	41
						32	2.213	2.776	3.429	4.180	5.037						
						38	-	-	-	-	-						
						43	-	-	-	-	-						
					50	27	3.894	4.834	5.915	7.145	8.532					74	43
						32	3.650	4.544	5.570	6.739	8.058						
						38	-	4.185	5.144	6.238	7.473						
						43	-	-	4.779	5.808	6.973						
					75	27	5.674	7.003	8.510	10.203	12.087					74	43
						32	5.308	6.572	8.003	9.609	11.397						
						38	-	6.034	7.371	8.873	10.544						
						43	-	-	6.825	8.237	9.810						
					100	27	7.289	8.959	10.828	12.899	15.173					74	43
						32	6.786	8.375	10.149	12.112	14.265	8.558	4.753	1.8	3.73		
						38	-	7.634	9.291	11.123	13.130						
						43	-	-	8.539	10.260	12.145						

MBP
(1) E - Compressor 400V/3~/50Hz, fan 230V/1~/50Hz
(2) Nominal conditions (EN13215), Evaporating temperatures at dew point, Superheat 10K, Subcooling 0K
(3) Rated conditions (EN13215), Evaporating temperature (dew point) -10°C, Ambient air temperature +32°C, Return Gas Temperature 20°C, Subcooling 0K
SEPR, Seasonal Energy Performance Ratio
Q [kW], Cooling Capacity
P [kW], Power Input

For regular updates and detailed capacities, please refer to **Coolselector®2** software

Model	Code	Version	Compressor	Electrical code (1)	Compressor speed, rps	Tamb [°C]	Cooling capacity Q [kW] (2) Te [°C] -15 °C	-10 °C	-5 °C	0 °C	5 °C	EcoDesign (3) Q [kW]	P [kW]	COP	SEPR	Sound power level dB(A)	Sound pressure level 10 m dB(A)
OP-MPPM028VVL	114X4302	P01	VLZ028TGA	E	30	27	1.597	1.990	2.446	2.972	3.573					72	41
						32	1.484	1.854	2.284	2.780	3.349						
						38	-	-	-	-	-						
						43	-	-	-	-	-						
					50	27	2.700	3.340	4.080	4.929	5.894					72	41
						32	2.505	3.106	3.802	4.601	5.510						
						38	-	2.820	3.461	4.198	5.039						
						43	-	2.574	3.168	3.853	4.636						
					75	27	3.994	4.916	5.976	7.181	8.542					73	42
						32	3.707	4.574	5.569	6.701	7.981						
						38	-	4.151	5.066	6.110	7.290						
						43	-	3.785	4.633	5.600	6.698						
					100	27	5.202	6.381	7.724	9.241	10.939					74	43
						32	4.832	5.939	7.198	8.620	10.214	6.250	3.328	1.88	3.47		
						38	-	5.384	6.539	7.845	9.310						
						43	-	4.899	5.965	7.171	8.528						
OP-MPPM035VVL	114X4316	P01	VLZ035TGA	E	30	27	2.027	2.517	3.085	3.739	4.485					72	41
						32	1.878	2.339	2.875	3.491	4.196						
						38	-	-	-	-	-						
						43	-	-	-	-	-						
					50	27	3.402	4.193	5.108	6.153	7.338					72	41
						32	3.158	3.899	4.755	5.735	6.846						
						38	-	3.533	4.317	5.215	6.236						
						43	-	3.215	3.937	4.766	5.711						
					75	27	4.962	6.087	7.381	8.853	10.511					74	43
						32	4.610	5.659	6.866	8.240	9.790						
						38	-	5.126	6.226	7.481	8.899						
						43	-	4.662	5.672	6.826	8.133						
					100	27	6.354	7.768	9.389	11.226	13.287					74	43
						32	5.901	7.218	8.727	10.438	12.360	7.614	4.088	1.86	3.77		
						38	-	6.529	7.901	9.460	11.214						
						43	-	5.926	7.183	8.614	10.227						
OP-MPPM044VVL	114X4334	P01	VLZ044TGA	E	30	27	2.620	3.236	3.949	4.767	5.698					72	41
						32	2.426	3.008	3.681	4.453	5.334						
						38	-	-	-	-	-						
						43	-	-	-	-	-						
					50	27	4.322	5.303	6.426	7.700	9.134					74	43
						32	4.012	4.932	5.987	7.183	8.532						
						38	-	4.470	5.439	6.541	7.784						
						43	-	4.067	4.964	5.985	7.139						
					75	27	6.267	7.656	9.231	10.997	12.960					74	43
						32	5.812	7.111	8.583	10.234	12.070						
						38	-	6.432	7.777	9.289	10.972						
						43	-	5.839	7.078	8.472	10.027						
					100	27	8.008	9.755	11.715	13.888	16.273					74	43
						32	7.406	9.033	10.856	12.879	15.102	9.560	5.220	1.83	3.76		
						38	-	8.128	9.785	11.626	13.651						
						43	-	7.335	8.852	10.539	12.399						

MBP
(1) E - Compressor 400V/3~/50Hz, fan 230V/1~/50Hz
(2) Nominal conditions (EN13215), Evaporating temperatures at dew point, Superheat 10K, Subcooling 0K
(3) Rated conditions (EN13215), Evaporating temperature (dew point) -10°C, Ambient air temperature +32°C, Return Gas Temperature 20°C, Subcooling 0K
SEPR, Seasonal Energy Performance Ratio
Q [kW], Cooling Capacity
P [kW], Power Input

For regular updates and detailed capacities, please refer to **Coolselector®2** software

EcoDesign 2018

Optyma™ Plus INVERTER - Technical data

Application	Code number	Model number	Compressor Model	Electrical Code (1)	Refrigerant (2)	Condenser Coil			Fan		Receiver	Dimensions				Connection		Weight	
						Type	Airflow	Internal Volume	Number	Blade ø	Volume	Housing	Height	Width	Length	Suction valve	Liquid valve	Gross	Net
	P01						(m³/h)	(dm³)		(mm)	(L)		mm	mm	mm	inch	inch	Kg	Kg
MBP	114X4302	OP-MPPM028VVLP01E	VLZ028TGA	E	P	G7	5200	1.62	1	500	6.2	H3	965	1406	481	3/4″	5/8″	150	124
MBP	114X4316	OP-MPPM035VVLP01E	VLZ035TGA	E	P	G7	5200	1.62	1	500	6.2	H3	965	1406	481	3/4″	5/8″	151	125
MBP	114X4334	OP-MPPM044VVLP01E	VLZ044TGA	E	P	G7	5200	1.62	1	500	6.2	H3	965	1406	481	3/4″	5/8″	151	125

(1) E - Compressor 400V/3~/50Hz, fan 230V/1~/50Hz
(2) P - R448A, R449A, R407A, R407F, R404A

Optyma™ Plus INVERTER - Spare parts & accessories - MBP

Designation	OP-MPLM028	OP-MPPM028	OP-MPLM035	OP-MPPM035	OP-MPLM044	OP-MPPM044
Code Number	114X4300*	114X4302	114X4315*	114X4316	114X4333*	114X4334
Compressor Description	VLZ028TGA		VLZ035TGA		VLZ044TGA	
Compressor oil	120Z5034	120Z0648	120Z5034	120Z0648	120Z5034	120Z0648
Spare Parts						
Compressor	120G0162		120G0159		120G0156	
Condenser	118U5219		118U5219		118U5219	
Oil separator	118U3981		118U3981		118U3982	
Fan assembly	118U3829		118U3829		118U3829	
Fan cowl/grill	118U3485		118U3485		118U3485	
Filter	023Z5045		023Z5045		023Z5045	
High-pressure switch	118U3718		118U3718		118U3718	
Low-pressure switch	118U3720		118U3720		118U3720	
Receiver	118U3476		118U3476		118U3476	
Sight glass	014F0174		014F0174		014F0174	
Suction line valve	009G7054		009G7054		009G7054	
Liquid line valve	009G7053		009G7053		009G7053	
Electrical Spare Parts						
Crankcase heater	120Z5040		120Z5040		120Z5040	
Controller	118U3465		118U3465		118U3465	
Discharge temperature sensor	084N2007		084N2007		084N2007	
High-pressure transmitter	118U3722		118U3722		118U3722	
Low-pressure transmitter	118U3721		118U3721		118U3721	
Suction and ambient temp sensor	084N0003		084N0003		084N0003	
Compressor contact	118U3847		118U3847		118U3847	
Door handle	118U3858		118U3858		118U3858	
Main switch	118U3852	118U3854	118U3852	118U3854	118U3852	118U3854
Compressor drive CDS803	118U3973		118U3973		118U3973	
EMI filter (Drive)	118U3972		118U3972		118U3972	
EMI filter (Controller)	118U3974		118U3974		118U3974	
Electrical Characteristics						
MCC Compressor [A] 400V/3phase	8.1		9.8		12.0	
Max cont.power consumption [kW]	3.98		4.94		6.33	
MCC Fan [A] 230V/1 phase	0.96		0.96		0.96	
Fan power output [W]	1x130		1x130		1x130	
Fan power consumption [W]	1x220		1x220		1x220	
Accessories (Not Premounted)						
Acoustic hood	120Z5043		120Z5043		120Z5043	
Sheet Metal						
Top panel	118U5131		118U5131		118U5131	
Fan Panel	118U5132		118U5132		118U5132	
Back panel	118U5133		118U5133		118U5133	
Front panel	118U5134		118U5134		118U5134	
Access panel	118U5135		118U5135		118U5135	
Left side panel	118U5165		118U5165		118U5165	

MCC - Max Continuous Current
*Phased out model

NOTICE For service purpose original components (spare parts) recommended by Danfoss should be used.

Component type	Component code	Component description	Additional informations
Compressor Single pack	120G0162	Compresssor VLZ028TGNE9A/M	
Compressor Single pack	120G0159	Compresssor VLZ035TGNE9A/M	
Compressor Single pack	120G0156	Compresssor VLZ044TGNE9A/M	
Condenser	118U5219	SPare part, 9513 B3, H3, G7 MCHX	
Oil Separator	118U3981	SEPARATEUR HUILE SO/ER-31 OPTYMA INVERT	
Oil separator	118U3982	SEPARATEUR HUILE SO/ER16101 OPTYMA INVER	
Fan assembly	118U3829	FAN ASSEMBLIES, EBM, ERP2015	
Fan cowl/grill	118U3485	FAN GRILL HOUSING 3 OP PLUS	
Filter	023Z5045	Filter drier DML 165 M/12	
High-pressure switch	118U3718	HIGH PR SWITCH ACB-2UB463W	
Low-pressure switch	118U3720	LOW PR SWITCH ACB-2UA418W	
Receiver	118U3476	LIQUID RECEIVER 6,2L OP PLUS	
Sight glass	014F0174	Del-SGN+ 16 Sight Glass M/36	
Suction valve	009G7054	GBC 18s Ball Valve M/25	
Liquid valve	009G7053	GBC 16s Ball Valve M/25	
Crankcase heater	120Z5040	CRANKCASE HEATER, 240V 70W	
Controller	118U3465	OPTYMA PLUS CONTROLLER-084B8080	
Discharge temperature sensor	084N2007	Sensor AKS 21 A 2.5m	
High-pressure transmitter	118U3722	AKS HP PR TRANSMITTER	
Low-pressure transmitter	118U3721	AKS LP PR TRANSMITTER	
Suction and ambient temp sensor	084N0003	Sensor AKS 11 3.5m	
Compressor contact	118U3847	CONT, ABB-A16-30-01-80+CA5-11	
Door handle	118U3858	HANDLE, ABB-OHB2AJM,MSMN,OXS5X131	
Compressor drive CDS803	118U3973	Drive CDS803 7,5kW H OPTYMA INVERTER	
EMI filter (Drive)	118U3972	Filtre pour Drive EN 55011 class B (C1)	
EMI filter (Controller)	118U3974	CONTROLLER EMC/RFI FILTER OPTYMA PLUS	
Top Panel	118U5131	SPARE PART, SHEET METAL TOP H3	
Fan panel	118U5132	SPARE PART, SHEET METAL FAN H3	
Back panel	118U5133	SPARE PART, SHEET METAL BACK H3	
Front Panel	118U5134	SPARE PART, SHEET METAL FRONT H3	
Access Panel	118U5135	SPARE PART, SHEET METAL ACCESS H3	
Left Side panel	118U5165	SPARE PART, SHEET METAL LEFT SIDE H3	
Main switch	118U3852	MPCB, ABB-MS116-16+HK1-12	
Main switch	118U3854	MPCB, ABB-MS132-20+HK1-12	
Acoustic hood	120Z5043	ACCOUSTIC HOOD SMALL now use (120Z5083)	

OP-MPLM028-035-044, OP-MPPM028-035-044

Housing H3

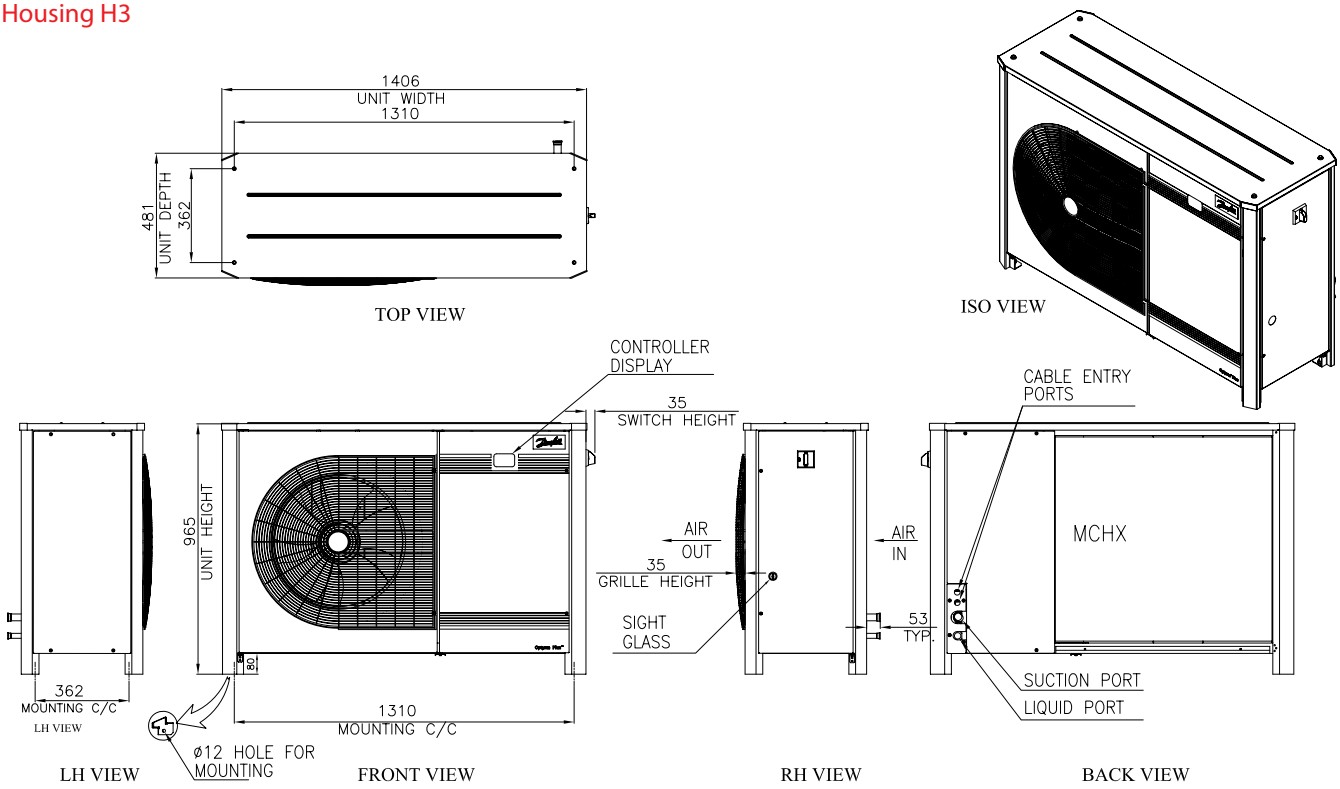

Dimensions are in (mm)

Optyma™ Plus INVERTER - Housing spare parts

OP-MPLM028-035-044, OP-MPPM028-035-044

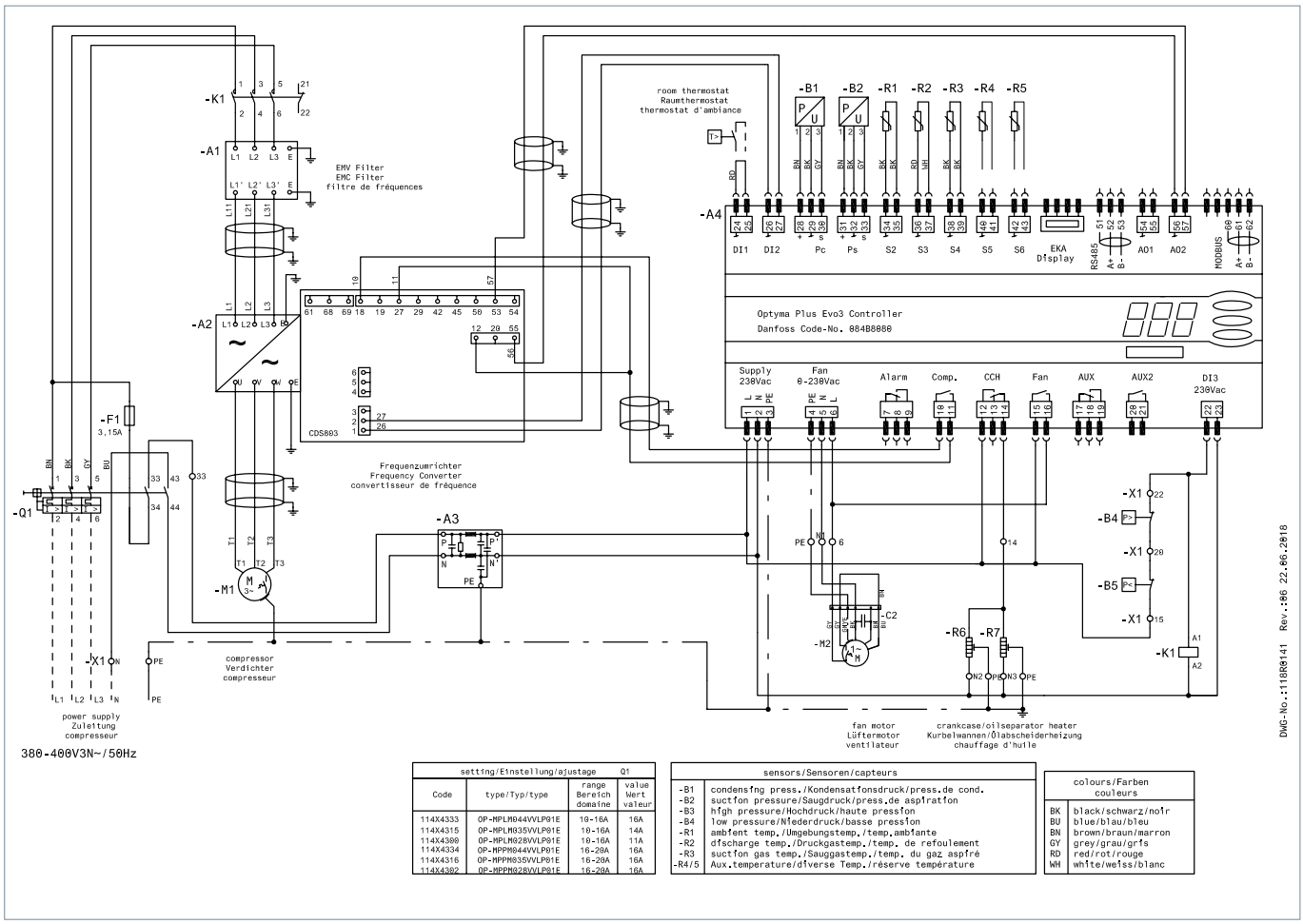

setting/Einstellung/ajustage Q1			
Code	type/Typ/type	range Bereich domaine	value Wert valeur
114X4333	OP-MPLM044VVLP01E	10-16A	16A
114X4315	OP-MPLM035VVLP01E	10-16A	14A
114X4300	OP-MPLM028VVLP01E	10-16A	11A
114X4334	OP-MPPM044VVLP01E	16-20A	16A
114X4316	OP-MPPM035VVLP01E	16-20A	16A
114X4302	OP-MPPM028VVLP01E	16-20A	16A

sensors/Sensoren/capteurs	
-B1	condensing press./Kondensationsdruck/press.de cond.
-B2	suction pressure/Saugdruck/press.de aspiration
-B3	high pressure/Hochdruck/haute pression
-B4	low pressure/Niederdruck/basse pression
-R1	ambient temp./Umgebungstemp./temp.ambiante
-R2	discharge temp./Druckgastemp./temp. de refoulement
-R3	suction gas temp./Sauggastemp./temp. du gaz aspiré
-R4/5	Aux.temperature/diverse Temp./réserve température

colours/Farben couleurs	
BK	black/schwarz/noir
BU	blue/blau/bleu
BN	brown/braun/marron
GY	grey/grau/gris
RD	red/rot/rouge
WH	white/weiss/blanc

A1 : EMC/RFI Filter (Compressor)
A2 : Frequency Converter
A3 : EMI Filter (Controls)
A4 : Optyma™ Plus Controller
B1 : Condensing Pressure Transducer
B2 : Suction Pressure Transducer
B3 : High Pressure Switch
B4 : Low Pressure Switch
C1 : Run Capacitor (Fan)
F1 : Fuse (Control Circuit)
K1 : Contactor
M1 : Compressor
M2 : Fan Motor
Q1 : Main Switch
R1 : Ambient Temp. Sensor
R2 : Discharge Temp. Sensor
R3 : Suction Temp. Sensor
R4,R5 : Auxiliary Temp. Sensor (optional)
R6 : Crankcase heater
R7 : Oil Separator Heater
S1 : Room Thermostat (optional)
X1 : Terminal
Supply : Supply
Fan : Fan
Alarm : Alarm
Comp. : Compressor
CCH : Crankcase Heater
Aux : Auxiliary

OP-MPLM028-035-044, OP-MPPM028-035-044- Emergency Wiring

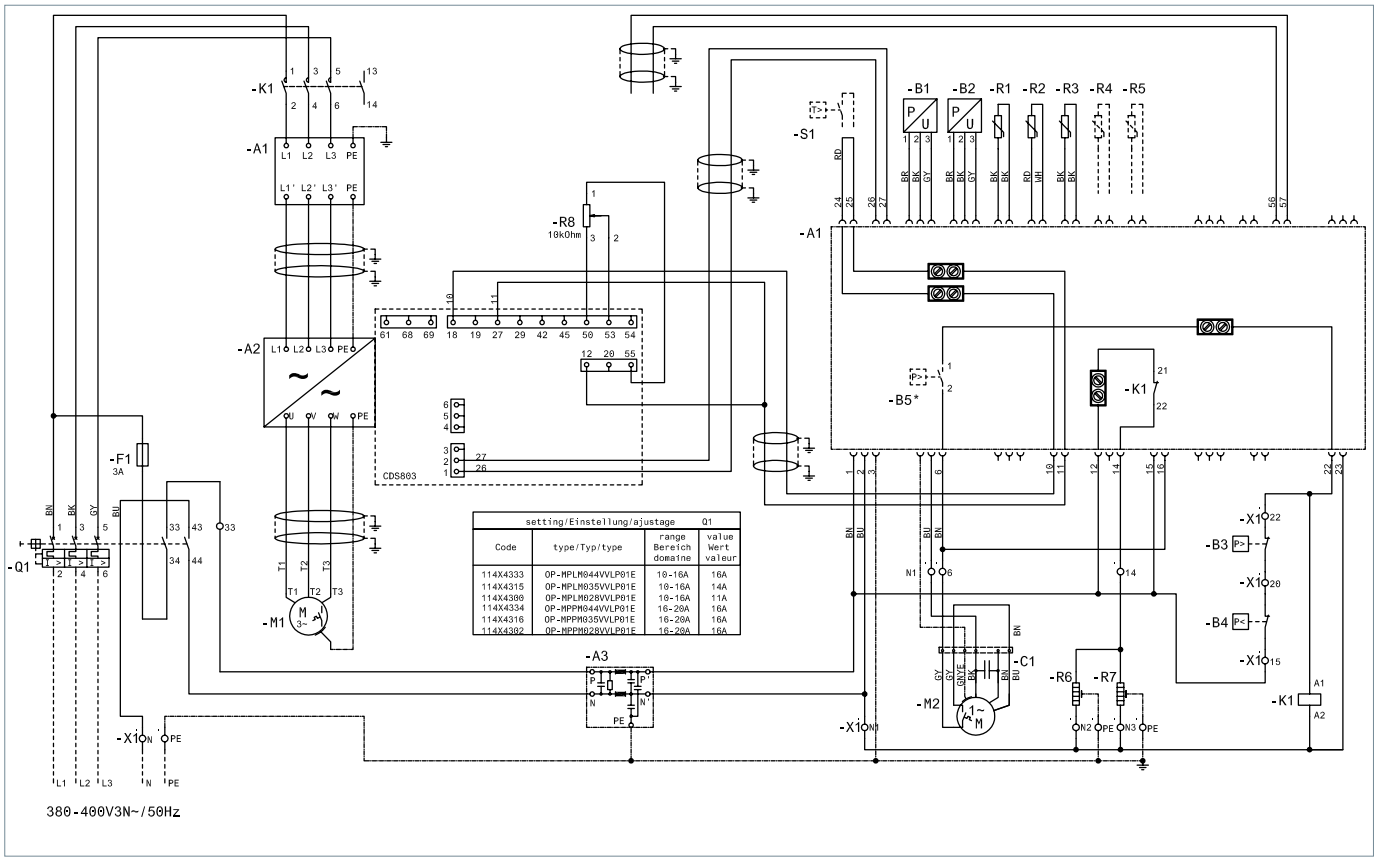

setting/Einstellung/ajustage Q1			
Code	type/Typ/type	range Bereich domaine	value Wert valeur
114X4333	OP-MPLM044VVLP01E	10-16A	16A
114X4315	OP-MPLM035VVLP01E	10-16A	14A
114X4309	OP-MPLM028VVLP01E	10-16A	11A
114X4334	OP-MPPM044VVLP01E	16-20A	16A
114X4316	OP-MPPM035VVLP01E	16-20A	16A
114X4302	OP-MPPM028VVLP01E	16-20A	16A

A1 : EMC/RFI Filter (Compressor)
A2 : Frequency Converter
A3 : EMI Filter (Controls)
A4 : Optyma™ Plus Controller
B1 : Condensing Pressure Transducer
B2 : Suction Pressure Transducer
B3 : High Pressure Switch
B4 : Low Pressure Switch
B5* : Fan Speed Controller / Pressure Switch
C1 : Run Capacitor (Fan)
F1 : Fuse (Control Circuit)
K1 : Contactor
M1 : Compressor
M2 : Fan Motor
Q1 : Main Switch
R1 : Ambient Temp. Sensor
R2 : Discharge Temp. Sensor
R3 : Suction Temp. Sensor
R4,R5 : Auxiliary Temp. Sensor (optional)
R6 : Crankcase heater
R7 : Oil Separator Heater
R8 : Compressor Speed Potentiometer
S1 : Room Thermostat (optional)
X1 : Terminal
Supply : Supply
Fan : Fan
Alarm : Alarm
Comp. : Compressor
CCH : Crankcase Heater
Aux : Auxiliary

ENGINEERING
TOMORROW

Danfoss Cooling

is a worldwide manufacturer of compressors and condensing units for refrigeration and HVAC applications. With a wide range of high quality and innovative products we help your company to find the best possible energy efficient solution that respects the environment and reduces total life cycle costs.

We have 40 years of experience within the development of hermetic compressors which has brought us amongst the global leaders in our business, and positioned us as distinct variable speed technology specialists. Today we operate from engineering and manufacturing facilities spanning across three continents.

Danfoss Turbocor Compressors

Danfoss Inverter Scrolls

Danfoss Scrolls

Danfoss Optyma™ Condensing Units

Danfoss Maneurop Reciprocating Compressors

Danfoss Light Commercial Refrigeration Compressors

Our products can be found in a variety of applications such as rooftops, chillers, residential air conditioners, heatpumps, coldrooms, supermarkets, milk tank cooling and industrial cooling processes.

www.danfoss.com

Danfoss, BP 331, 01603 Trévoux Cedex, France | +334 74 00 28 29

member of:
ASERCOM
www.asercom.org

Danfoss can accept no responsibility for possible errors in catalogues, brochures and other printed material. Danfoss reserves the right to alter its products without notice. This also applies to products already on order provided that such alterations can be made without subsequential changes being necessary in specifications already agreed.
All trademarks in this material are property of the respective companies. Danfoss and the Danfoss logotype are trademarks of Danfoss A/S. All rights reserved.

AF283343213825en-GB0301

© Danfoss | DCS (CC) | 2019.10