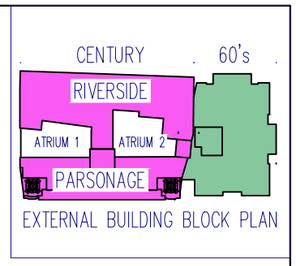

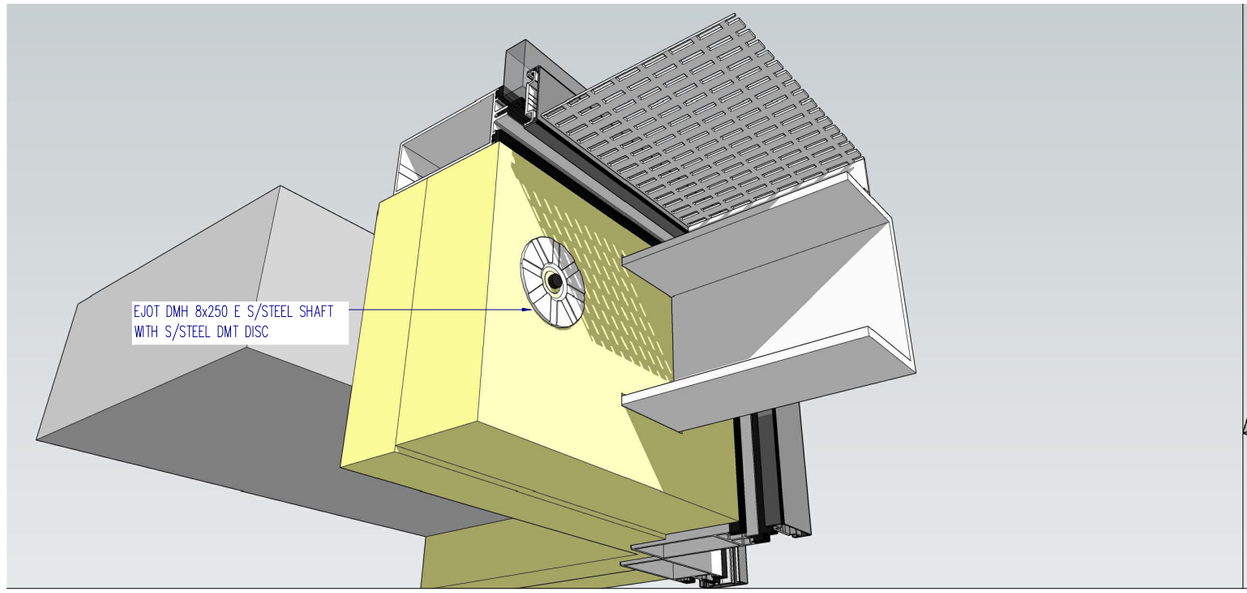

TYPICAL CURTAIN WALL SPANDREL DETAIL
STEP 1

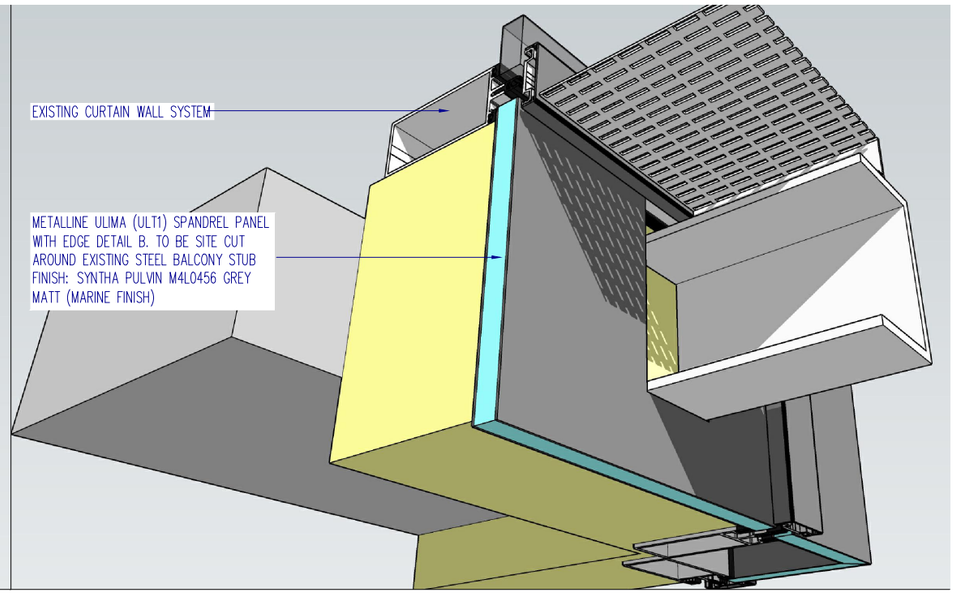

TYPICAL CURTAIN WALL SPANDREL DETAIL
STEP 2

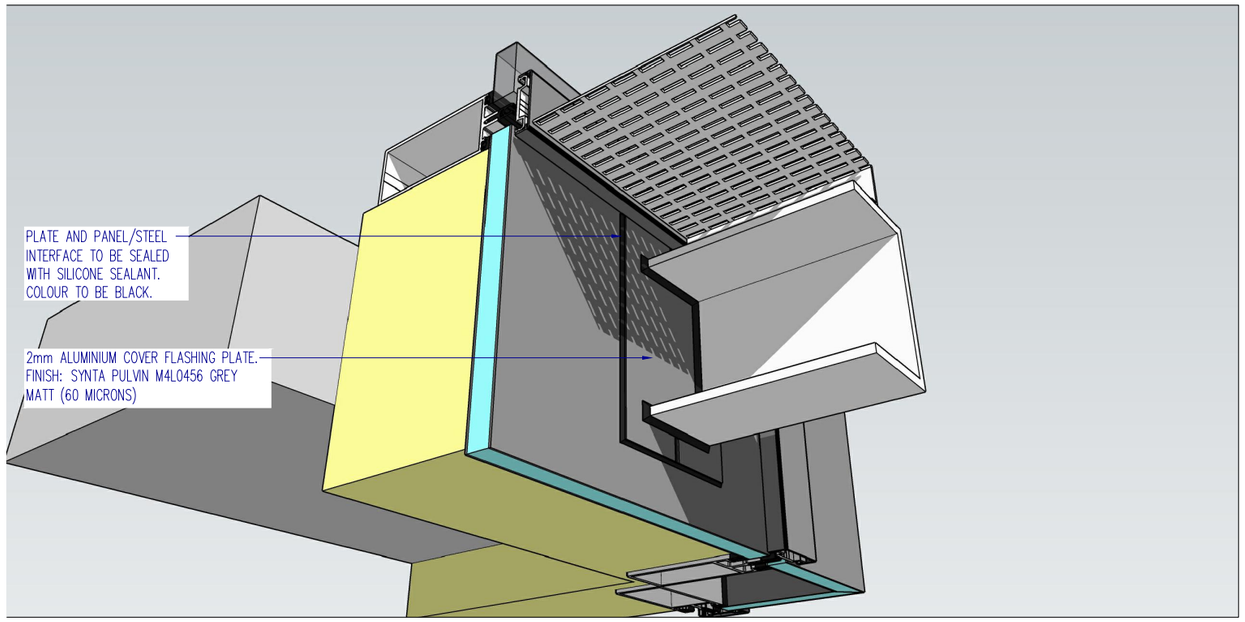

TYPICAL CURTAIN WALL SPANDREL DETAIL
STEP 3

FILL UK Ltd
UNIT 5
MEADOWBROOK INDUSTRIAL ESTATE
MAXWELL WAY,
CRAWLEY, RH10 9SA
TEL: 020 3859 0705
Email: office@fill-uk.com

NOTES:
FIXINGS ARE INDICATIVE ONLY. TO BE SPECIFIED ON WORKING DRAWINGS

REVISION:	DESCRIPTION:	DATE:	DRAWN:
P02	VIEWS UPDATED TO SUIT DESIGN CHANGES ON FILL DRAWING 2008 (P02)	31/07/23	THALL
C01	INSULATION FIXING ADDED AND ISSUED FOR CONSTRUCTION	07/08/23	THALL
C02	INSULATION FIXING ALTERED	02/10/23	THALL

PROJECT NAME:
CENTURY BUILDINGS, MANCHESTER

PROJECT NUMBER:
20-M254

CLIENT:
CREST NICHOLSON

DRAWING TITLE:
SYSTEM DRAWINGS
BALCONY PENETRATION DETIAL
3D VIEWS

DRAWING SCALE: 1:4
DRAWING SHEET: A3
DRAWN BY: T HALL
DRAWN DATE: 24/04/2023

DRAWING NUMBER:
M254- FILL-60-ZZ-DR-W-2009
PROJECT | ORIGINATOR | VOLUME | LEVEL | TYPE | ROLE | NUMBER

REVISION: C02